(12) INTERNATIONAL APPLICATION PUBLISHED UNDER THE PATENT COOPERATION TREATY (PCT)

(19) World Intellectual Property Organization
International Bureau

(43) International Publication Date
24 May 2007 (24.05.2007)

PCT

(10) International Publication Number
WO 2007/057675 A2

(51) International Patent Classification:
B62B 3/06 (2006.01)

(21) International Application Number:
PCT/GB2006/004281

(22) International Filing Date:
16 November 2006 (16.11.2006)

(25) Filing Language: English

(26) Publication Language: English

(30) Priority Data:
11/281,139 18 November 2005 (18.11.2005) US

(71) Applicant and
(72) Inventor: COOPER, David [GB/GB]; 15 Shelley Drive, Broadbridge Heath, Horsham, West Sussex RH12 3NU (GB).

(74) Agent: BRIFFA; Business Design Centre, Islington, London N1 OQH (GB).

(81) Designated States *(unless otherwise indicated, for every kind of national protection available):* AE, AG, AL, AM, AT, AU, AZ, BA, BB, BG, BR, BW, BY, BZ, CA, CH, CN, CO, CR, CU, CZ, DE, DK, DM, DZ, EC, EE, EG, ES, FI, GB, GD, GE, GH, GM, GT, HN, HR, HU, ID, IL, IN, IS, JP, KE, KG, KM, KN, KP, KR, KZ, LA, LC, LK, LR, LS, LT, LU, LV, LY, MA, MD, MG, MK, MN, MW, MX, MY, MZ, NA, NG, NI, NO, NZ, OM, PG, PH, PL, PT, RO, RS, RU, SC, SD, SE, SG, SK, SL, SM, SV, SY, TJ, TM, TN, TR, TT, TZ, UA, UG, US, UZ, VC, VN, ZA, ZM, ZW

(84) Designated States *(unless otherwise indicated, for every kind of regional protection available):* ARIPO (BW, GH, GM, KE, LS, MW, MZ, NA, SD, SL, SZ, TZ, UG, ZM, ZW), Eurasian (AM, AZ, BY, KG, KZ, MD, RU, TJ, TM), European (AT, BE, BG, CH, CY, CZ, DE, DK, EE, ES, FI, FR, GB, GR, HU, IE, IS, IT, LT, LU, LV, MC, NL, PL, PT, RO, SE, SI, SK, TR), OAPI (BF, BJ, CF, CG, CI, CM, GA, GN, GQ, GW, ML, MR, NE, SN, TD, TG).

Published:
— *without international search report and to be republished upon receipt of that report*

For two-letter codes and other abbreviations, refer to the "Guidance Notes on Codes and Abbreviations" appearing at the beginning of each regular issue of the PCT Gazette.

(54) Title: PALLET TRUCK

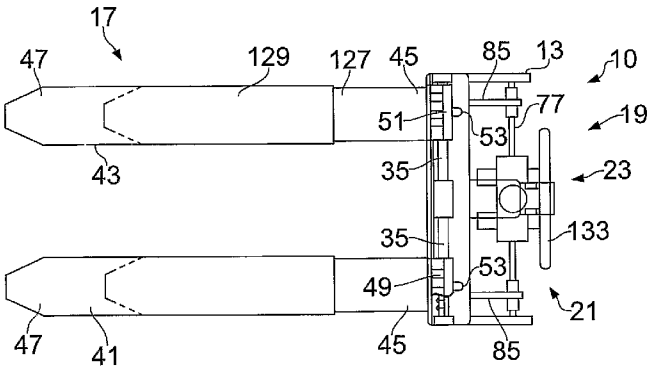

(57) Abstract: A pallet truck with manually adjustable mechanisms for adjusting the length and lateral spacing of opposing first and second fork elements and comprising fork-displacing means structured to selectively and separately allow lateral displacement of the first and second fork elements relative to each other, and each fork element comprising first and second telescopically slidable fork portions, with a mechanism for fixing the telescopic portions at selected positions.

WO 2007/057675 A2

PALLET TRUCK

Field of the Invention .

The present invention relates to pallet trucks.

Background Art .

A pallet truck is commonly understood as a non-stacking lift truck with a lifting device and a fork-type load carrier for raising a load off the floor for the horizontal transport of pallets, lattice boxes etc. An operator pushes the forks into the opening on the pallet and jacks a lift mechanism so as to raise the pallet off the floor. Once lifted, the load can be manually moved from place to place .

A problem with pallet trucks is that they are usually designed for use with just a single size of pallet, whereas it is often required to lift pallets and other objects of different dimensions.

It is known to provide pallet trucks with a mechanism for adjusting the lateral distance between the two forks: see GB Patents 978,969, 729,461, EP-A-0509976, US-A-2004/0013505 .

DE-A-3125384 discloses an attachment for a motorised forklift truck, having two prongs, wherein the lateral distance between the prongs and the length of the prongs are simultaneously modifiable. However the mechanism employed is a complex hydraulic mechanism, which would not be suitable for a

hand operated pallet truck.

Further improvements in adjustability of pallet trucks are therefore desirable.

Summary of the Invention

In a first aspect, the present invention provides a pallet truck, comprising first and second fork elements, actuator means for selectively raising and lowering the fork elements relative to a support surface, a first manually operable means for adjusting the lateral spacing between the fork elements, and

wherein each fork element comprises first and second elongate fork portions slidable relatively to each other for adjusting the length of the fork element, and including second manually operable means for securing the first and second elongate fork portions in a desired relative position.

In a second aspect, the present invention provides a pallet truck, comprising:

(a) frame means, including a steering wheel-mounting mechanism having an axis and a fork-supporting means;

(b) a steering wheel unit mounted to the steering wheel-mounting mechanism to pivot about said axis;

(c) a fork unit mounted to the fork-supporting means, the fork unit including opposing first and second fork elements, each having a fork front end and a fork rear

end;

(d) fork-displacing means mounted to the frame means, the fork-displacing means structured to selectively and separately allow lateral displacement of the first and second fork elements relative to each other;

(e) wherein each of the first and second fork elements includes: a first fork portion, a second fork portion, and fastening means, wherein the first and second fork portions are telescopically slidable longitudinally relative to each other, and wherein the fastening means selectively fixes the respective overall length of the first fork portion in combination with the second fork portion; and

(f) actuator means mounted on the frame means; the actuator means including supporting wheel means structured to suspend the frame means a selected elevation above an underlying supporting surface; the actuator means being structured to selectively and vertically displace the first and second fork elements relative to the underlying supporting surface.

In a preferred embodiment, said fork-displacing means and said fastening means are each manually adjustable. Whilst various forms of adjustment mechanism may be envisaged, in general, such adjustment mechanism may comprise a first structural member slidable relative to a second elongate structural member, and locating means for fixing the first

structural member in any of a plurality of predetermined positions relative to the second member. The locating means may for example comprise a worm gear, or where the first member is elongate, tubes or grooves, which grip both first and second members. A preferred locating mechanism includes one or more elongate elements, such as lugs, pins or bolts engaging in selected apertures of rows of apertures or throughbores in said first and second structural members .

In a preferred embodiment, the pallet truck of the invention comprises frame means, a steering wheel unit, a fork unit, fork-displacing means, and actuator means.

The frame means includes a steering wheel-mounting mechanism having a vertically oriented axis, a fork-supporting means, and a horizontally oriented crossbar with an upper surface and with two sets of vertically oriented throughbores wherein the fork-supporting means includes: a horizontally oriented support element, first and second vertically oriented supporting elements suspended from the horizontally oriented support element, the first and second vertically oriented supporting elements being fixedly connected to the fork front end of a respective one of hereinafter described first and second fork elements, each of the vertically oriented supporting elements including a horizontally oriented plate having at least one throughbore, each plate being spaced adjacently to the upper surface of the crossbar wherein the at least one throughbore is

alignable with a selected throughbore of a respective one of the two sets of throughbores, and a pair of pins, each removably insertable through the at least one throughbore of a respective one of the plates and through an aligned selected throughbore of a respective one of the two sets of throughbores to thereby selectively lock the lateral spacing of the hereinafter described first and second fork elements relative to each other.

The steering wheel unit is mounted to the steering wheel-mounting mechanism to pivot about the vertically oriented axis.

The fork unit, which is mounted to the fork-supporting means, includes opposing first and second fork elements, each having a fork front end and a fork rear end, wherein each of the opposing first and second fork elements includes a first fork portion, a second fork portion, and fastening means, and wherein the first and second fork portions are telescopically slidable longitudinally relative to each other, and wherein the fastening means selectively fixes the respective overall length of the first fork portion in combination with the second fork portion.

The fork-displacing means, which is mounted to the frame means, is structured to selectively and separately allow lateral displacement of the first and second fork elements relative to each other. The fork-displacing means includes the first and second vertically oriented supporting elements being slidably mounted on the horizontally oriented support element to thereby allow the first and second fork elements to be horizontally and laterally displaced relative to each other. The fork-displacing

means further includes a pair of displacing handles, one mounted on each of the first and second vertically oriented supporting elements .

The actuator means, which is mounted to the frame means, includes supporting wheel means having opposing supporting wheels which, in cooperation with the steering wheel unit, is structured to selectively and vertically displace and suspend the first and second fork elements at a selected elevation above an underlying supporting surface; a horizontally oriented axle; a hydraulic cylinder structured to selectively rotate the horizontally oriented axle, and a linkage arrangement connecting the horizontally oriented axle to the opposing supporting wheels . The linkage arrangement includes a pair of first lever arms, each having a proximal end and a distal end; a pair of second lever arms, each having a proximal end and a distal end; a pair of third lever arms , each having a proximal end and a distal end; a pair of fourth lever arms, each having a proximal end and a distal end; and a pair of elongate links, each having a proximal end and a distal end, and each including a first link portion, a second link portion, and fastening means wherein the first and second link portions are slidable longitudinally relative to each other, and wherein the fastening means selectively fixes the respective overall length of the first link portion in combination with the second link portion, and wherein the proximal end of the first lever arm is longitudinally slidable along, but not radially pivotal about,

the horizontally oriented axle; the distal end of the first lever arm is fixedly secured to the proximal end of the second lever arm, the distal end of the first lever arm and the proximal end of the second lever arm are pivotally connected to the frame means, the distal end of the third lever arm is fixedly secured to the proximal end of the fourth lever arm, the distal end of the third lever arm and the proximal end of the fourth lever arm are pivotally secured to a respective one of the first and second fork elements, each of the opposing supporting wheels is rotationally secured to the distal end of a respective one of the fourth lever arms, the relative lengths of the first and second lever arms and the angular relationship therebetween, and the relative lengths of the third and fourth lever arms and the angular relationship therebetween and relative to the lengths and angular relationship of the first and second lever arms are dimensioned such that the elevation of the fork front ends of the first and second fork elements above an underlying supporting surface is always substantially equal to the elevation of the fork rear ends of the first and second fork elements above the underlying supporting surface, and the proximal end of each of the elongate links is pivotally connected to the distal end of a respective one of the second lever arms and the distal end of each of the elongate links is pivotally connected to the proximal end of a respective one of the third lever arms .

A main handle is pivotally mounted to the steering wheel-

mounting mechanism about a horizontally oriented axis, the main handle being structured to activate the hydraulic cylinder by a pumping up and down movement by the operator. A biasing mechanism is structured to bias the main handle to an upright position, and a release mechanism structured to cause the hydraulic cylinder to allow the horizontally oriented axle to freely rotate such that the first and second fork elements return to their lowermost positions.

In an alternative embodiment, the actuator mechanism may include an electric power unit to provide the necessary power to move and actuate the pallet truck as aforesaid.

Brief Description Of The Drawings

A preferred embodiment of the invention will now be described with reference to the accompanying drawings:

Fig. 1 is a side elevation view of a pallet truck in accordance with the present invention.

Fig. 2 is a top plan view of the pallet truck.

Fig. 3 is an end elevation view of the pallet truck.

Fig. 4 is an enlarged and fragmentary, side elevation and cross-sectional view of a vertically oriented supporting element, a horizontally oriented plate, and a pin of the pallet truck.

Fig. 5 is a fragmentary top plan view of the pallet truck showing first and second fork elements thereof displaced inwardly toward each other to accommodate a narrow skid, and

also showing the first and second fork elements retracted to accommodate a short skid.

Fig. 6 is a fragmentary top plan view of the pallet truck showing the first and second fork elements thereof displaced outwardly away from each other to accommodate a wide skid, and also showing the first and second fork elements extended to accommodate a long skid.

Fig. 7 is a fragmentary side elevation view with parts removed for purposes of clarity, showing the pallet truck lowered relative to an underlying supporting surface.

Fig. 8 is a fragmentary side elevation view with parts removed for purposes of clarity, showing the pallet truck elevated relative to an underlying supporting surface.

Fig. 9 is an enlarged and fragmentary top plan view with portions cut away to reveal details of a fastening means of one of the fork elements of the pallet truck, in accordance with the present invention.

Detailed Description Of The Preferred Embodiment

As shown in Figs. 1 through 9, a pallet truck 10 includes frame means 13, a steering wheel unit 15, a fork unit 17, fork-displacing means 19, and actuator means 21.

The frame means 13 includes a steering wheel-mounting mechanism 29 having a vertically oriented axis 31 and a fork-supporting means 33, which includes a horizontally oriented support element 35 and a horizontally oriented crossbar 37. The

steering wheel unit 15 is mounted to the steering wheel-mounting mechanism 29 to pivot about the vertically oriented axis 31.

The fork unit 17 is mounted on the fork-supporting means 33 and includes opposing first and second fork elements 41, 43, each having a fork front end 45 and a fork rear end 47. The fork-supporting means 31 includes first and second vertically oriented supporting elements 49, 51, which are suspended from the horizontally oriented support element 35 and which are fixedly connected to the fork front end 45 of a respective one of the first and second fork elements 41, 43.

The fork-displacing means 19 includes the first and second vertically oriented supporting elements 49, 51 being slidably mounted on the horizontally oriented support element 35 to thereby selectively and separately allow horizontal lateral displacement of the first and second fork elements 41, 43 relative to each other. Figs. 1, 3 and 5 show the first and second fork elements 41, 43 moved inwardly toward each other in order to accommodate a narrow skid, and Fig. 6 shows the first and second fork elements 41, 43 displaced outwardly away from each other in order to accommodate a wide skid. The fork-displacing means 19 includes a pair of displacing handles 53, one mounted on each of the first and second vertically oriented supporting elements 49, 51 for slidably displacing the respective first and second vertically oriented supporting elements 49, 51 horizontally along the horizontally oriented support element 35.

Each of the first and second vertically oriented supporting elements 49, 51 has a horizontally oriented plate 55 spaced adjacently to an upper surface 57 of the crossbar 37. Each of the plates 55 has one throughbore 59 that can be aligned with selected ones of corresponding sets of four vertically oriented throughbores 63, 65 through the crossbar 37. A pair of pins 67 are removably inserted through bores 59 and through selected ones of the sets of bores 63, 65, to thereby selectively lock the lateral spacing of the first and second fork elements 41, 43 relative to each other.

An actuator means 21 is mounted on the frame means 13 and includes supporting wheel means 71 which, in cooperation with the steering wheel unit 15, is structured to suspend the first and second fork elements 41, 43 at a selected elevation above an underlying supporting surface 73. The actuator means 21 is structured to selectively and vertically displace the first and second fork elements 41, 43 relative to the underlying supporting surface 73.An hydraulic cylinder is structured to selectively rotate a horizontally oriented axle 77, the supporting wheel means 71 which includes opposing supporting wheels 81, and a linkage arrangement 83. The linkage arrangement 83 includes a pair of first lever arms 85, each having a proximal end 87 and a distal end 89, and a pair of second lever arms 91, each having a proximal end 93 and a distal end 95. The distal end 89 of each first lever arm 85 is fixedly secured to the proximal end 93 of the respective second lever

arm 91. The proximal end 87 of each first lever arm 85 is longitudinally slidable along, the horizontally oriented axle 77. The cross-section of the axle 77 is circular to permit rotation of the first lever arms 85 relative to the axle 77. The distal end 89 of each first lever arm 85 and the proximal end 93 of the respective second lever arm 91 are pivotally connected to the frame means 13 about an axis 97.

The linkage arrangement 83 also includes a pair of third lever arms 101, each having a proximal end 103 and a distal end 105, and a pair of fourth lever arms 107, each having a proximal end 109 and a distal end 111. The distal end 105 of each third lever arm 101 is fixedly secured to the proximal end 109 of the respective fourth lever arm 107. The distal end 105 of each third lever arm 101 and the respective proximal end 109 of the fourth lever arm 107 are pivotally secured to a respective one of the first and second fork elements 41, 43 about an axis 113. Each of the opposing supporting wheels 81 is rotationally secured to the distal end 111 of a respective one of the fourth lever arms 107 .

The relative lengths of the first and second lever arms 85, 91 and the angular relationship therebetween, and the relative lengths of the third and fourth lever arms 101, 107 and the angular relationship therebetween and relative to the lengths and angular relationship of the first and second lever arms 85, 91, are dimensioned such that the elevation of the fork front ends 45 of the first and second fork elements 41, 43 above the underlying

supporting surface 73 is always substantially equal to the elevation of the fork rear ends 47 of the first and second fork elements 41, 43 above the underlying supporting surface 73.

Referring to Figures 7, 8 and 9, the linkage arrangement 83 further includes a pair of elongate links 115, each having a proximal end 117 and a distal end 119. The proximal end 117 of each of the elongate links 115 is pivotally connected to the distal end 95 of a respective one of the second lever arms 91, and the distal end 119 of each of the elongate links 115 is pivotally connected to the proximal end 103 of a respective one of the third lever arms 101. Each elongate link 115 comprises a first link portion 121 and a second link portion 123 that are slidable longitudinally relative to each other. A fastening means 125, including a bolt through appropriately spaced throughbores, selectively fixes the respective overall length of the elongate links 115, and at the same time selectively fixes the respective overall length of the respective first or second fork element 41, 43, by reason of the outer end of link portion 123 being fixed at pivot 113 to element 41, 43. Each of the first and second fork elements 41, 43 comprises a first fork portion 127 and a second fork portion 129 that are telescopically slidable longitudinally relative to each other in four positions, by reason of fastening means 125, one fastening means 125 being provided for each fork element. Referring to Figure 9, fastening means 125 comprises a block 131 secured to the end of first link 121, and engaged within an inner recess

124 of first fork portion 127. Block 131 includes two bores 126 receiving bolts 128 for locking together links 121, 123 via registering apertures 130, 132. Bolts 128 are accessible via registering apertures 134 in outer fork portion 129. It may be seen that adjustment of the length of links 121, 123, by-screwing bolts 128 into selected apertures 130, 132 will cause concomitant adjustment of the length of fork elements 41, 43, by reason of the outer end of link 123 being coupled at pivot 113 to fork portion 129 .

A main handle 133 is pivotally mounted to the steering wheel-mounting mechanism 29 about a horizontally oriented axis 135. A biasing mechanism 137, such as a compression coil spring 139, is structured to bias the handle 133 to an upright position, as shown in Fig. 1. A release mechanism 141 is structured to cause the hydraulic cylinder 75 to allow the horizontally oriented axle 77 to freely rotate such that the first and second fork elements 41, 43 return to their lowermost positions, as shown in Figs. 1 and 7.

In operation, the fastening means 125, is used to adjust the lengths of the elongate links 115 and the lengths of the first and second fork elements 41, 43 to accommodate the lengths of short skids (see Fig. 5) and long skids (see Fig. 6) to be handled by the pallet-lifting apparatus 10. Similarly, the pins 67 are temporarily removed from the bores 59, 63, 65 to adjust the distance between the first and second fork elements 41, 43 by pulling or pushing on the displacing handles 53, thereby

sliding the proximal ends 87 of the first lever arms 85 along the axle 77 in order to accommodate the widths of narrow skids (see Fig. 5) and wide skids (see Fig. 6) to be handled by the pallet-lifting apparatus 10. With the elevation of the first and second fork elements 41, 43 in their lowermost position (see Figs. 1 and 7) and using the main handle 133 to steer and maneuver the first and second fork elements 41, 43 into the void of a skid to be handled by the pallet-lifting apparatus 10, the release mechanism 141 is closed, and the main handle 133 is pumped up and down, causing the hydraulic cylinder 75 to rotate the horizontally oriented axle 77, thereby elevating the first and second fork elements 41, 43 and accordingly lifting the skid clear of the underlying supporting surface 73 (see Fig. 8). After the skid has been relocated as desired, the release mechanism 141 is opened, allowing the first and second skid elements 41, 43 to return to their lowermost positions. The main handle 133 is then used to pull the pallet-lifting apparatus 10 from the void of the skid.

It is to be understood that while certain forms of the present invention have been illustrated and described herein, it is not to be limited to the specific forms or arrangements of parts described and shown.

CLAIMS

1. A pallet truck, comprising first and second fork elements, actuator means for selectively raising and lowering the fork elements relative to a support surface, a first manually operable means for adjusting the lateral spacing between the fork elements, and

wherein each fork element comprises first and second elongate fork portions slidable relatively to each other for adjusting the length of the fork element, and including second manually operable means for securing the first and second elongate fork portions in a desired relative position.

2. A pallet truck according to claim 1, wherein said first and/or said second manually operable means includes one or projecting elements for securing in registering apertures of rows of apertures formed in structural portions of said fork elements .

3. A pallet truck according to claim 2, including first and second elongate and relatively slidable linkage arms located within each fork element, and each linkage arm including a row of apertures so that apertures in each row

may register with one another.

4. A pallet truck according to claim 2 or claim 3, wherein each fork element includes a fork support member suspended on a cross bar, and said first manually operable means includes one or projecting elements for securing in registering apertures formed in said fork support member and said crossbar.

5. A pallet truck, comprising:

(a) frame means, including a steering wheel-mounting mechanism having an axis and a fork-supporting means,-

(b) a steering wheel unit mounted to the steering wheel-mounting mechanism to pivot about said axis;

(c) a fork unit mounted to the fork-supporting means, the fork unit including opposing first and second fork elements, each having a fork front end and a fork rear end;

(d) fork-displacing means mounted to the frame means, the fork-displacing means structured to selectively and separately allow lateral displacement of the first and second fork elements relative to each other;

(e) wherein each of the first and second fork elements includes: a first fork portion, a second fork portion, and fastening means, wherein the first and second fork portions are telescopically slidable longitudinally

relative to each other, and wherein the fastening means selectively fixes the respective overall length of the first fork portion in combination with the second fork portion; and

(f) actuator means mounted on the frame means and including supporting wheel means structured to suspend the frame means a selected elevation above an underlying supporting surface; the actuator means being structured to selectively and vertically displace the first and second fork elements relative to the underlying supporting surface.

6. A pallet truck as claimed in claim 5, wherein the fork-supporting means includes:

(a) a transverse support element, and

(b) first and second fork supporting elements suspended from the horizontally oriented support element, the first and second fork supporting elements being fixedly connected to the fork front end of a respective one of the first and second fork elements.

7. A pallet truck as claimed in claim 6, wherein the fork-displacing means includes the first and second fork supporting elements being slidably mounted on the transverse support element to thereby allow the first and second fork elements to be laterally displaced relative to each other.

8. A pallet truck as claimed in claim 7, wherein:

(a) the frame means includes a transverse crossbar with an upper surface and with two sets of throughbores;

(b) each of the fork supporting elements includes a plate having at least one throughbore, each plate being spaced adjacently to the upper surface of the crossbar wherein the at least one throughbore is alignable with a selected throughbore of a respective one of the two sets of throughbores; and

(c) a pair of pins, each removably insertable through the at least one throughbore of a respective one of the plates and through an aligned selected throughbore of a respective one of the two sets of throughbores to thereby selectively lock the lateral spacing of the first and second fork elements relative to each other.

9. A pallet truck as claimed in any of claims 5 to 8, comprising:

(a) an axle;

(b) a hydraulic cylinder structured to selectively rotate the axle; and

(c) a linkage arrangement connecting the axle to the opposing supporting wheel means.

10. A pallet truck as claimed in claim 9, wherein the linkage

arrangement includes :

(a) a pair of first lever arms, each having a proximal end and a distal end;

(b) a pair of second lever arms, each having a proximal end and a distal end;

(c) a pair of elongate links extending along the length of said fork elements, each having a proximal end and a distal end; and

(d) wherein

(1) the proximal end of the first lever arm is longitudinally slidable along, and pivotal about, said axle,

(2) the distal end of the first lever arm is fixedly-secured to the proximal end of the second lever arm,

(3) the distal end of the first lever arm and the proximal end of the second lever arm are pivotally connected to the frame means, and

(4) the proximal end of each of the elongate links is pivotally connected to the distal end of a respective one of the second lever arms

11. A pallet truck according to claim 10, further including

(e) a pair of third lever arms, each having a proximal end and a distal end;

(f) a pair of fourth lever arms, each having a proximal end and a distal end; and

(g) wherein

(1) the distal end of the third lever arm is fixedly secured to the proximal end of the fourth lever arm,

(2) the distal end of the third lever arm and the proximal end of the fourth lever arm are pivotally secured to a respective one of the first and second fork elements,

(3) the opposing supporting wheel means is rotationally secured to the distal end of a respective one of the fourth lever arms,

(4) the relative lengths of the first and second lever arms and the angular relationship therebetween, and the relative lengths of the third and fourth lever arms and the angular relationship therebetween and relative to the lengths and angular relationship of the first and second lever arms are dimensioned such that the elevation of the fork front ends of the first and second fork elements above an underlying supporting surface is always generally equal to the elevation of the fork rear ends of the first and second fork elements above the underlying supporting surface, and

(5) the distal end of each of the elongate links is pivotally connected to the proximal end of a respective one of the third lever arms.

12. A pallet truck as claimed in claim 10 or 11, wherein each elongate link includes:

(a) a first link portion;

(b) a second link portion;

(c) fastening means; and

(d) wherein the first and second link portions are slidable longitudinally relative to each other, and wherein the fastening means selectively fixes the respective overall length of the first link portion in combination with the second link portion.

13. A pallet truck according to any of claims 5 to 12, wherein said fastening means is manually adjustable, includes at least one projecting element engaging in selected registering apertures of rows of apertures.

14 A pallet truck according to claim 13, wherein said actuator means includes a respective linkage mechanism extending the length of each of said fork elements, and including first and second link portions, said fastening means being arranged for adjusting the length of the linkage mechanism, and said linkage mechanism being fixed to a said fork element for causing

concomitant adjustment of length of the fork element .

15. A pallet truck as claimed in claim 5, including:

(a) a main handle pivotally mounted to the steering wheel-mounting mechanism about a horizontally oriented axis, the main handle being structured to activate an hydraulic cylinder; and

(b) a release mechanism structured to cause the hydraulic cylinder to allow the horizontally oriented axle to freely rotate such that the first and second fork elements return to their lowermost positions.

16. A pallet truck as claimed in claim 15, further comprising a biasing mechanism structured to bias the main handle to an upright position.

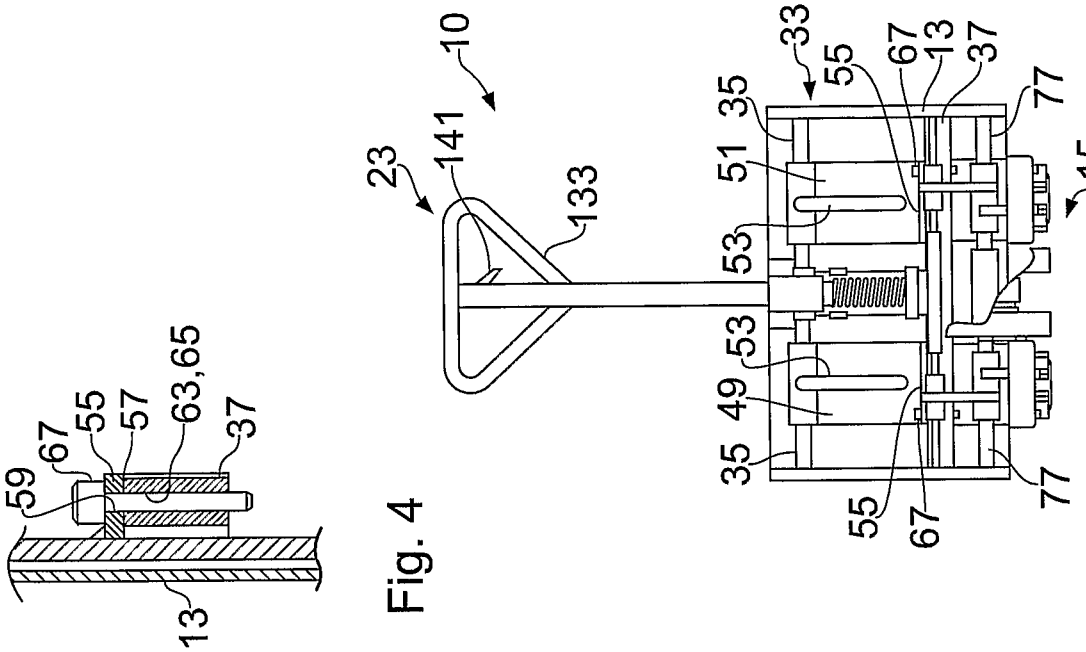

Fig. 3

Fig. 4

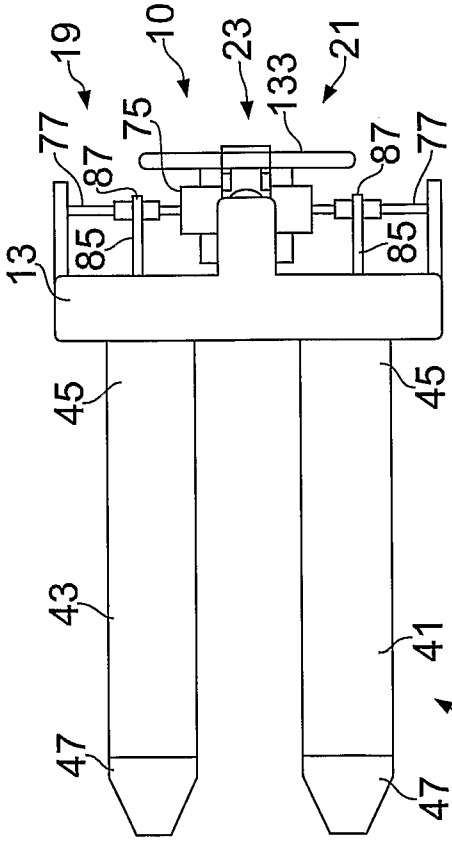

Fig. 2

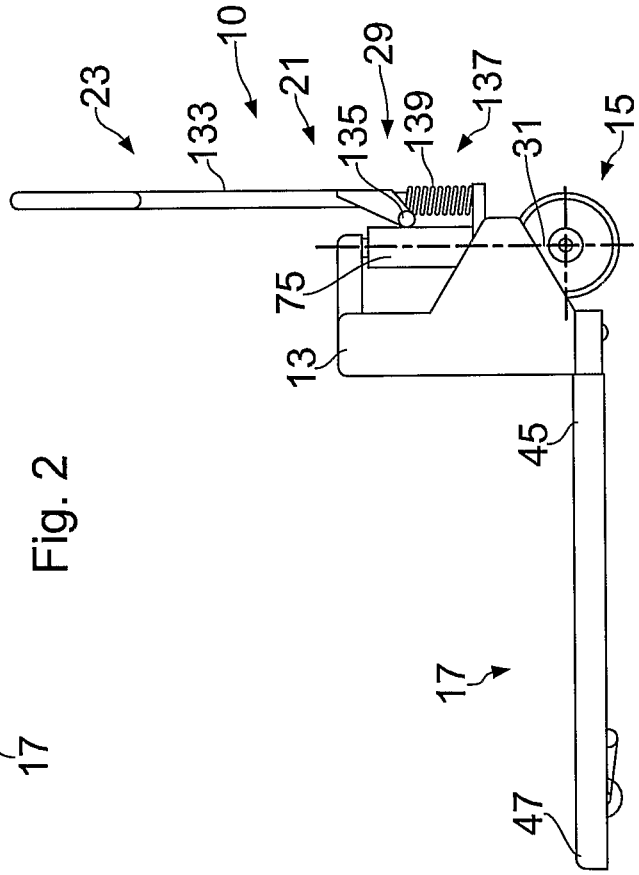

Fig. 1

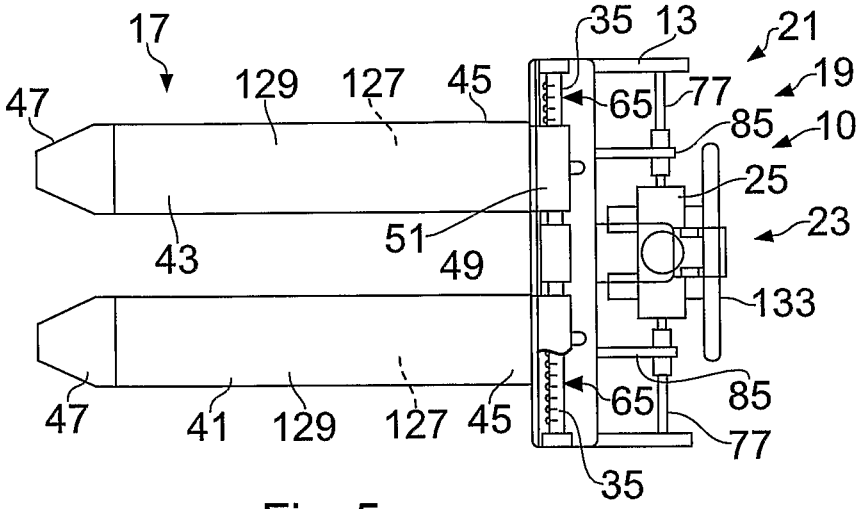

Fig. 5

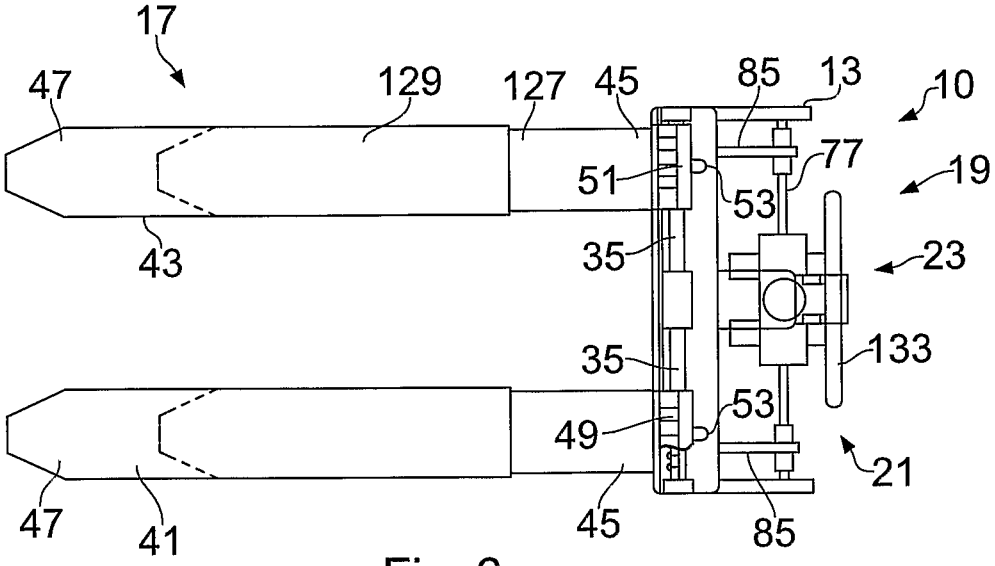

Fig. 6

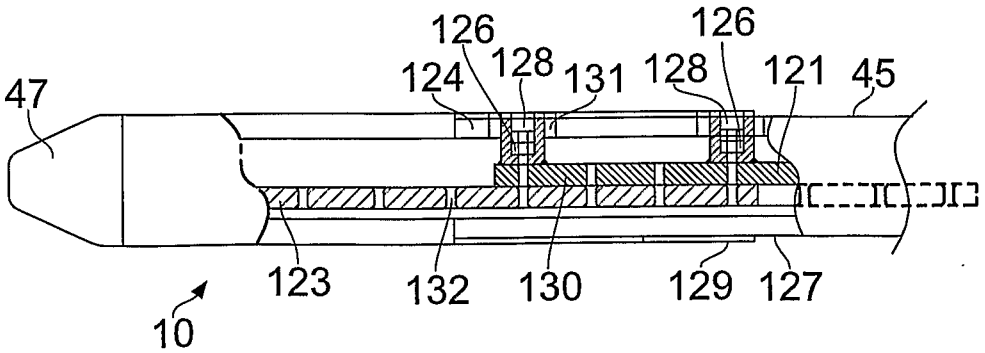

Fig. 9

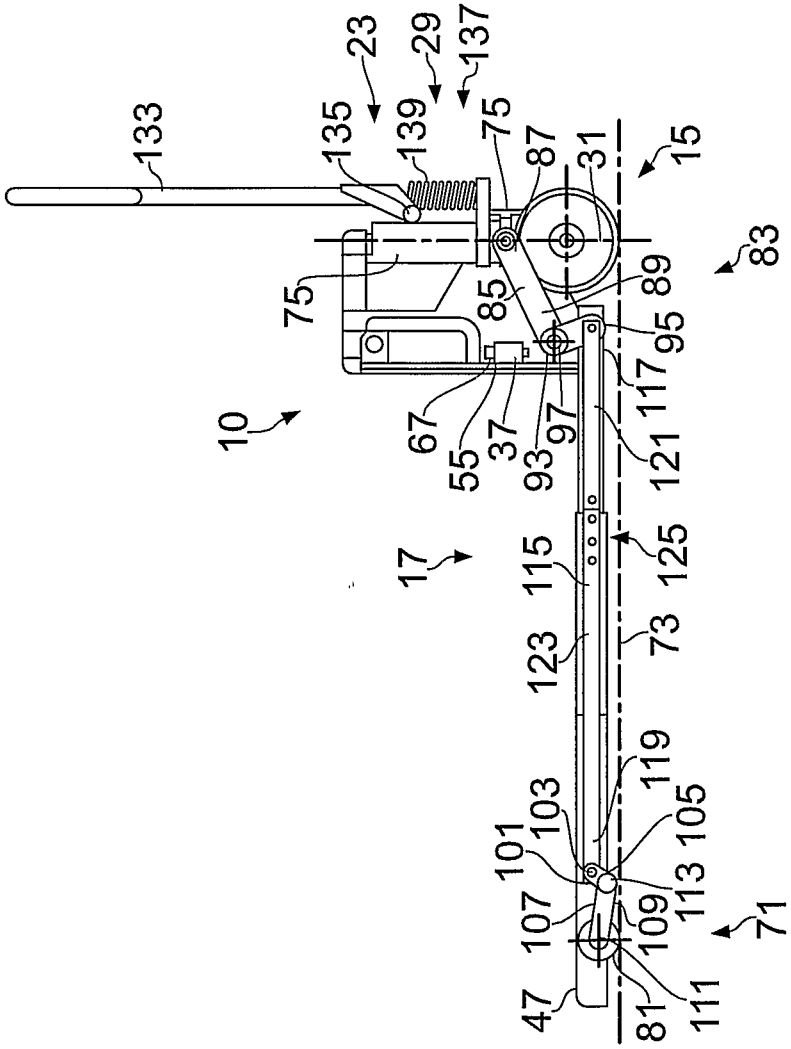
10
133
135
23
139
29
137
75
87
31
15
83
89
85
95
117
121
125
73
123
119
105
113
101
103
109
111
71
81
47
107
97
93
37
55
67
17
115

Fig. 7

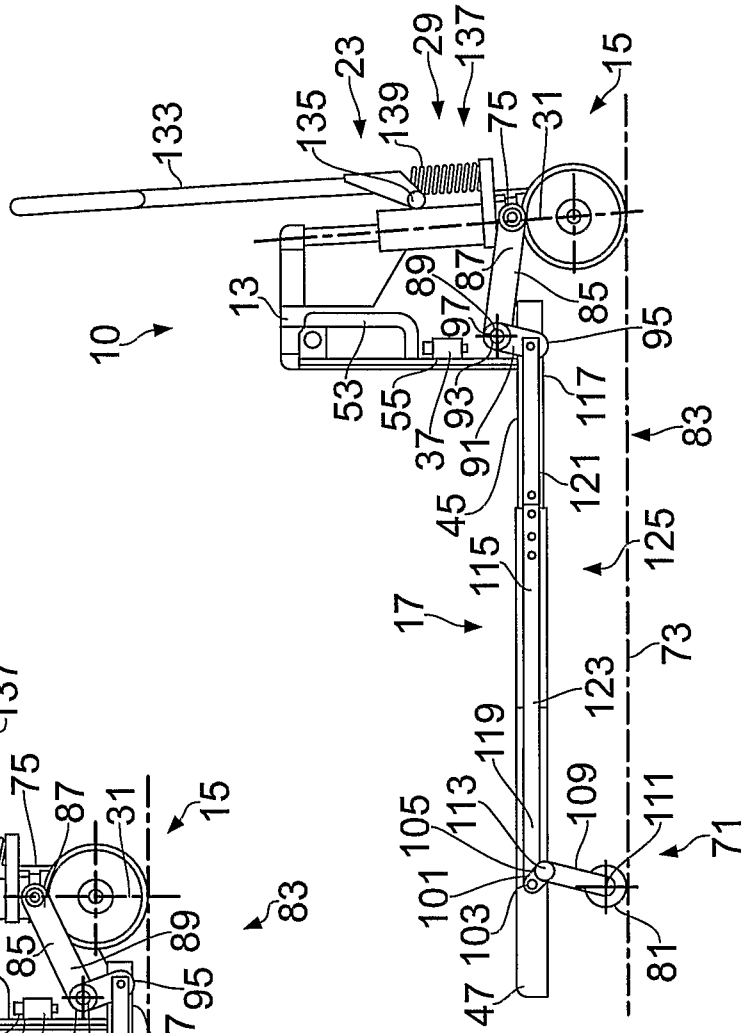
10
133
135
23
139
29
137
75
31
15
13
89
87
97
85
95
53
55
37
93
91
117
83
45
121
125
115
17
73
123
119
105
113
101
103
109
111
71
81
47

Fig. 8