United States Patent [19]

Lucas

[11] **3,743,198**

[45] **July 3, 1973**

[54] **APPARATUS FOR HANDLING ROLLS OF STRIP MATERIAL FOR UNROLLING THEREOF**

[76] Inventor: **Raymond L. R. Lucas,** c/o Off. Tech., 133 Bis rue Mouneyra, Bordeaux, (Gironde), France

[22] Filed: **Oct. 13, 1971**

[21] Appl. No.: **188,980**

[52] **U.S. Cl.** **242/58.6**
[51] **Int. Cl.** **B65h 19/30**
[58] **Field of Search** 242/58.6, 58.2, 79

[56] **References Cited**

UNITED STATES PATENTS

3,424,394	1/1969	Moore	242/58.6
2,499,562	3/1950	Behrens	242/58.6
2,561,146	7/1951	Sieg	242/58.6
2,405,637	8/1946	Behrens	242/58.6

Primary Examiner—Stanley N. Gilreath
Assistant Examiner—Edward J. McCarthy
Attorney—Arthur B. Colvin

[57] **ABSTRACT**

The invention relates to an apparatus for handling large rolls of paper or other strip or continuous sheet material and comprises a frame having two pairs of arms mounted thereon, the arms of each pair being independently movable toward and away from each other on an associated support beam to accommodate a roll of paper therebetween, and with each of said beams being pivotally mounted so as to be able to cause the pairs of arms carried thereby to be moved to position to engage a roll mounted on the floor and to lift the roll to operating position and to lower an empty roll to the floor.

5 Claims, 10 Drawing Figures

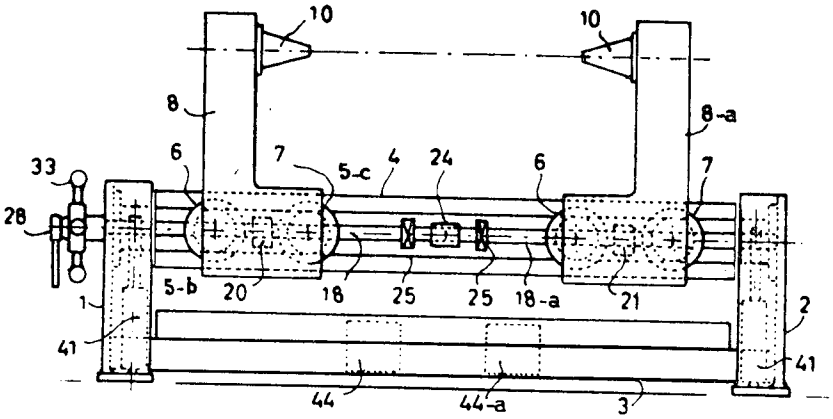

Fig. 1

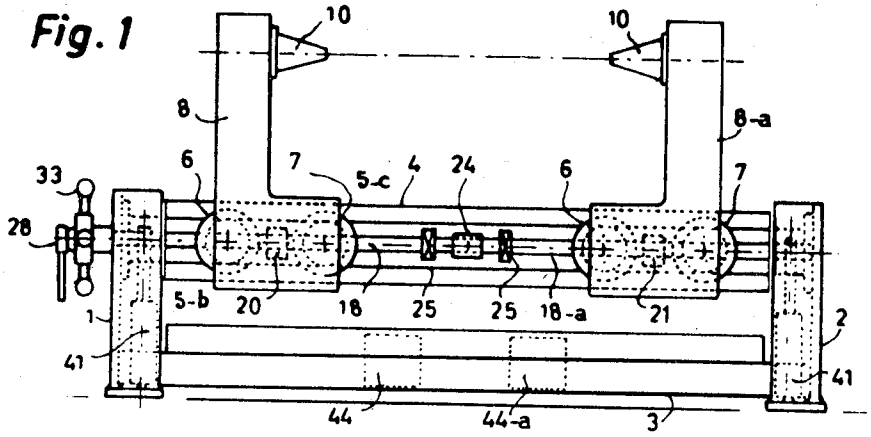

Fig. 2

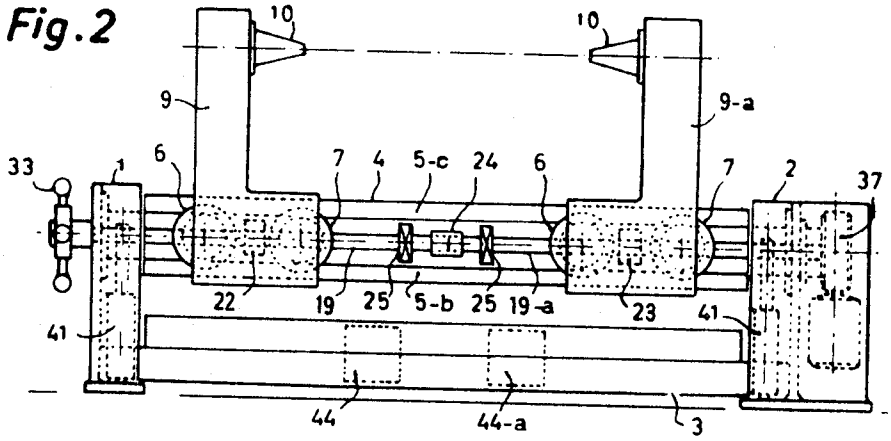

Fig. 3

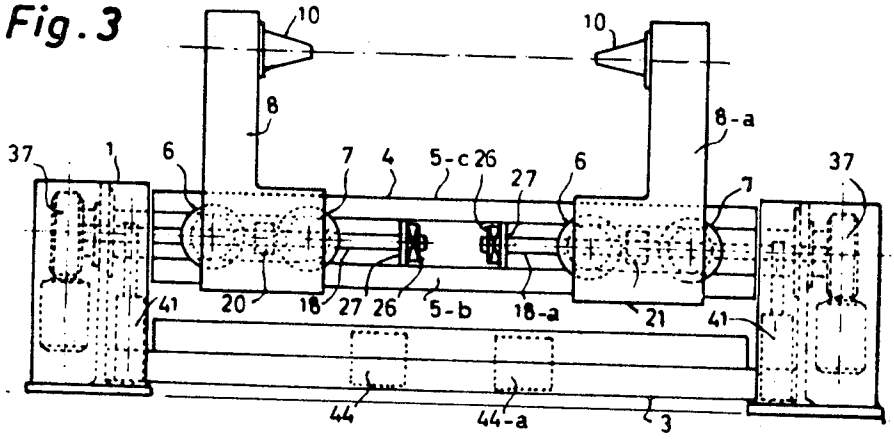

Fig. 4

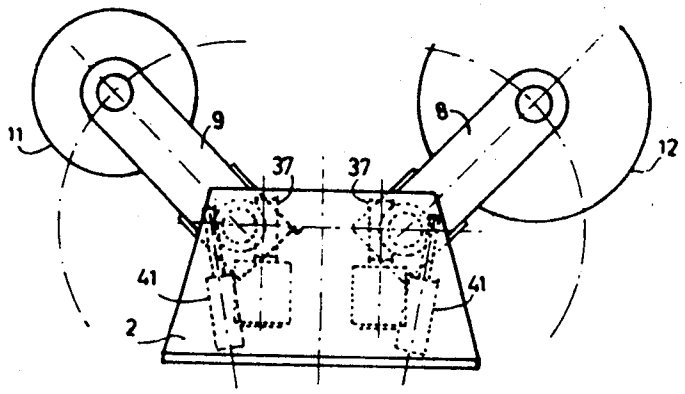

Fig. 5

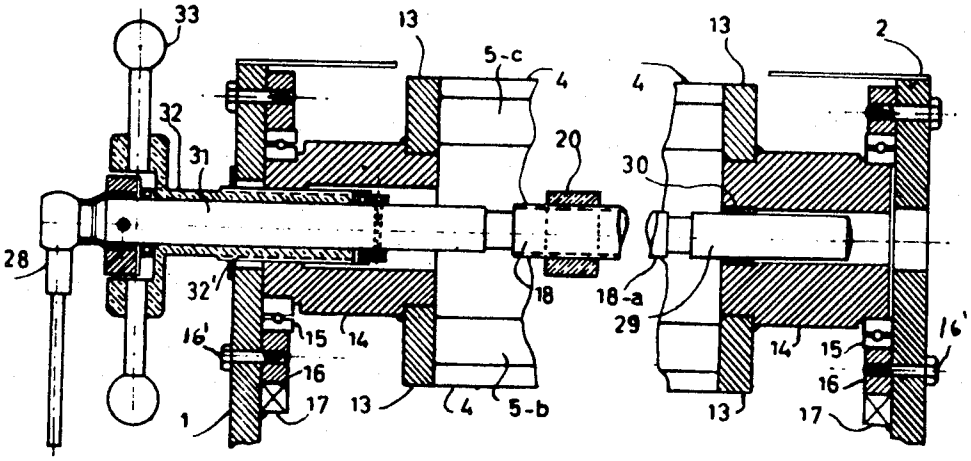

Fig. 6

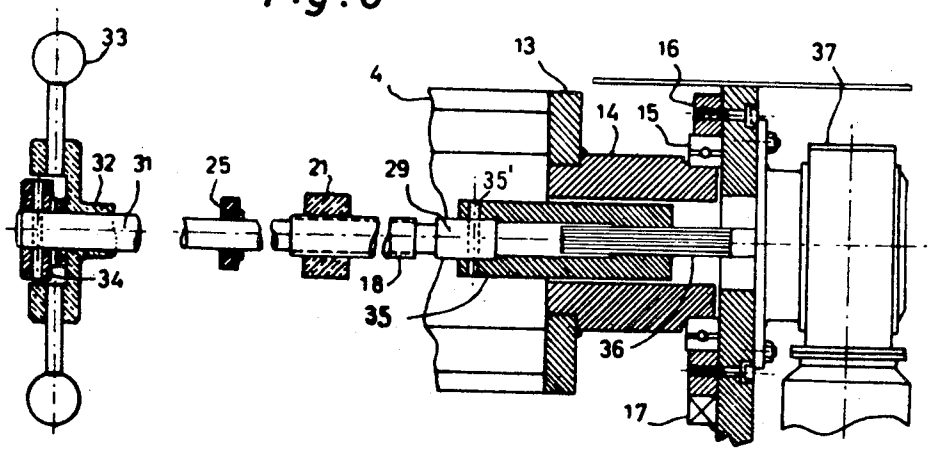

Fig.7

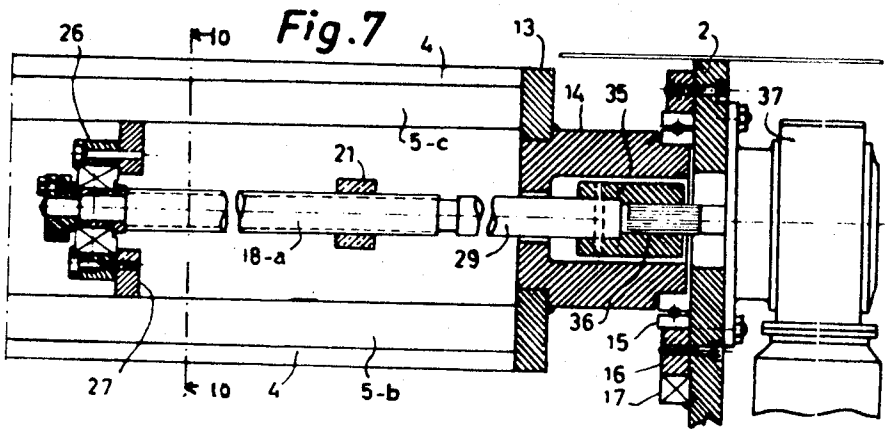

Fig.9

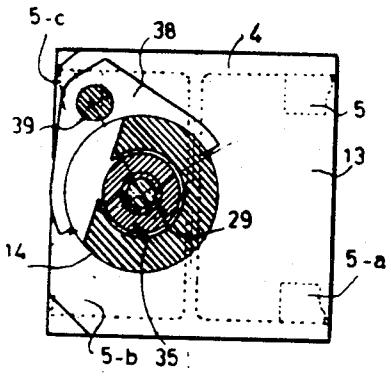

Fig.8

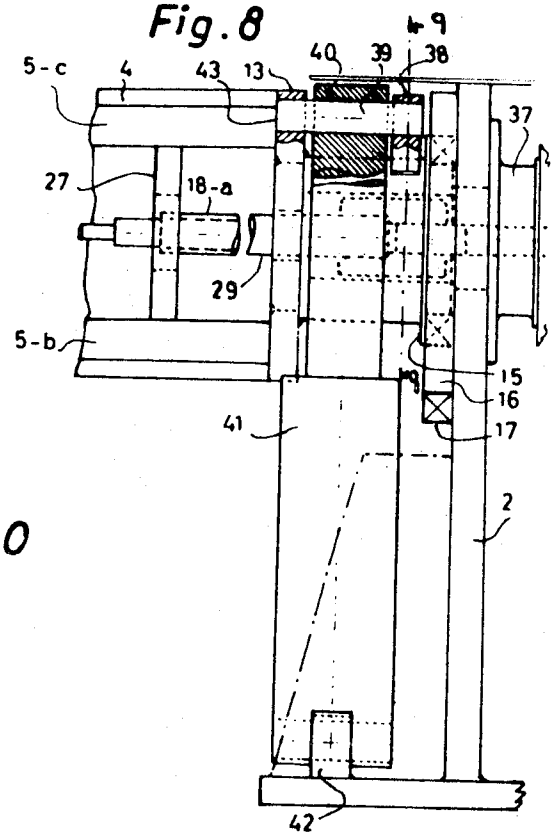

Fig.10

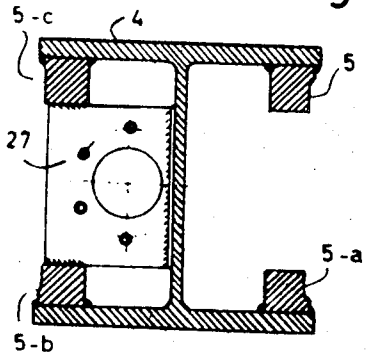

APPARATUS FOR HANDLING ROLLS OF STRIP MATERIAL FOR UNROLLING THEREOF

As conducive to an understanding of the invention, it is noted that in the handling of heavy rolls of continuous sheet or strip material, the unrolling machine is generally provided with two pairs of gripping arms, one pair supporting the roll of material as it is being unrolled by a printing machine, for example, and the other pair first disposing of the previously emptied roll and then picking up a new roll and moving it to the position in which it can supply additional sheet material when the roll that is being unwound is empty.

Where the apparatus that performs the above described functions is subject to vibration, stresses and complicated elements, it readily becomes deranged. Moreover, where the design is complicated, it is difficult to assemble and to disassemble for maintenance.

It is accordingly among the objects of the invention to provide an apparatus for handling large and heavy rolls of paper or other strip or continuous sheet material which has but few parts that may readily be assembled and disassembled for maintenance, that is not likely to become deranged even with long, continuous use, and which will permit ready adjustment to grip a roll of any desired length and will readily lift such roll from the floor to the operating position and which while one roll is being emptied will permit lowering of a second, emptied roll so that a new roll can be engaged and raised to operating position when the first roll is emptied.

According to the invention, the apparatus has two pair of support arms each mounted on a longitudinal axis with said axis lying in the same horizontal plane, parallel to and spaced from each other. The support arms of each pair are movable toward and away from each other by means of an associated pair of control screws of reverse pitch, said screws being positioned in the channel beam on which the associated pair of arms is movably mounted. The control screws may be rotated manually or automatically by a suitable motor.

Each of the channel beams is itself pivotally mounted and may be rotated for adjustment, manually by an associated hand wheel or automatically by a suitable motor. In addition, to effect the desired swinging action of the pairs of support arms each of the channel beams is operatively connected to the piston rod of a double acting hydraulic actuator fitted within the frame of the apparatus.

In the accompanying drawings in which are shown several embodiments of the various features of the invention;

FIG. 1 is a front elevational view of an apparatus according to one embodiment of the invention using a ratchet arm and a handwheel to control respectively the spacing between the support arms and the position of the roll relative to the machine to be supplied;

FIG. 2 is a view similar to FIG. 1 of another embodiment of the invention using a handwheel for adjusting the position of the roll relative to the machine to be supplied and a motorized drive for controlling the spacing between the support arms;

FIG. 3 is a view similar to FIGS. 1 and 2 of still another embodiment of the invention, using a motorized drive for controlling the spacing between the support arms and a second motorized drive for adjusting the position of the roll relative to the machine to be supplied;

FIG. 4 is a side elevational view of the embodiment of FIG. 3;

FIG. 5 is a detail longitudinal sectional view with parts broken away of the embodiment of FIG. 1;

FIG. 6 is a view similar to FIG. 5 of the embodiment of FIG. 2;

FIG. 7 is a detail longitudinal sectional view of the right side of the embodiment of FIG. 3;

FIG. 8 is a longitudinal sectional view of the right end of the embodiment of FIG. 3 showing the hydraulic actuator;

FIG. 9 is a transverse sectional view taken along line 9—9 of FIG. 8, and

FIG. 10 is a transverse sectional view taken along line 10—10 of FIG. 7.

Referring now to the drawings, the end frames **1, 2** of the unrolling machine are braced by a set of intermediate struts **3**. A channel beam **4** extending between end frames **1, 2**, mounts the tracks or rails **5, 5–*a*, 5–*b*, 5–*c*** (FIG. **10**) on which ride the paired rollers **6, 7** which support the pairs of mounting arms **8, 8–*a*** and **9, 9–*a***. Each of the arms **8, 8–*a*, 9,9–*a*** is provided with a conical gripping nose **10** for the rolls of paper **12, 11** (FIG. **4**) to be supported.

As shown in FIG. **5**, for example, plates **13** are rigidly secured to the ends of the beam **4**. Each of the end plates **13** has a central opening in which is rigidly secured one end of a sleeve or journal **14**, the other end of which is rotatably mounted in a ball bearing race **15**,the mount **16** of which rests on support bars **17** secured to the frames **1, 2**, the mount **16** being releasably secured to the frames **1, 2** by screws **16'**.

Secured to the lower ends of each of the pairs of arms **8, 8–*a*** and **9, 9–*a*** are nuts **20, 21** (FIG. **2**), **22, 23** (not shown). Associated with said nuts are control screws **18, 18–*a*** and **19, 19–*a***, the screws of each pair of screws being of reverse pitch.

As shown in FIGS. **1, 5** and **2, 6**, which represent two types of equipment, the control screws **18, 18–*a*** and **19, 19–*a*** are threaded at their outer ends through the nuts **20, 21** and **22, 23** respectively. The inner ends of each pair of screws are connect-ed by a junction **24** and the screws are supported near their inner ends by bearings **25**.

As shown in FIGS. **3, 4, 7, 8**, which represents a third type of equipment, the inner ends of the control screws **18, 18–*a*** and **19, 19–*a*** are not connected, but each is supported by a thrust roller bearing **26** mounted on a bracket **27** secured to beam **4**.

In the first embodiment shown in FIGS. **1** and **5**, the control screw **18** at the left side thereof has associated therewith a ratchet arm **28** which is operatively connected to screw **18**.

The right hand end of screw **18–*a*** has a smooth end **29** slidable in a bearing ring **30** mounted in the associated journal sleeve **14**.

Referring to FIG. **5**, the smooth portion **31** on the left side of screw **18** is slidably mounted on externally threaded sleeve **32** which is threaded at **32'** in the associated journal sleeve **14**, the outer end of sleeve **32** having a handwheel **33** secured thereto.

Referring to the second embodiment shown in FIGS. **2** and **6**, the ratchet bar **28** of FIGS. **1** and **5** is replaced by a stop thrust ring **34**. On the smooth right hand end of the control screw **18–*a***, one end of a sleeve **35** is pinned as at **35'**, the other end of the sleeve **35** being internally grooved longitudinally to receive the splined

end of the shaft 36 of a motor driven speed reducer 37.

Referring to the third embodiment shown in FIGS. 3, 4, 7 and 8, the smooth end 29 at the right side of control screw 18–a is pinned as at 35′ to one end of a sleeve 35, the other end of sleeve 35 being internally grooved longitudinally to receive the splined end of the shaft 36 of a motor driven speed reducer 37.

As shown in FIGS. 8, 9 the side plate 13 mounts a pin 39 as at 43, which pivotally supports a crank arm 38. The pin 39 is secured to the end of the piston rod 40 of hydraulic jack 41 pivoted as at 42 to the frame ends 1 and 2, units 44, 44–*a* being provided for controlling the jacks 41.

In the embodiments shown, the reverse pitch control screws are rotated to adjust the distance between the support arms 8, 8–*a* and 9, 9–*a* and hence the noses 10 so as to become secured to and release the paper rolls, by means of the ratchet 28 for the embodiment of FIGS. 1, 5; a single motorized speed reducer 37 for the embodiment of FIGS. 2 and 6 and two motorized speed reducers 37 at each of the end frames 1, 2 for the embodiment of FIGS. 3, 4, 7, 8 and 9.

In addition, it is to be noted that paper rolls can be put into proper position for unrolling and for providing the equipment to be supplied, with a continuous sheet of material, by means of the handwheel 33 in the first and second embodiments and by changing the direction of rotation of the motorized speed reducer 37 in the third embodiment.

In all the embodiments, the arms 8, 8–*a*, 9, 9–*a* are swung by means of the eccentric crank pin 39 secured to the end plates 13 of the beams 4 by means of the hydraulic jack 41 and associated hydraulic system.

An important feature of the invention, particularly in the third embodiment, lies in the ease of assembling and disassembling the apparatus. Thus, it is sufficient to remove the speed reducers 37, then the bolts or screws 16′ securing the mounts 16 for the ball bearings 15. Thereupon, the entire movable parts of the apparatus rest on the bars 17 so that the mechanism can be fitted or removed by sliding the same on bars 17. Naturally, the supports 42 for the jacks 41 must be previously removed.

The apparatus above described is supplied with safety devices preventing erroneous control actions or loosening of the paper rolls during unrolling.

In addition, pneumatic brakes, for example, are fitted into the support arms to maintain a constant tension on the continuous sheet of material. These brakes are regulated by a peripheral contact arm engaging the roll, and safety devices are provided according to known practice.

Having thus described my invention, what I claim as new and desire to secure by Letters Patent of the United States is:

1. Apparatus for handling rolls of strip material comprising a frame, at least one support beam mounted on said frame for pivotal movement about a horizontal pivot axis coincident with the axis of said beam, track means formed on said beam, a pair of spaced parallel support arms mounted on said beam, said arms having roller means at one end riding on said track means of said beam, roll engaging means at the other end of said arms, said roll engaging means being disposed in opposed, transversely aligned relationship, means for effecting relative movement of said support arms toward and away from each other to adjust the spacing between said roll engaging means, said adjusting means including rotatable control screw means having its axis parallel with and disposed within the confines of said beam, said screw means being journalled for rotation about a horizontal axis, a nut fixed to each said support arm in threaded engagement with said screw means, the threading of said screw means engaging one said nut being of opposite pitch to the thread engaging the other said nut, means for rotating said screw means thereby to shift said support arms toward and away from each other to adjust the spacing between said roll engaging means, and means to effect pivotal movement of said beam and, hence, said arms, thereby to move said roll engaging means between a first horizontal plane and a second horizontal plane.

2. The combination set forth in claim 1 in which the inner ends of said control screw means are rigidly connected and the means to rotate said screw means comprises a ratchet arm operatively connected to the outer end of one of said longitudinally aligned screw means.

3. The combination set forth in claim 1 in which the inner ends of said control screw means are rigidly connected and the means to rotate said screw means comprises motor driven means operatively connected to the outer end of one of said longitudinally aligned screw means.

4. Apparatus in accordance with claim 1 wherein said track means are formed internally of said beam.

5. Apparatus for handling rolls of strip material comprising a frame, a pair of parallel support beams rotatably mounted on said frame about horizontal axes coaxial, respectively, with the axes of said beams, a pair of spaced parallel support arms mounted on each said beam, each arm having a roll engaging means at one end thereof, the roll engaging means of each said pair of arms being disposed in transversely aligned relationship, horizontal adjustment means for effecting relative movement of said support arms toward and away from each other to adjust the spacing between said roll engaging means, said horizontal adjustment means comprising a control screw positioned in each of said beams, the threads to opposite sides of the longitudinal center of said screws being of reverse pitch, a nut fixed to each of said arms, the nuts of the arms of each said pair engaging said oppositely threaded portions of said screws, each said beam including tracks extending longitudinally thereof, each of said arms including roller means at the end remote from said roll engaging means, said roller means of said arms riding on said track means whereby, upon rotation of said screws, said arms will be moved toward and away from each other, and means for effecting pivotal movement of said beams, thereby to move said roll engaging means betwen a first and a second horizontal plane.

* * * * *