Sept. 14, 1937. C. W. SCHANTZ 2,092,781

CASTING DEVICE

Filed Oct. 21, 1935 2 Sheets-Sheet 1

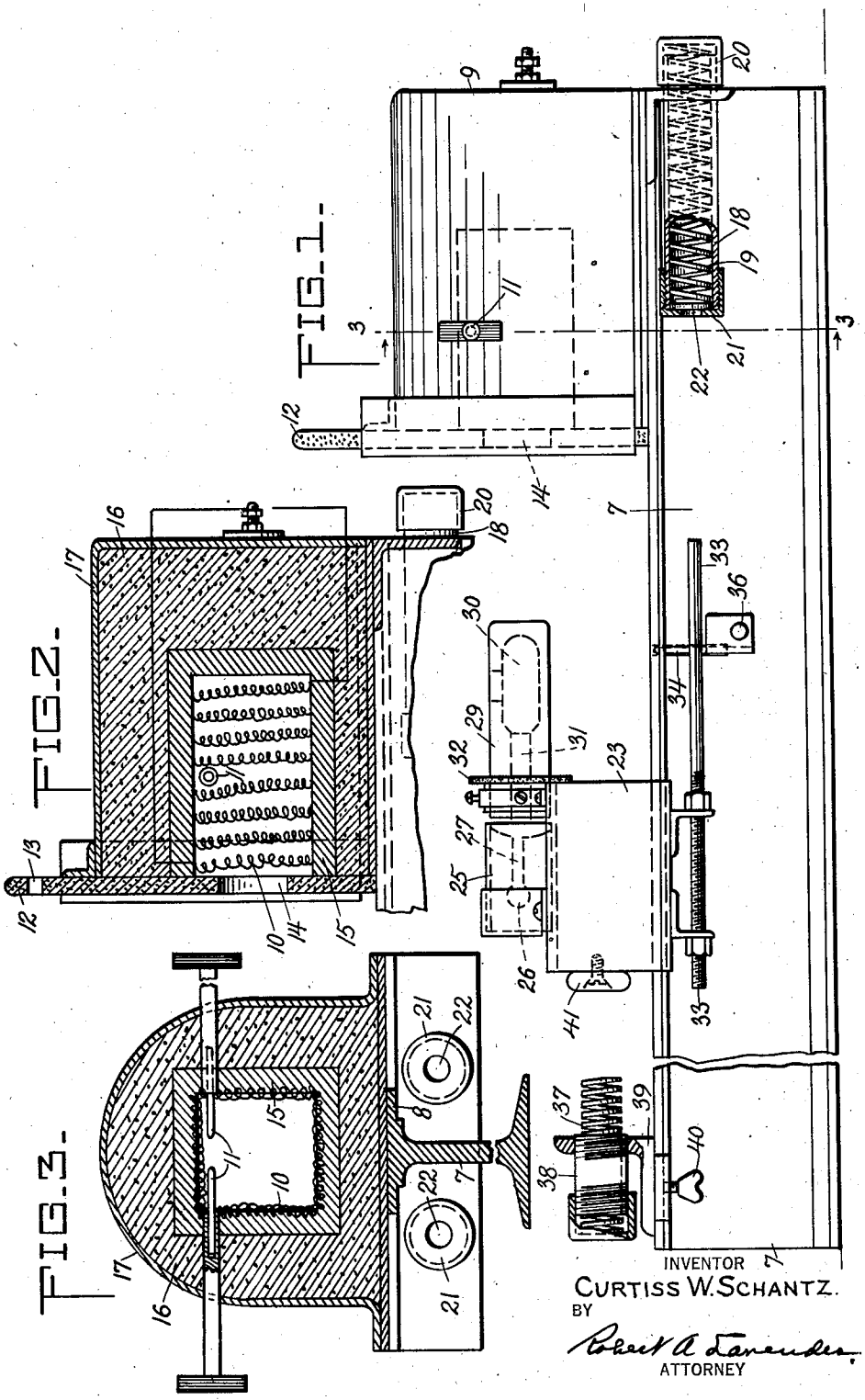

INVENTOR
CURTISS W. SCHANTZ.
BY
Robert A. Lavender
ATTORNEY

Sept. 14, 1937. C. W. SCHANTZ 2,092,781

CASTING DEVICE

Filed Oct. 21, 1935 2 Sheets-Sheet 2

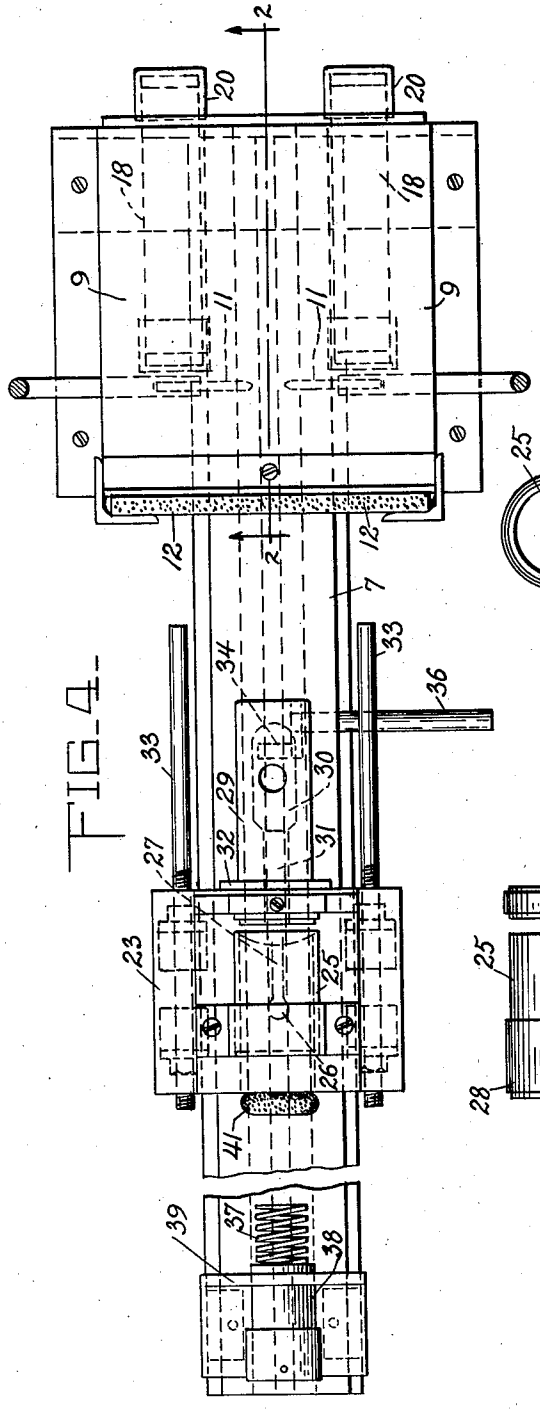

FIG. 4.

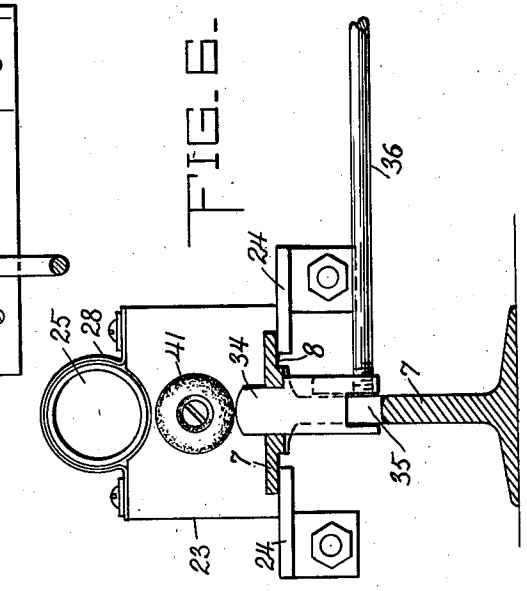

FIG. 6.

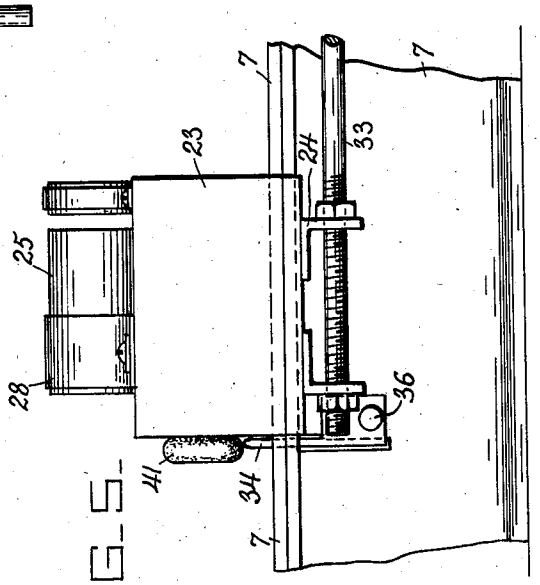

FIG. 5.

INVENTOR
CURTISS W. SCHANTZ
BY
Robert A. Saunders
ATTORNEY

Patented Sept. 14, 1937

2,092,781

UNITED STATES PATENT OFFICE

2,092,781

CASTING DEVICE

Curtiss W. Schantz, United States Navy

Application October 21, 1935, Serial No. 45,859

7 Claims. (Cl. 22—57.1)

(Granted under the act of March 3, 1883, as amended April 30, 1928; 370 O. G. 757)

This invention relates to means and method for casting various articles in a mold and has among its several objects: To provide means for introducing molten material into a mold in such manner that the said material will enter and fill completely all interstices of the mold; to provide a device for so introducing material into a mold that a dense and homogeneous cast will be secured; to provide means for utilizing the inertia of a body of molten material to project the same into a mold. The manner of achieving these and other objects will be apparent from the disclosure which follows:

In the drawings—

Fig. 1 is a side elevation of my novel casting apparatus;

Fig. 2 is a section thereof taken on the line 2—2, Fig. 4;

Fig. 3 is a transverse section thereof taken on the line 3—3, Fig. 1;

Fig. 4 is a top plan view of my apparatus;

Fig. 5 is a side elevation of the carriage with the mold mounted in position thereon; and

Fig. 6 is an end elevation of the carriage as seen from the left in Fig. 5.

While the present invention is of especial advantage in making small castings of valuable alloys, such as gold alloy castings for dental work, its usefulness is by no means limited thereto. Difficulty is frequently experienced in making small castings having very thin portions in that the molten material does not penetrate to the parts of the casting cavity in the mold where the walls of the cavity are closely adjacent. My invention insures that the melt, or material to be cast, is introduced into the mold of the cast with a vigorous motion that forces it to fill completely the casting cavity.

The track 7 is made of a piece of I-beam with the under-surface of each side of the upper flange machined as indicated at 8 to provide a smooth face and to bring the lateral portions of the flange to a uniform thickness. Mounted upon the track 7 at one end is a furnace 9 which is, in the present instance, electrically heated both by resistance coils 10 and an arc between the carbons 11. However, the arc is not used except for the melting of materials having very high fusion temperatures. Electric heating of the furnace is preferred owing to the accuracy with which the temperature may be controlled and such control is very important to prevent loss of the metals used in some of the more costly alloys. The temperature control is effected by means well known in this art and not shown because they constitute no part of the present invention. The mouth of the furnace is closed by a refractory door 12 having in it a hole 13 to be engaged by a suitable tool for sliding the door upwardly and an opening 14 through which the crucible may be introduced into the furnace. The wall 15 surrounding the cavity in the furnace is of suitable refractory material and is surrounded by heat insulation 16 which is protected from mechanical or other damage by a metal shell 17.

Fixed to the underside of the upper flange of track 7, preferably beneath furnace 9, are spring housings 18 having in them springs 19 which are retained by a closure 20 on one end of the housing and an apertured closure 21 on the other end thereof. A disc 22 is disposed between the closure 21 and the adjacent end of the spring 19.

Slidably mounted on the upper flange of track 7 is a carriage 23 to which are secured the angle pieces 24 with one side extending under the upper flange to contact the machined portion 8 and retain the carriage in position on the track. The mold 25, having in it a casting cavity 26 and a gate 27, is secured to the upper surface of the carriage 23 by means of a clamping band 28 or any other suitable means. The crucible 29, having in it a cavity 30 to contain material to be melted and a passage 31 extending laterally therefrom toward mold 25 and in alignment with gate 27, is likewise secured on the carriage 23. The crucible 29 is elongated and is of such cross-sectional area that it will pass through the opening 14 in refractory door 12 into the chamber in furnace 9, the length thereof being such that the cavity 30 is well within the furnace. A refractory disc 32 is mounted on crucible 29 to close the opening 14 when the crucible is in the furnace and so prevent loss of heat. The rods 33 are adjustably mounted in the vertical portions of angle pieces 24 and extend toward spring housings 18 in alignment with the openings in the closures 21, whereby when the crucible 29 is in operative position in the furnace 9 the rods 33 contact the discs 22 and compress springs 19, the carriage being retained in that position against the effort of springs 19 by a latch 34 that is vertically slidable in a slot 35 formed in track 7 by means of a handle 36.

At the end of track 7, remote from furnace 9 there is mounted a buffer spring 37 in a suitable housing 38 carried by bracket 39 that may be adjusted in position by loosening the wing nut 40. A buffer pad 41 is fixed to carriage 23 in position to co-act with buffer spring 37.

The operation of my invention is as follows: When the furnace has been brought to a suitable temperature and the material to be cast has been placed in the cavity 30, the carriage 23 is slid toward the furnace until the disc 32 on the crucible closes the opening 14 and the latch 34 is then slid upwardly to engage the carriage 23 and hold it against the force exerted by the springs 19 which have been compressed by the rods 33. After the time interval necessary for

the fusion of the material in cavity 30 and for bringing it to the desired casting temperature, the handle 36 is grasped and the latch 34 is slid downwardly out of the path of carriage 23, whereupon the energy stored in the springs 19 is released, and acting through rods 33, imparts a vigorous movement to carriage 23 away from the furnace. The movement of carriage 23 is quickly decelerated by contact of the pad 41 with spring 37 and due to the inertia of the molten material in cavity 30 it is thrown through passage 31 and gate 27 into the casting cavity 26 where, by its impact against the walls of the casting cavity, it is projected into all parts of the said cavity. The mold 25 is prepared in any desired manner and may be at any requisite temperature for successful casting. It is obvious that the track 7 may be somewhat inclined downwardly away from furnace 9 or the casting cavity 26 may be disposed lower than the gate 27 to utilize gravitational force to retain the molten material in the casting cavity until solidification has occurred.

This invention may be manufactured and used by or for the Government of the United States of America for governmental purposes without the payment of any royalties thereon or therefor.

What is claimed is:

1. In a device of the class described, a substantially horizontal track, a stationary melting furnace mounted thereon adjacent one end thereof, said furnace having an apertured closure facing the other end of said track, a carriage slidably mounted on said track, a mold on said carriage, a crucible mounted on said carriage, said crucible having a portion adapted to extend through the aperture in said furnace closure into the furnace, there being a cavity in said portion to contain material to be melted and a passage leading from said cavity to the face of the crucible adjacent the mold in alignment with the gate in said mold, two rods secured to the lower side of said carriage at the opposite longitudinal sides thereof, springs mounted under said furnace to be compressed by said rods when said portion is in the furnace, a latch to retain said portion in the furnace against the effort of said springs when compressed, and resilient buffer means on said track to arrest the movement imparted to said carriage by said springs when said latch is withdrawn, whereby the molten metal in said crucible is thrown through said passage and said gate into the mold by the force of momentum.

2. In a device of the class described, a track, a carriage slidable thereon, a mold mounted on said carriage, an elongated crucible mounted on said carriage with one end adjacent to said mold, said crucible having in it adjacent its other end a cavity to contain material to be melted and a passage leading from said cavity to the said one end of the crucible aligned with the gate in said mold, rods fixed to the lower side of said carriage, a stationary furnace adapted to receive the portion of the crucible having in it said cavity to melt the material therein, springs disposed to be compressed by said rods when said portion is in the furnace, a latch to retain said portion in the furnace against the effort of said springs, and a resilient buffer mounted on said track to arrest the movement imparted to said carriage by said springs when said latch is released, whereby the molten material in said crucible is thrown through the said passage into said mold by the force of momentum.

3. In a device of the class described, a track, a carriage slidable thereon, a mold mounted on said carriage, said mold having in it a casting cavity and a laterally extending gate opening thereinto, a crucible mounted on said carriage adjacent said mold, said crucible having a portion to extend into a melting furnace with a cavity therein to contain material to be melted and a passage above the upper surface of the metal in said crucible leading from said cavity to that face of the crucible adjacent the mold and in alignment with said gate, means to impart vigorous movement to said carriage, and resilient buffer means to arrest said carriage to throw molten metal from the cavity in said crucible into the said casting cavity by the force of momentum.

4. In a device of the class described, a track, a carriage slidable thereon, a mold having in it a casting cavity and a container for molten metal mounted on said carriage adjacent each other, there being in said mold a laterally extending gate and in said container a laterally extending passage in alignment with said gate and opening adjacent the opening of said gate, rods secured to said carriage to extend parallel to said track, springs secured to said track to be compressible by said rods, latch means to hold said carriage in position against the effort of said springs when compressed by said rods, and resilient buffer means to arrest the movement imparted to said carriage upon release of said latch means whereby the molten metal in said container is thrown through said passage and said gate into said casting cavity by the force of momentum.

5. In a device of the class described, a stationary furnace, a carriage mounted to slide toward and away from said furnace in alignment therewith, a crucible mounted on said carriage having a portion to extend into said furnace, a mold mounted on said carriage adjacent said crucible, there being in said mold and crucible passages in alignment with and adjacent to each other, the said passage in the crucible being above the upper surface of the metal in said crucible, momentarily acting means to propel said carriage away from said furnace, and means to arrest the movement imparted to said carriage by said propelling means, whereby molten material in said crucible is thrown from said crucible through said passages into said mold by the force of momentum.

6. In a device of the class described, a mold and a container for liquefied normally solid material mounted adjacent each other for linear movement as a unit, there being in said mold and said container passages extending toward each other in alignment with each other, the said passage in the container being above the upper surface of the metal in said container, and means to arrest movement of said unit, whereby liquefied material in said container is thrown from said container through said passages into said mold by the force of momentum.

7. A method of casting metal, which comprises moving, as a unit, a container for molten metal and a juxtaposed mold, said container and mold being provided with adjacent aligned passages, and rapidly decelerating the movement of said unit whereby the metal in said container is moved upwardly and laterally and is thrown from said container through said passages into said mold by the force of momentum.

CURTISS W. SCHANTZ.