Dec. 18, 1928. 1,696,083

A. FRASER

COLLOID MILL

Filed Aug. 7, 1925

Fig. 2.

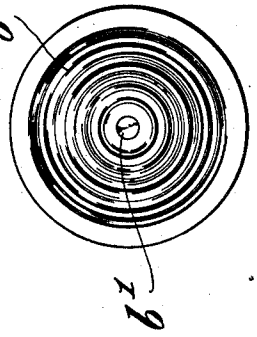

Fig. 1.

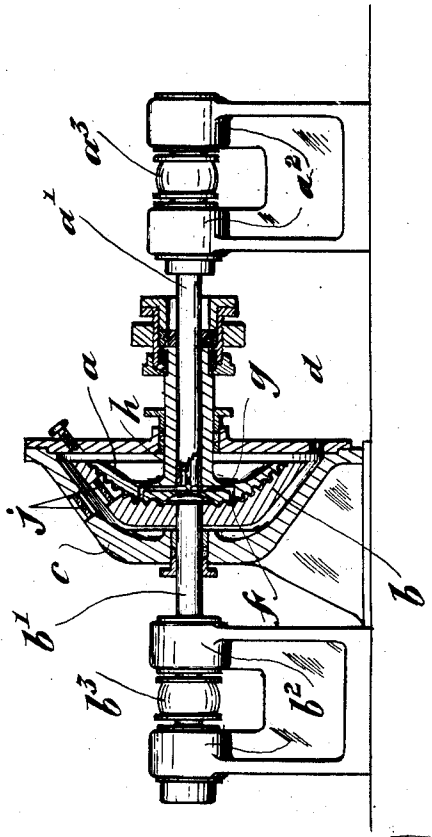

Inventor:-
Andrew Fraser,
by his Attorneys,
Howson & Howson

Patented Dec. 18, 1928. 1,696,083

UNITED STATES PATENT OFFICE.

ANDREW FRASER, OF CROYDEN, ENGLAND.

COLLOID MILL.

Application filed August 7, 1925, Serial No. 48,818, and in Great Britain August 16, 1924.

This invention relates to colloid mills of the type in which two co-operating disc members are mounted face to face and close together for rotation relatively to one another about an axis common to both, and in which the material to be treated is fed into the space between the disc members at or approximately at the centre of rotation and is discharged from said space at a periphery of said members.

This invention contemplates the use of a mill of the above type in circumstances where it may be desired to introduce material of a solid or fluid nature at an intermediate point in the mill, that is to say between the central inlet and the peripheral outlet. For example it may be desired to reduce some constituent or constituents of the material to be treated to a certain degree of fineness before the incorporation of the other constituent or constituents.

According to my invention the improved colloid mill comprises two interfitting disc like members having a passage or duct whereby material can be introduced to the space between said disc members at or near the centre of rotation and an additional passage or passages whereby the material can be introduced to said space at a region intermediate between the termination of the first mentioned passage and periphery of the disc members. By reason of the interfitting disc like members the material is prevented from being thrown outwardly too rapidly under centrifugal action.

In one form of the invention an auxiliary supply conduit enters the mill concentric with the axis of the disc members and at its inner end is constituted by a passage or passages extending through one of the disc members and opening into the space between them at the aforesaid intermediate region.

According to a further feature of the invention the co-operating faces of the disc members may be formed near the centre of rotation (for example between this centre and the inlet end of the auxiliary conduit or conduits) with teeth or the like so that comparatively coarse particles may be ground before reaching that part of the mill at which they are reduced to a size approaching colloidal dimensions.

A still further feature of my invention consists in providing one or both of the disc members with means, for example glazed ports, whereby the material in passing through the mill is subjected to the action of light rays or selected light rays.

On the annexed sheet of drawings I have illustrated one embodiment of my invention whereon:

Figure 1 is a sectional elevation of a colloidal machine.

Figure 2 is a view of one of the rotating members.

The machine consists of two co-related members a and b mounted on shafts a^1 and b^1 journalled in bearings a^2 and b^2 respectively.

Said members are of a somewhat conical formation, the one fitting within the other and both are enclosed in an outer stationary casing or housing c.

Said shafts a^1 and b^1 are provided with pulleys a^3 and b^3 so that by belt gearing they and therefore the members a and b carried thereby can be rotated and in opposite directions to obtain a high relative speed.

The adjacent faces of the members a and b are corrugated concentrically.

Shaft a' is hollow so that the material or mixture to be treated can be fed therethrough to the space between the members.

In operation the said shafts are rotated in opposite directions at a high speed and the material to be treated fed through the hollow shaft a' as aforesaid and then commences to pass outwards between the faces under centrifugal action. This movement is however retarded by the interfitting corrugations of the two members so that the material must partake of a corresponding movement and in doing so impinge repeatedly, and alternately on the corrugations of the one member and then on the corrugations of the other until the resultant colloidal mass, emulsion or dispersion is discharged by centrifugal action into the casing c from which it passes by way of a suitable outlet d.

The member a may be provided with passages f which are in communication with the space between the rotating faces and also with radial passages g which latter are in communication with a supply duct h in the shaft a'.

By such means liquids, solids, or gases can be added to the mixture being treated while the material is passing between the said rotating faces.

The adjacent faces of said members may taper towards each other from the centre of

the machine to the periphery thereof. That is, the material is more closely confined as it passes outwards under centrifugal action so that the particles are subjected to an increasing grinding action.

Thus where the size of the particles to be treated is such that the necessary velocity cannot be imparted thereto by the rotation of said member or members to form the material into a colloid, the particles are first subjected to a grinding action between the members and are thereby reduced in size before being formed into a colloid.

To further assist in this action the two members may be provided with cutting teeth, grinders, or the like, not shown, located near the centre of rotation, the teeth, grinders or the like secured to the one member co-operating with those secured to the other member so as to grind the material between same.

Windows or ports, as indicated at *j*, may be provided in the casing *c* and in one or both of the members *a b* so that the material in passing between said members can be subjected to the influence of light or selected light rays.

In addition to such improved machine being of utility as a colloid mill it may likewise be used for drying and concentrating, the liquid incorporated with the material being partly or wholly vaporized and separated when the material is thrown clear of the mill by centrifugal action.

Likewise the machine may be used for grinding granular material to a very fine powder and also for mixing materials, either solid or solids and liquids and also in the production of emulsions.

What I claim is:—

1. A colloid mill comprising two disc members mounted face to face and close together for rotation relatively to one another about an axis common to both, a part of the opposed faces of said members lying at an angle to the axis of rotation, a conduit terminating in the space between said members near the axis of rotation, a second conduit concentric with the axis of rotation, at least one passage extending from the latter conduit through one of the disc members, and terminating in the space between the disc members between the termination of the first mentioned conduit and the periphery of said members.

2. A colloid mill comprising two co-operating disc members mounted on an axis common to both, a conduit to conduct material to the space between said faces and a conduit to conduct additional material to the said space at a point intermediate between the termination of the first conduit and periphery of said disc members, and means to admit light rays to the material passing through said space.

3. A colloid mill comprising two interfitting disc members mounted face to face and close together for rotation relative to one another about an axis common to both, an axial passage through one member and terminating in the space between the two members, a conduit through said passage, and at least one conduit leading therefrom and terminating in said space between the termination of the said passage and periphery of the discs.

4. A colloid mill comprising two interfitting disc members mounted face to face and close together for rotation relative to one another about an axis common to both, corrugations concentric with the axis of rotation, the projecting portions of the one member projecting into the grooves of the other, an axial passage through one member and terminating in the space between the two members, a conduit through said passage and at least one conduit leading therefrom and terminating in said space between the termination of the said passage and periphery of the discs.

5. A colloid mill comprising two co-operating disc members mounted on an axis common to both, a conduit to conduct material to the space between said faces and a conduit to conduct additional material to the said space at a point intermediate between the termination of the first conduit and periphery of said disc members and a glazed port provided in at least one of said disc members to admit light to the material passing through said space.

ANDREW FRASER.