A. S. KIEFER.

FLUE.

APPLICATION FILED APR. 12, 1915.

1,196,117.

Patented Aug. 29, 1916.

Fig. 1.

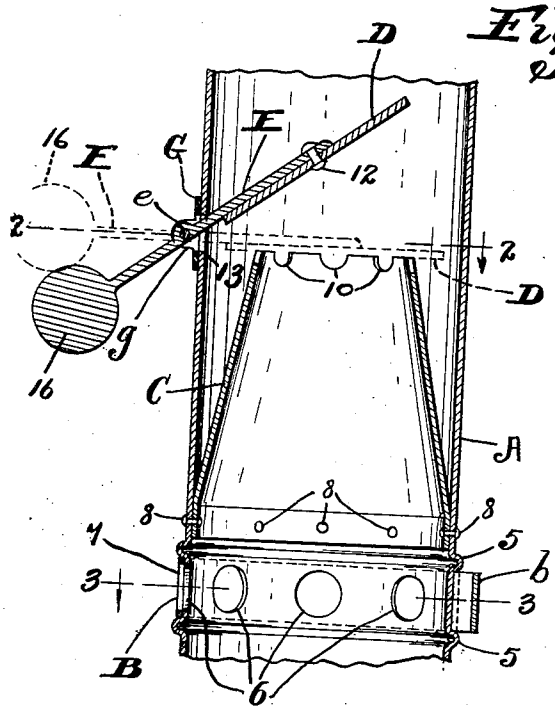

Fig. 3.

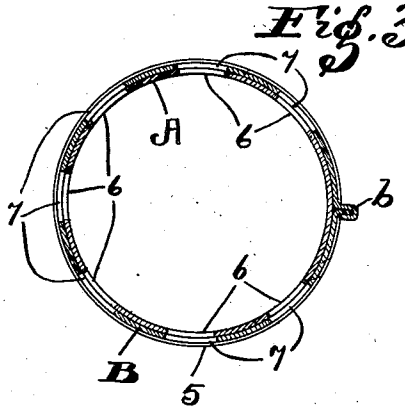

Fig. 2.

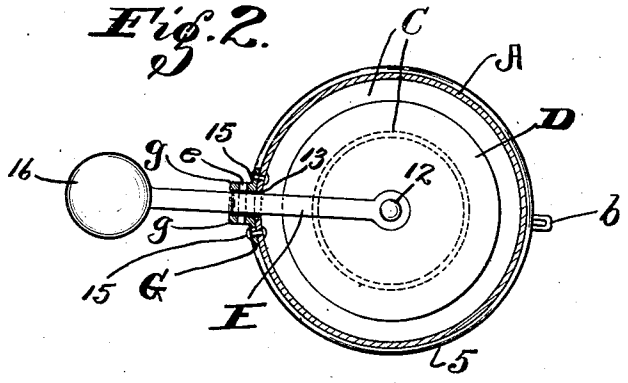

Witnesses:
H. J. Gettins.
B. C. Brown.

Inventor:
Adam S. Kiefer
By Munn & Co
his Attorneys.

UNITED STATES PATENT OFFICE.

ADAM S. KIEFER, OF CLEVELAND, OHIO.

FLUE.

1,196,117. Specification of Letters Patent. Patented Aug. 29, 1916.

Application filed April 12, 1915. Serial No. 20,669.

To all whom it may concern:

Be it known that I, ADAM S. KIEFER, a citizen of the United States of America, residing at Cleveland, in the county of Cuyahago and State of Ohio, have invented certain new and useful Improvements in Flues; and I hereby declare the following to be a full, clear, and exact description of the invention, such as will enable others skilled in the art to which it pertains to make and use the same.

This invention relates to improvements in flues for conducting products of combustion from a stove, furnace or heater.

One object of this invention is to prevent a downward or backward draft through said flue.

Another object is to prevent said backward draft without interrupting the passage of products of combustion through said flue.

Another object is to provide said flue with means whereby fumes may be permitted to pass into the flue from the flue-surrounding space below the point at which any downward draft is checked or obstructed within the flue.

Another object is to provide a flue of the character indicated which is simple and durable in construction.

With these objects in view, and to the end of attaining any other advantages hereinafter appearing, this invention consists in certain features of construction, and combinations and relative arrangement of parts, hereinafter described in this specification, pointed out in the claims, and illustrated in the accompanying drawings.

In said drawings, Figure 1 is a central vertical section of a vertically arranged flue constructed and equipped in accordance with my invention. Fig. 2 is a horizontal section on line 2—2, Fig. 1, looking downwardly, except that in Fig. 2 the movable cover for an upwardly tapering tube with which the flue is internally provided is shown in its closed position, whereas in Fig. 1 said cover is shown in an open position in solid lines and in its closed position in dotted lines. Fig. 3 is a horizontal section on line 3—3, Fig. 1, looking downwardly.

Referring to said drawings, A indicates a vertically arranged sheet-metal flue which is circular in cross-section and provided externally with two vertically spaced annular ribs 5 extending circumferentially of the flue. Between said ribs the flue A is provided with lateral apertures 6 which are spaced circumferentially of the flue. Said flue is encircled between the ribs 5 by a sheet-metal band or ring 7 which is shiftable circumferentially of the flue and provided with a handle-forming laterally and outwardly projecting arm *b*, and said ribs prevent vertical displacement of said ring. The ring B is also provided with lateral apertures 7 spaced circumferentially of the flue A, and the apertures 7 in the ring have such arrangement relative to the apertures 6 in the flue that the apertures 7 in the ring shall, as shown in Fig. 3, register with the apertures 6 in the flue upon properly positioning the ring circumferentially of the flue and thereby establishing communication through the apertures 6 and 7 between the interior and exterior of the flue, but the apertures 6 in the flue and the apertures 7 in the ring are spaced far enough apart to permit shifting of the ring circumferentially of the flue into a position in which the apertures in the flue will be covered by imperforate portions of the ring and thereby interrupt communication through said apertures between the interior and exterior of the flue.

The flue A is provided internally and above the upper rib 5 with an upwardly tapering vertically arranged sheet-metal tube C which is therefore arranged within and longitudinally of said flue above the apertures 6 in the flue and snugly fits said flue internally at the lower end of the tube and has its lower end-portion preferably riveted, as at 8, to said flue. The tube C is provided at its upper extremity with recesses 10 which are spaced circumferentially of the tube.

By the construction hereinbefore described, it will be observed that the ring B constitutes means arranged below the tube C for controlling communication at the apertures 6 in the flue A between the exterior of said flue and said tube.

A cover D is provided for the upper end of the tube C, which cover is arranged wholly above and consequently externally of said tube and consists preferably of a sheet-metal plate which lies horizontally on and consequently abuts against the upper end of the tube in the closed position of the cover, as shown in Fig. 2 and in dotted lines Fig. 1. The cover D is arranged to move upwardly

in opening and is large enough in dimensions to extend laterally of and outwardly from the tube C all around said tube in the closed position of the cover, as shown in Fig. 2 and in dotted lines Fig. 1, but said cover is enough smaller in diameter than the internal diameter of the flue A to avoid interruption in the communication between the recesses 10 and the space over the cover in the closed position of the cover, so that the tube C is in communication with said space in said position of the cover.

Preferably the cover D is riveted, as at 12, to a lever E which overlaps the upper side of and carries said cover and extends from the cover through a lateral slot 13 formed in the sheet-metal body of the flue adjacent the upper extremity of the tube C and between two laterally and outwardly projecting spaced arms or members *g* of a plate or bracket G with which the flue is externally provided adjacent said extremity of said tube. The arms or members *g* of the bracket G are arranged at opposite sides respectively of the slot 13 in the flue A, and the lever E is pivoted horizontally, as at *e*, to the bracket-members *g*. Preferably the bracket G is riveted, as at 15, to the flue A. The lever E is shown provided at a point spaced outwardly from the axis of the lever with a counterbalancing weight 10.

By the construction hereinbefore described it will be observed that the lever E is pivotally connected to the flue A at the exterior of the flue and arranged to swing in a vertical plane, that the bracket G is so contoured and the slot 13 in the flue has such arrangement and dimensions relative to the sweep of the lever that the lever is free to be swung from the one to the other of its extreme positions, and that the weight 16 acts to retain the cover D in any position into which the cover may be swung, and I would here remark that said cover is normally arranged in a slanting and open position, as shown in solid lines Fig. 1.

It will be observed that any downward draft within the flue A will tend to swing the cover from its slanting and open position shown in solid lines, Fig. 1, into its horizontal and closed position shown in Fig. 2 and in dotted lines, Fig. 1, and that said tube forms a stop for limiting the downward swinging or closing movement of said cover.

I would here remark that the tube C, tapering upwardly as shown, will tend to check a downward draft within the flue A, that the cover E when swung against said tube by a downward draft above said cover will positively prevent the establishment of a downward draft through said tube, that fumes may be permitted to pass into the flue at the apertures 6 in the flue from the flue-surrounding space, and that the recesses 10 in the upper end of the tube C prevent interruption of the passage of products of combustion and fumes upwardly through said tube in the horizontal and closed position of the cover.

I would also remark that the cover D is imperforate and extends over and covers the top edge of the tube C in the closed position of the cover and extends over and across the recesses 10 formed at the top edge of said tube, that said recesses form lateral apertures in the upper end of said tube, and that said recesses or apertures are arranged wholly under the cover in the closed position of the cover, so that not only is complete interruption of communication through said tube avoided in said position of the cover, but a downward draft within said tube is positively prevented.

What I claim is:—

1. In an upright flue, an upwardly tapering upright tube arranged within said flue and having its lower end snugly fitting said flue, which tube is provided at its upper end with lateral apertures, a movable cover covering the upper end of said tube in the closed position of the cover and arranged to move upwardly in opening, said cover being larger in dimensions horizontally than the upper end of the tube and enough smaller in dimensions than the internal diameter of the flue to avoid interruption of communication between the aforesaid apertures and the space over the cover in said position of the cover, and the relative arrangement of the parts being such that said apertures are wholly under the cover in the closed position of the cover.

2. In an upright flue, an upwardly tapering upright tube arranged within said flue and having its lower end snugly fitting said flue, which tube is provided at its upper end with lateral apertures, a movable imperforate cover for said tube, which cover lies on the top edge of the tube in the closed position of the cover and is arranged to move upwardly in opening, and the relative arrangement of the parts being such that said apertures are wholly under the cover in the closed position of the cover.

In testimony whereof, I sign the foregoing specification, in the presence of two witnesses.

ADAM S. KIEFER.

Witnesses:
B. C. Brown,
Victor C. Lynch.