(No Model.)

2 Sheets—Sheet 1.

F. R. BROWN.

CAR COUPLING.

No. 472,103.

Patented Apr. 5, 1892.

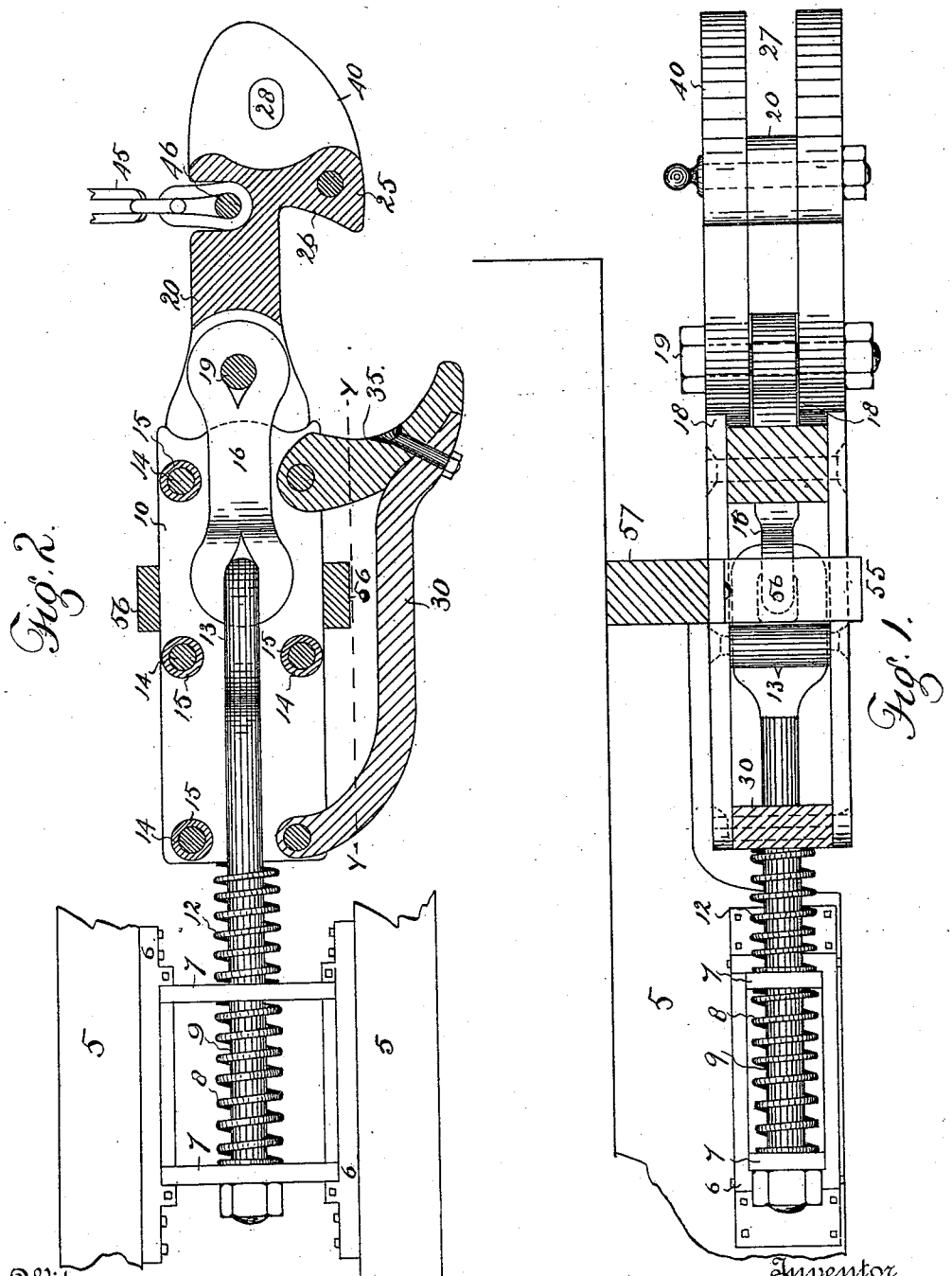

Witnesses

J. J. Rollauger

Wm. McConnell

Inventor

Francis R. Brown

By his Attorney

A. J. O'Brien

(No Model.) 2 Sheets—Sheet 2.

F. R. BROWN.

CAR COUPLING.

No. 472,103. Patented Apr. 5, 1892.

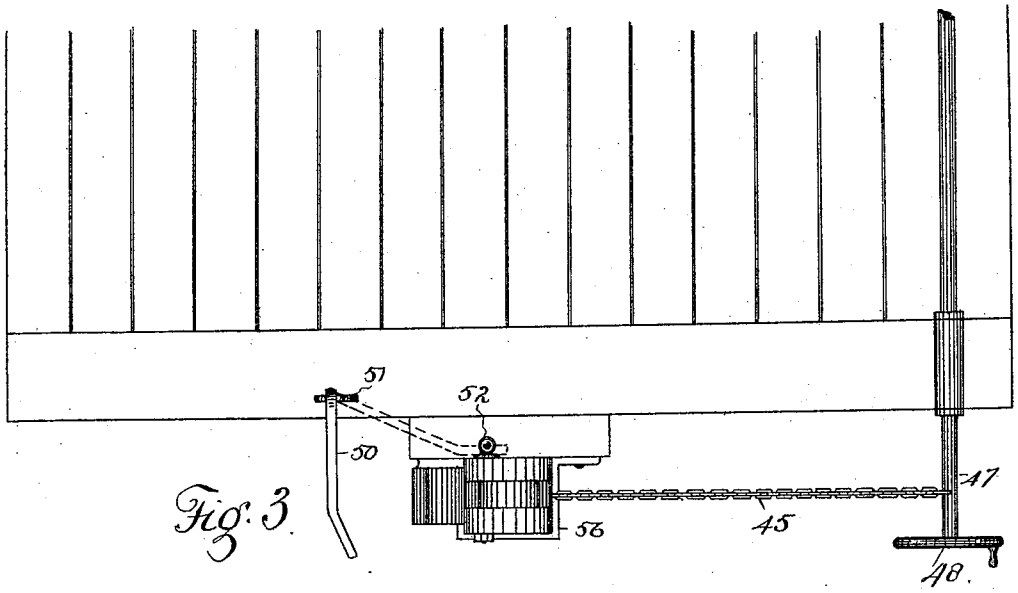

Fig. 3.

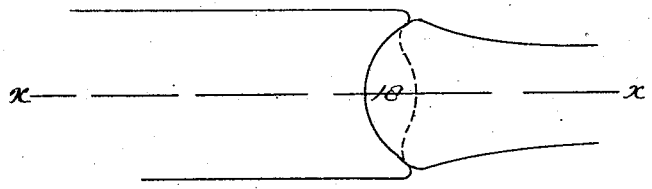

Fig. 4

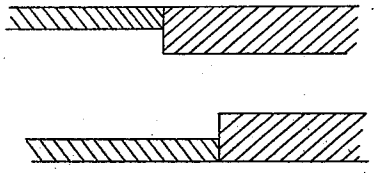

Fig. 5.

Witnesses
J. J. Rollaucet
Wm. McGonnell

Inventor
Francis R. Brown
By his Attorney
A. J. O'Brien

UNITED STATES PATENT OFFICE.

FRANCIS R. BROWN, OF DENVER, COLORADO, ASSIGNOR TO THE GLOBE MANUFACTURING COMPANY, OF SAME PLACE.

CAR-COUPLING.

SPECIFICATION forming part of Letters Patent No. 472,103, dated April 5, 1892.

Application filed July 1, 1891. Serial No. 398,182. (No model.)

To all whom it may concern:

Be it known that I, FRANCIS R. BROWN, a citizen of the United States of America, residing at Denver, in the county of Arapahoe and State of Colorado, have invented certain new and useful Improvements in Automatic Car-Couplers; and I do declare the following to be a full, clear, and exact description of the invention, such as will enable others skilled in the art to which it appertains to make and use the same, reference being had to the accompanying drawings, and to the figures of reference marked thereon, which form a part of this specification.

My invention relates to a novel form and construction of automatic car-coupling for use in connection with all classes of cars, and particularly with those having cheek-plates provided with longitudinal ways, in which are located followers separated by a coil-spring surrounding a draw-bolt having its outer extremity located within the draw-head.

The object of the invention is to provide a device of the class stated which shall be of simple construction, easily manufactured, economical in cost, reliable, durable, and efficient in use. These ends I accomplish by the use of the mechanism shown in the accompanying drawings, wherein is illustrated an embodiment of the invention.

In the drawings, Figure 1 is a side elevation, partially in section, showing the coupler secured to a car. In this view one of the cheek-plates is removed and the section is taken through the buffer on the line *y y*, Fig. 2. Fig. 2 is a horizontal longitudinal section taken through the coupler. Fig. 3 is a front end view of the device secured to a car and having a suitable means for uncoupling. Fig. 4 is a fragmentary view illustrating the overlapping parts forming the joint of the coupler. Fig. 5 is a longitudinal vertical section taken through the center of the same.

In the views similar reference characters designate corresponding parts of the mechanism.

Let the numeral 5 indicate the cheek-plates, provided with the way-plates 6. The followers 7 are located within the ways formed by these plates and separated by a coil-spring 8. The forward follower forms a stop for the spring, while the rear follower compresses it. Through the center of this spring and through apertures formed in both followers passes the draw-bolt 9. Outside of the front follower and between it and the draw-head 10 is located another coil-spring 12, also surrounding bolt 9. This bolt terminates at its forward extremity in an eye 13, located between the two plates forming the draw-head. These plates are secured together by rivet-bolts 14 and separated by sleeves 15, through which the bolts pass. Sleeves 15 form in effect shoulders upon the riveted bolt, said shoulders engaging the plates interiorly. The eye of bolt 9 engages and is interlocked with one extremity of a centrally-closed link 16. The opposite extremity of this link enters a recess formed in the rear extremity of the coupling-head 20. Through this link and suitable apertures formed in the head 20 passes a pivot-bolt 19, which connects bolt 9 with the coupling-head 20 through the medium of link 16.

The draw-head 10 and the coupling-head 20 are united in a sort of double overlapping knee-joint, as shown at 18. The parts comprising joint 18 are held in suitable operative relation by the expansive power of spring 12.

Head 20 is provided with a coupling-hook 25, curved inwardly from the point, as shown at 26, while the outer extremity of the head is recessed at 27 and provided with an aperture 28, whereby a coupling may be formed with a car provided with the ordinary coupling-link or with the coupling-bar of a locomotive. A coupling-pin is then passed through opening 28 and one extremity of the link or bar in recess 27.

To the draw-head 20 is secured the guard-buffer 30, which, as shown, is secured to the head by riveted bolts and curved interiorly at 35 to engage the coupling-head of the opposite car, and thus prevent the same from passing too far backward.

The guard-buffer may be of any suitable construction, and its face 35 may be fashioned to correspond with the engaging extremity of

the coupling-head. The engaging faces of two coupling-heads 25 are curved, as shown at 40, so that as they engage they will yield outwardly until they reach the coupling position, when they are returned by the action of spring 8 to their normal position.

The cars are uncoupled by the use of a chain 45, secured to the coupling-head in any suitable manner, as by passing a rivet 46 through a link in one extremity of the chain. The outer extremity of this chain may be secured to a vertical bar 47, suitably secured to the end of the car and adapted to rotate as hand-wheel 48 is turned. Bar 47 should project both above and below the car, so that it may be turned by a person standing on the ground or on top of the car. Each extremity should be provided with a hand-wheel 48. It will be observed that as bar 47 is rotated and chain 45 is wound thereon the coupling-head acted upon will be drawn outward and disengaged from the similar engaging head. By the use of this uncoupling mechanism it will be seen that the cars may be uncoupled at any time without stopping the same, which is often advantageous and desirable.

Instead of the bar and hand-wheel, a suitable lever mechanism may be employed for disconnecting the coupling-heads.

The draw-head 10 is supported in a stirrup-shaped carrier 55, which extends underneath and up on both sides of the head, the arms 56 terminating in flanged extremities, which are secured to a beam 57, made fast to the car.

When it is desired to connect my improved coupling-head to the link of the ordinary draw-head or with the coupling-bar of locomotives, it is preferable that the head 20 be locked securely in position, so as to prevent any lateral movement. This is accomplished by a locking-bar 50, which hangs in a staple 51, secured to the end of the car. In the free extremity of this bar is formed an opening whereby the end of the bar slips over a spherical shaped head 52 of a suitable bolt 53, made fast in the coupling-head. When the locking-bar is in position, as shown by dotted lines in Fig. 4, it will be observed that head 20 can have no lateral movement in either direction. It is obvious that many forms of this mechanism may be used without departing from the spirit of the invention. For instance, the spring 12 may be dispensed with, inasmuch as the spring 8 will perform the functions of both, only in a lessened degree.

The link 16 may be dispensed with by extending the eye of the draw-bolt and passing the pivot-bolt of the coupling-head therethrough, while the guard and buffer may be omitted when the car is already provided with independent buffer and spring.

Having thus described my invention, what I claim is—

1. The combination, with a draw-head secured to the car and provided with a longitudinal opening therethrough, of a hooked coupling-head engaging the outer extremity of the draw-head and laterally movable exteriorly thereon, and a longitudinally-yielding connection between the car and the coupling-head, said connecting means passing through the longitudinal opening in the draw-head and attached to the coupling-head outside of the draw-head, substantially as described.

2. In a car-coupling, the combination of the hooked coupling-head, the draw-head provided with a longitudinal opening therethrough from end to end and intermediately located between the coupling-head and the car, a longitudinally-yielding connection attached to the car at one extremity, passing through the longitudinal opening in the draw-head, and attached to the coupling-head at the opposite extremity, said connection with the coupling-head being formed outside of the draw-head, whereby the coupling-head has a lateral movement thereon, and a guard-buffer secured to the draw-head and located in the rear of the coupling-head when the cars are coupled, substantially as described.

3. In a car-coupling, the combination of the yielding draw-bolt connected with the car, the hooked coupling-head connected with the bolt by a link 16, and the draw-head lying intermediately between the coupling-head and the car and through which the connection between the car and the coupling-head passes, substantially as described.

4. In a car-coupler, the combination, with the movable followers separated by the spring, of the draw-bolt passing through the followers and the spring, the draw-head, the coupling-head, and the link, which is movably connected at one extremity with the draw-bolt and at the other extremity with the coupling-head, and a spring located between the front follower and the draw-head, whereby the latter is held in suitable functional relation with the coupling-head, substantially as described.

5. In a car-coupling, the combination of the yielding draw-bolt, the hooked coupling-head, and the link connecting the bolt and head, the draw-head suitably held in operative relation with the coupling-head, and suitable means for uncoupling the hooked heads by a lateral thrust, substantially as described.

6. In a car-coupling, the combination of the hooked coupling-head normally yieldingly connected with the car in such a manner as to permit both longitudinal and lateral movement, and a locking-bar connected with the car at one extremity and adapted to engage the coupling-head at the opposite extremity, whereby the coupling-head is rigidly secured in place at will, said head being recessed both longitudinally and vertically for engagement with the ordinary link or locomotive coupling-bar, substantially as described.

7. In a car-coupling, the combination of the draw-head provided with a longitudinal opening therethrough from end to end and

suitably supported upon the car so as to have no lateral movement, a hooked coupling-head engaging the outer extremity of the draw-head, and a longitudinally-yielding connection between the car and the coupling-head, said connecting means passing through the longitudinal opening in the draw-head and attached to the coupling-head outside of the draw-head, whereby the coupling-head has a lateral movement thereon, substantially as described.

In testimony whereof I affix my signature in presence of two witnesses.

FRANCIS R. BROWN.

Witnesses:
WM. MCCONNELL,
G. J. ROLLANDET.