US 20080011487A1

(19) United States

(12) Patent Application Publication

Bertane et al.

(10) Pub. No.: US 2008/0011487 A1

(43) Pub. Date: Jan. 17, 2008

(54) DRIVE PISTON AND FOOT VALVE SEAT

(75) Inventors: **Mark Bertane**, Glen Ellyn, IL (US); **Steve Massie**, West Chicago, IL (US)

Correspondence Address:
MARSHALL, GERSTEIN & BORUN LLP
233 S. WACKER DRIVE, SUITE 6300, SEARS TOWER
CHICAGO, IL 60606

(73) Assignee: **BLACKHAWK ENVIRONMENTAL CO.**, Glen Ellyn, IL (US)

(21) Appl. No.: **11/485,868**

(22) Filed: **Jul. 13, 2006**

Publication Classification

(51) **Int. Cl.**
E21B 43/00 (2006.01)

(52) **U.S. Cl.** **166/369**; 166/105

(57) **ABSTRACT**

A drive piston valve and a foot valve may each have a valve seat in the form of a non-compressible (e.g., metal or ceramic) sealing plate having a compressible, resilient mating element that retains the ring at an inlet portion of a check valve having a housing formed of another material, such as a low-wear resin material. In some examples, the sealing plate may have a truncated corner for engaging a check ball in its closed positioned while avoiding damage to the check ball or plate resulting from a chemical encrustation build-up or other containment at the sealing edge.

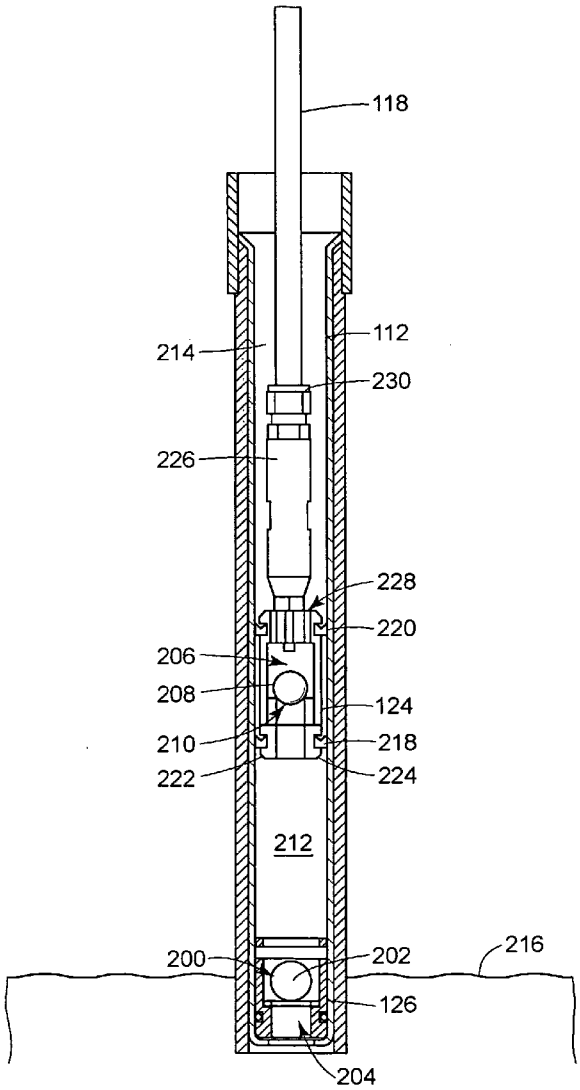

FIG. 1

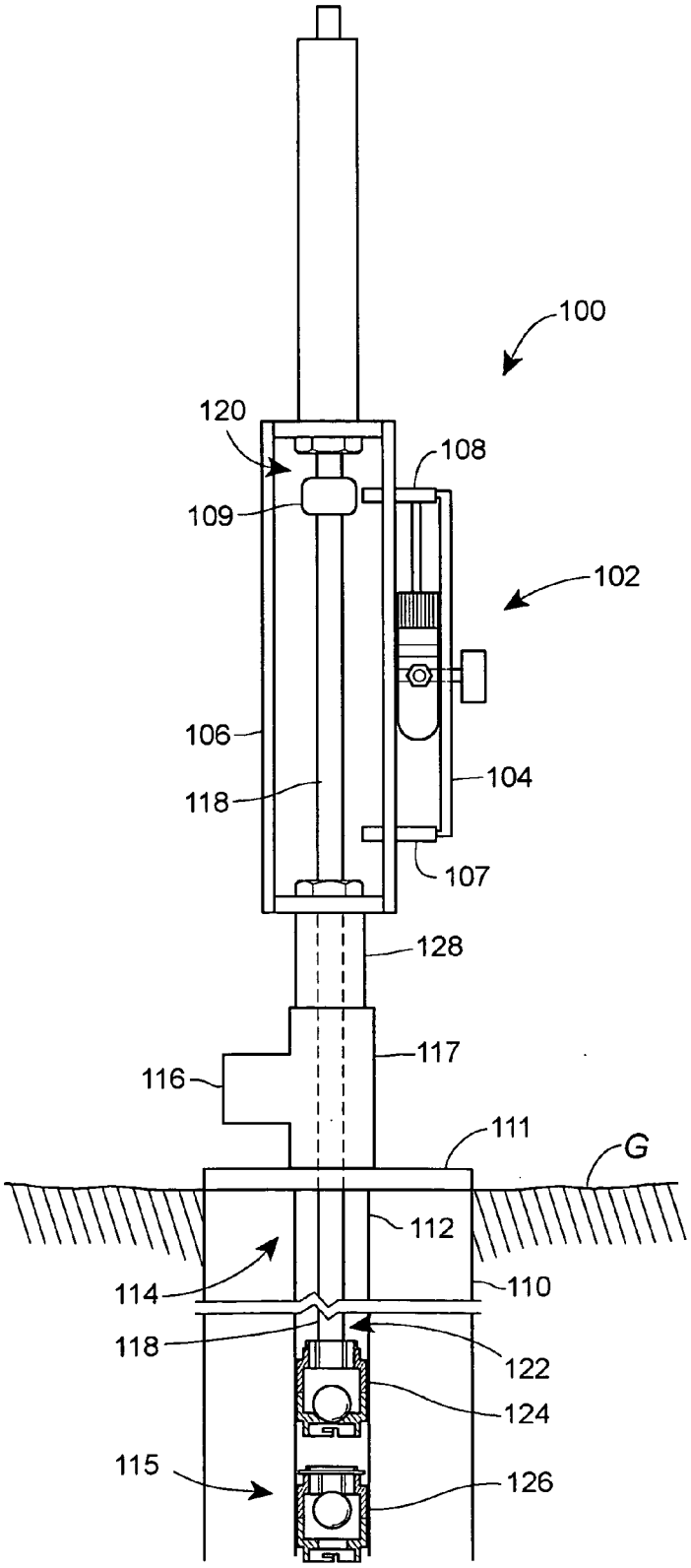
100
120
108
109
102
106
104
118
107
128
117
116
111
G
112
114
110
118
122
124
115
126

FIG. 2A

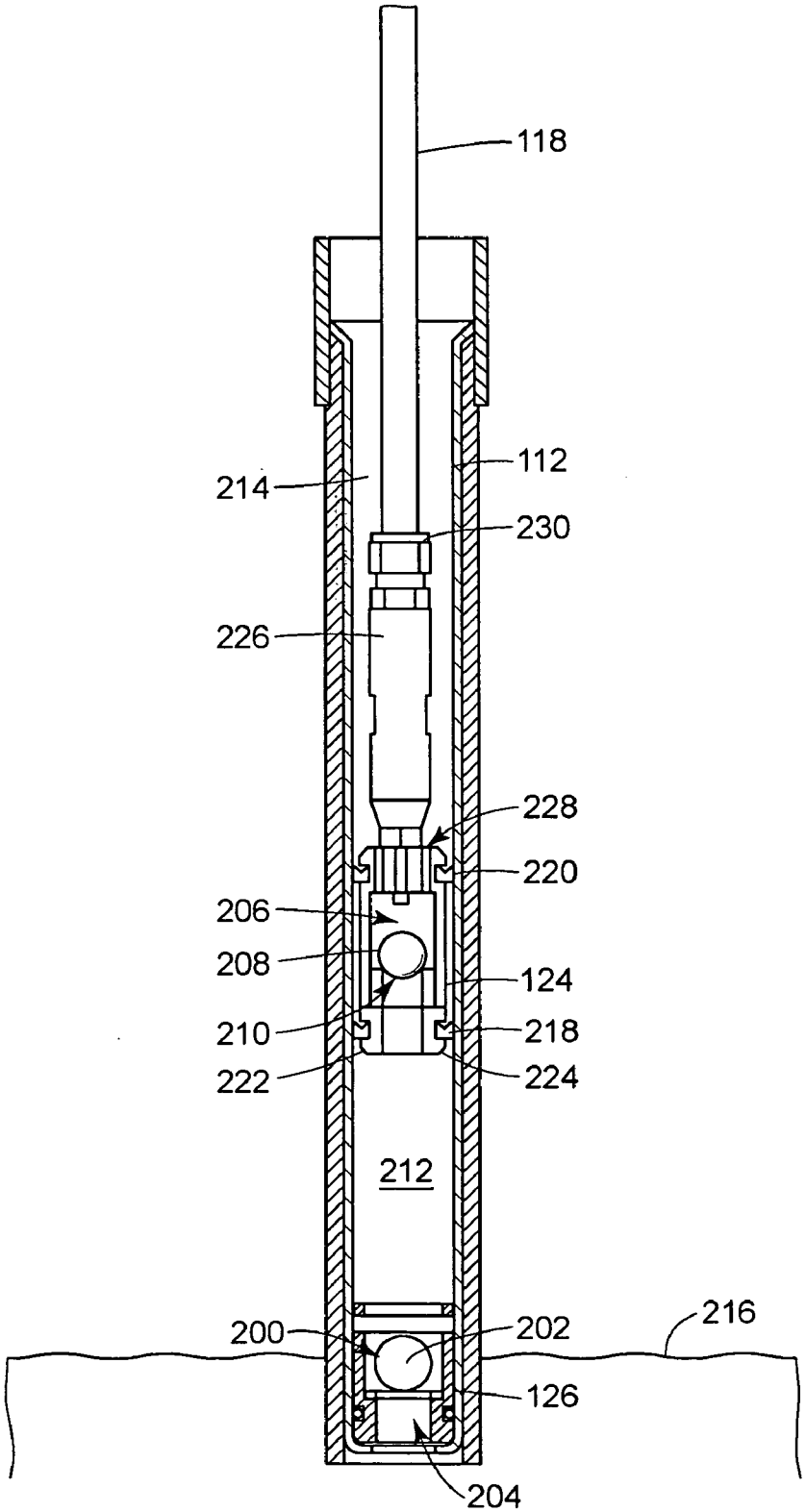
118
112
214
230
226
228
220
206
208
124
210
218
222
224
212
200
202
216
126
204

FIG. 2B

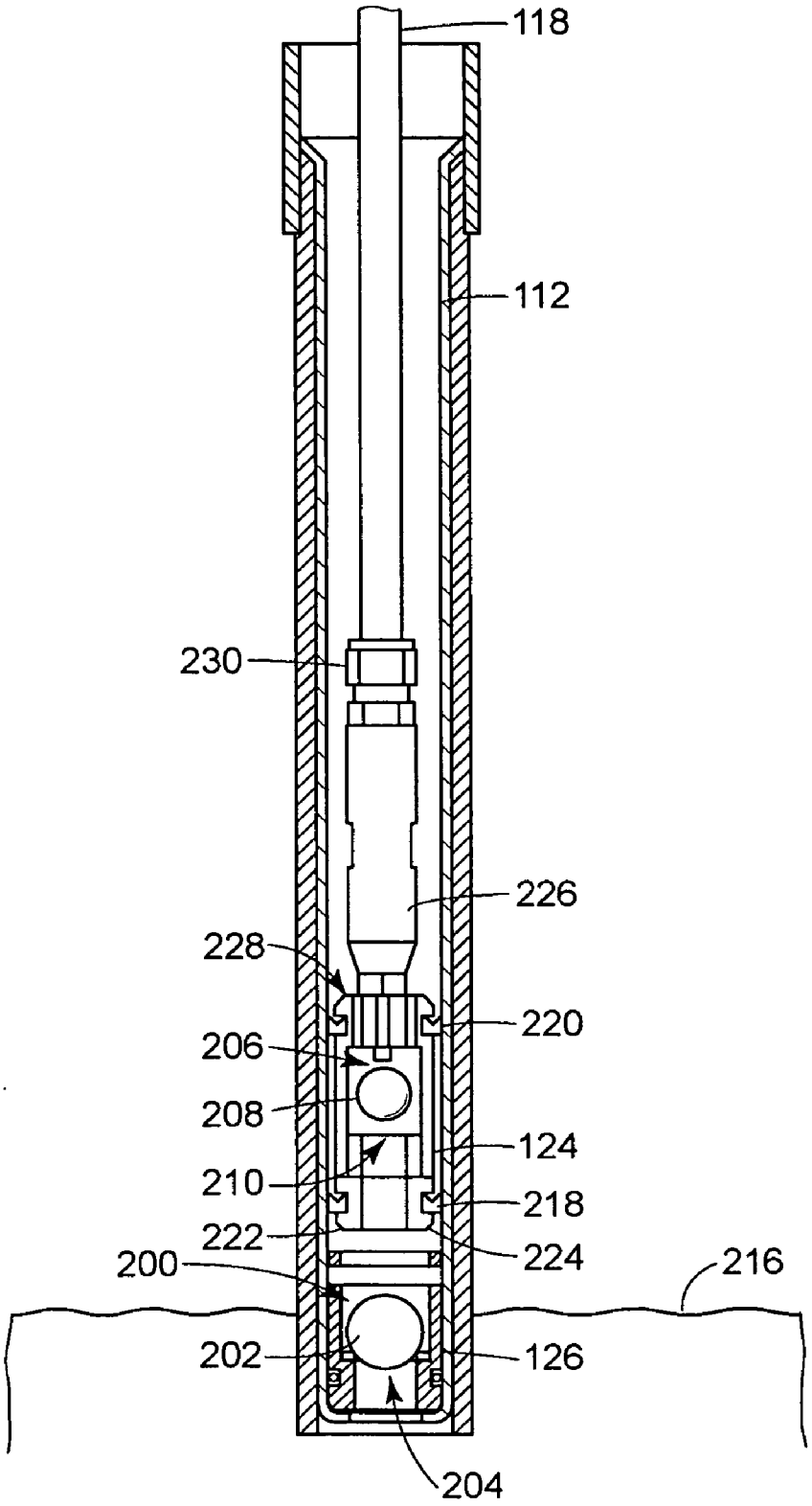
118
112
230
226
228
220
206
208
124
210
218
222
224
200
216
202
126
204

FIG. 3

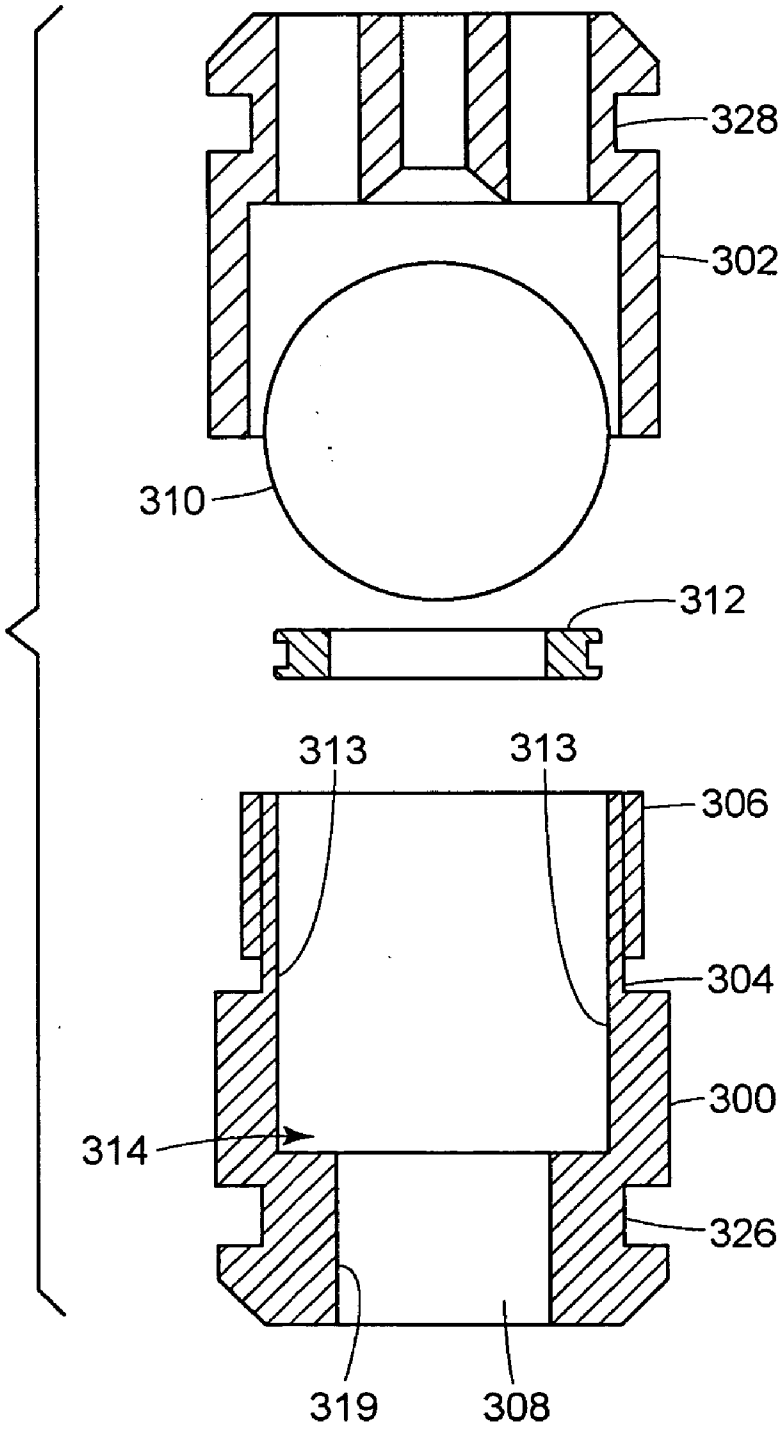

FIG. 4A

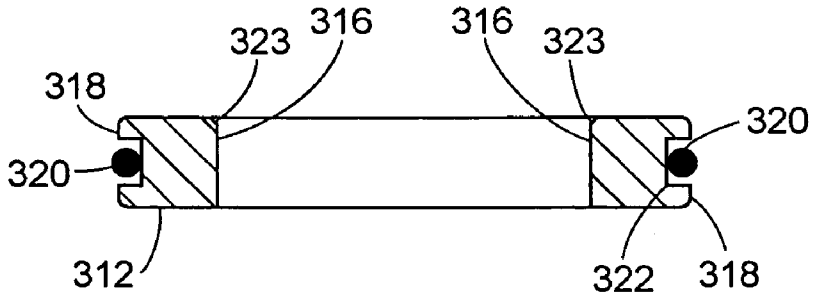

FIG. 4B

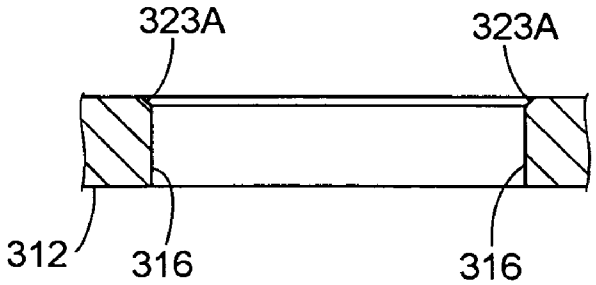

FIG. 4C

FIG. 5

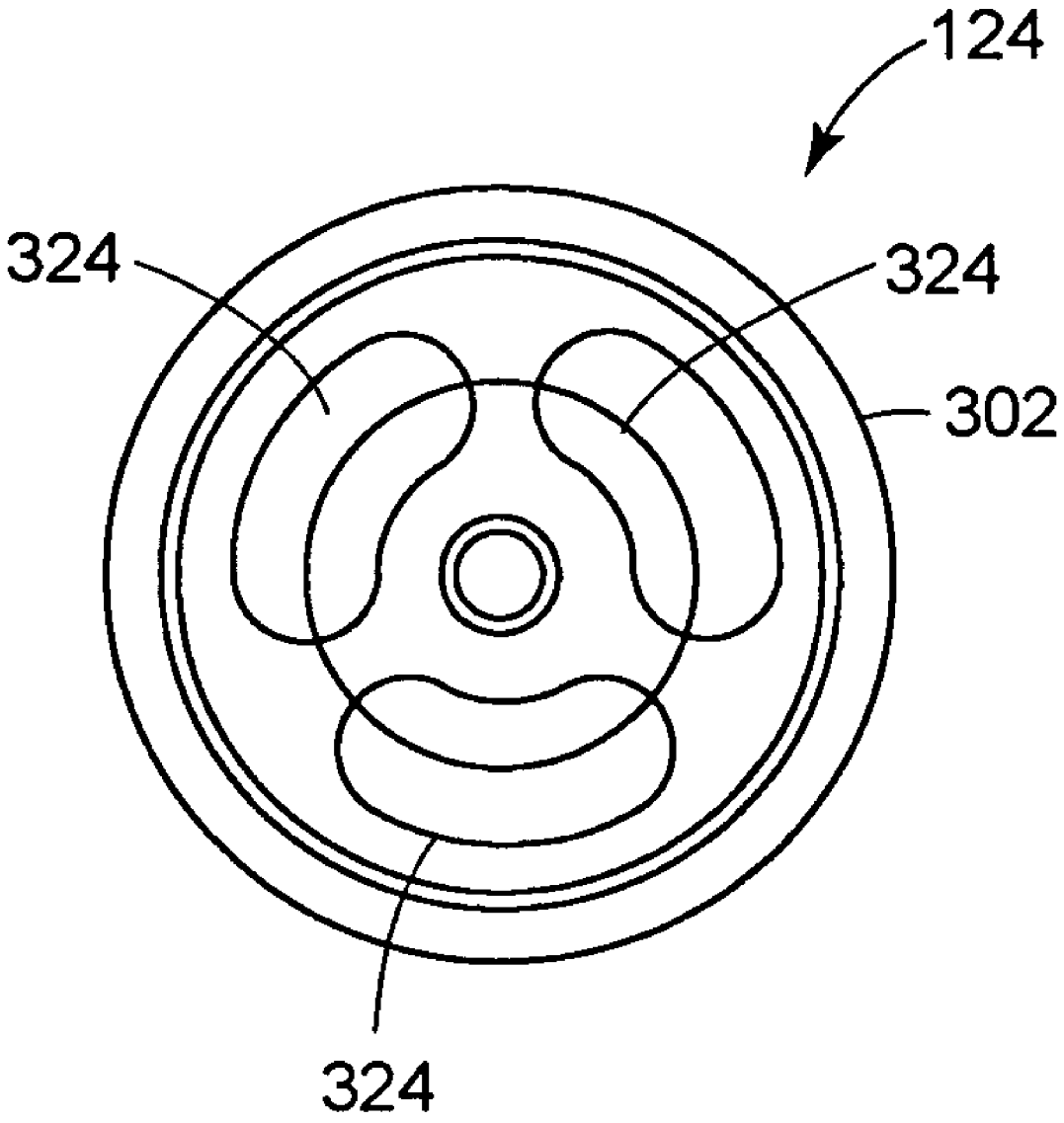

FIG. 6

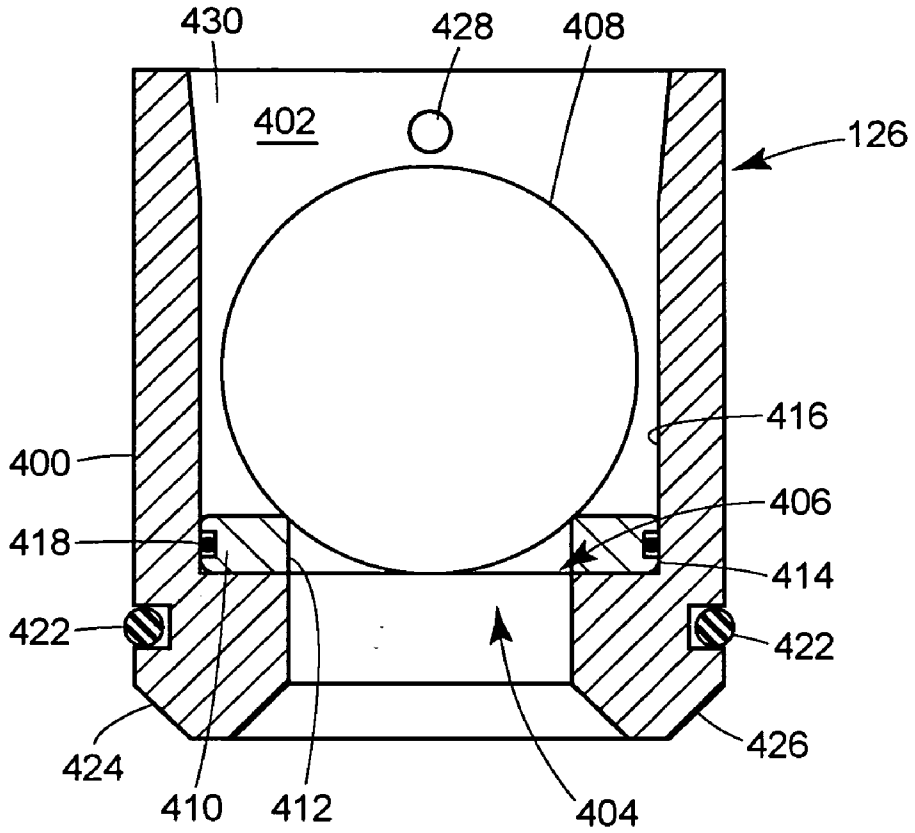
430
428
408
402
126
416
400
406
418
414
422
422
424
426
410
412
404

FIG. 7

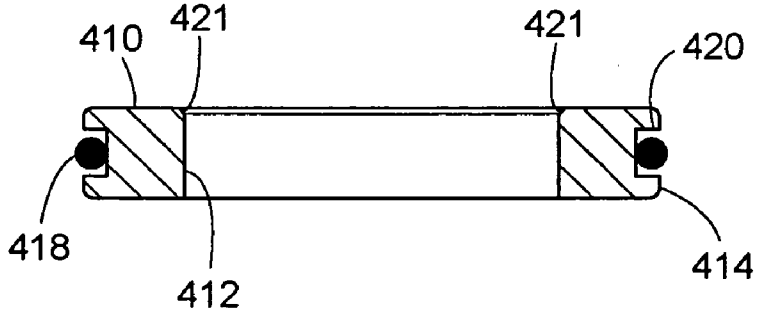
410
421
421
420
418
412
414

DRIVE PISTON AND FOOT VALVE SEAT

FIELD OF THE DISCLOSURE

[0001] The invention relates generally to devices and methods for pumping liquids and more particularly to devices and methods for pumping liquids from a well or a below-surface reservoir using a driving piston rod.

BACKGROUND OF RELATED ART

[0002] There are a variety of techniques for pumping fluids from underground reservoirs. Over a hundred years ago, general windmill and hand pump systems were developed to access well water for drinking and irrigation. Oil well piston pumps with top-head pump jacks were also developed to recover oil. These devices used top head drive piston pumps and stand pipes for the fluid discharge. This basic technology, albeit in more advanced forms, is still in use today. Of course today, pumping systems are used in a variety of applications and come in a variety of other forms.

[0003] Both the water well and oil well top head drive piston pumps had to address the problem of discharge of liquid at the surface. The liquid discharge needs to be directed and pumped. Many modern pumping techniques, for example, are called upon to pump underground fluid in a liquid sealed manner. This is particularly useful because in many applications the fluids being pumped can be hazardous to people and the environment, such as leachate removal from a landfill, oil and tar removal from petroleum or chemical facilities and clean up of remediation sites, tank farms, pipe lines, manufactured glass plant (MGP) sites, and caisson sumps. As a result, it is desirable to have a pumping system that prevents leakage.

[0004] Pumping is achieved in many conventional systems through a drive piston and foot valve cylinder pumping combination. A foot valve cylinder is located at the bottom of a riser pipe (or drop pipe) extending from the ground surface to a well or sump. The drive piston pumps fluid (liquid, waste, sludge, etc.) from the well by ratcheting the liquid upwards through the riser pipe. The foot valve has a check valve for selectively passing and blocking fluid. The drive piston has a similar check valve and actuates repeatedly over a stroke range in conjunction with the stationary foot valve to collect liquid into the riser pipe and then pump the liquid out of a well head.

[0005] To achieve pumping, the check valves of the drive piston and foot valve seat are in a push-pull relationship due to pressure in the riser pipe. On the up stroke of the drive piston, its check valve closes and creates a suction pressure that opens the check valve of the foot valve seat. This action draws liquid from the well into the riser pipe through the open foot valve seat. Liquid already in the riser pipe may be simultaneously pumped out by the upward force from the closed drive piston. On the down stroke of the drive piston, its check valve opens thereby collecting fluid above the drive piston, while the downward pressure closes the foot valve seat check valve thereby preventing additional liquid from collecting in the riser pipe. And the process repeats reciprocally.

[0006] Each check valve is to have a watertight seal at its base. Liquid passes through the valve's bottom then up and out through the valves side vents around the check ball. Hard steel foot valve seats formed of materials such as brass have thick leather u-cups on the outside to maintain a tight seal against the riser pipe. The stainless steel check balls inside the foot valve seat engage a hard and durable seal plate surface formed in the seat to seal the seat's inlet. Yet, it has been found that this inlet sealing still results in leakage in conventional systems. For example, when using a resin material such as DELRIN (available from E.I. du Pont of Wilmington, Del.) for both the foot valve seat and drive piston, the stainless steel check balls do not form a tight seal throughout the life of the device. With continual pumping, material build up on the inlet seal as well as material wear will scratch and groove the seal thus degrading performance of the check valve.

[0007] While different materials could be used to form the foot valve seat and drive piston, materials such as DELRIN are preferred because of material cost, low friction, light weight, durable abrasion resistance, and the wide range of chemical compatibility. It has been found that over time when pumping gritty material and pumping at depths of 100' or more the foot valve and drive piston leak at the check ball valve seat on both the drive piston and foot valve. Reasons for the seal failure between the top end coupling of the foot valve cylinder assembly include the grooves or scratches formed at the seal point of the foot valve seat and drive piston.

[0008] Therefore, there is a need for a stronger more durable non-scratch, non-grooving valve seat. It is also desirable to retain the outside housing material as DELRIN or another material with advantages in strength, durability, machinability, low friction, chemical compatibility, and low cost.

SUMMARY OF THE INVENTION

[0009] Provided are various techniques for forming a check valve in a drive piston valve or foot valve in a fluid pumping system, in particular a system for use in accessing underground fluids. Example applications include leachate removal from a landfill, oil and tar removal from petroleum or chemical facilities and clean up of remediation sites, and the like. The check valve may include a valve seat, or sealing plate, in the form of a non-compressible (e.g., metal or ceramic) sealing plate which is retained within the valve assembly by a compressible, resilient mating element. By forming the valve seat of a material (e.g., metal) different than the material of the valve assembly housing (e.g., a resin), the wear problems of conventional check ball engagement seals may be alleviated.

[0010] In some examples, the valve seat may have a truncated corner that forms the sealing engagement with a check ball. The truncated corner helps ensure a tight seal over a long lifetime by, for example, preventing chemical encrustation build-up or other containment at the sealing edge.

[0011] In accordance with an embodiment, provided is a valve assembly for a pumping apparatus that pumps liquid through a riser pipe, the valve assembly comprising: a housing positioned in the riser pipe for communicating fluid from a first side of the housing to a second side of the housing through an inlet, the housing defining an inner chamber for liquid flow; a check valve comprising a check ball disposed within the inner chamber and movable from a closed position blocking liquid flow through the chamber and an opened position allowing liquid flow through the chamber; and a metal or ceramic sealing plate disposed at the inlet and having an inner sealing corner to engage the

check ball when the check ball is in the closed positioned, the sealing plate having a resilient sealing member at an outer wall for sealing the sealing plate against a wall of the inner chamber.

[0012] In accordance with another embodiment, provided is a pumping apparatus comprising: a frame; a piston rod drive assembly mounted to the frame for actuating a piston rod in a riser pipe to pump fluid through the riser pipe; a discharge head mounted at a well head for transferring pumped fluid from the riser pipe; a drive piston apparatus affixed to a distal end of the piston rod, the drive piston apparatus having a housing, a first check valve within said housing, said first check valve comprising a first flow chamber having an inlet and outlet, and a first metal or ceramic sealing plate disposed at the inlet of the first flow chamber and engaging the flow chamber through a first resilient sealing member at an outer wall of the first sealing plate; and a foot valve apparatus mounted in the riser pipe and having a housing, a second check valve comprising a second flow chamber having an inlet and an outlet, and a second metal or ceramic sealing plate disposed at the inlet of the second flow chamber and engaging the second flow chamber through a second resilient sealing member at an outer wall of the second sealing plate.

[0013] In accordance with another example provided is a method of pumping fluid from an underground fluid source, the method comprising: mounting a discharge head at a well head; mounting a piston rod drive assembly to the discharge head for actuating a piston rod in a riser pipe extending from the discharge head to the underground fluid source to pump the fluid through the riser pipe; and attaching a drive piston apparatus to a distal end of the piston rod, the drive piston apparatus having a housing, a first check valve within said housing, said first check valve comprising a first flow chamber having an inlet and outlet, and a first metal or ceramic sealing plate disposed at the inlet of the first flow chamber and engaging the flow chamber through a first resilient sealing member at an outer wall of the first sealing plate.

BRIEF DESCRIPTION OF THE DRAWINGS

[0014] FIG. **1** illustrates a partial cross-section of an example pumping system including a drive motor and frame;

[0015] FIG. **2**A illustrates an expanded region of FIG. **1** showing a piston valve seat and foot valve seat in an example configuration and a first position;

[0016] FIG. **2**B is an illustration like that of FIG. **2**A but showing the piston valve seat and foot valve seat in a second position;

[0017] FIG. **3** is an illustration of an example drive piston assembly;

[0018] FIG. **4**A is an illustration of an o-ring check valve seat that may be used in the drive piston assembly of FIG. **3**;

[0019] FIG. **4**B is an illustration of an example of a truncated sealing corner for the valve seat in FIG. **4**A;

[0020] FIG. **4**C is an illustration of another example of a truncated sealing corner for the valve seat in FIG. **4**A;

[0021] FIG. **5** is an illustration of a vent plate for the drive piston assembly of FIG. **3**;

[0022] FIG. **6** is an illustration of an example foot valve assembly; and

[0023] FIG. **7** is an illustration of an o-ring check valve plate that may be used in the foot valve assembly of FIG. **6**.

DETAILED DESCRIPTION OF AN EXAMPLE

[0024] FIG. **1** illustrates a pumping system **100** that may be useful in pumping liquid, such as groundwater, hydrocarbons, tar, oil, chemicals or landfill leachate, through a well in a landfill or other geological site, for example, for collection analysis, consumption or disposal of the liquid. The system **100**, of the illustrated example, has a drive motor assembly **102** having a piston pump actuator **104** mounted to a frame **106** (illustrated partially uncovered to display the inside) and with two limit switches **107**, **108** for detecting a trigger element **109** for controlling operation of the drive motor **102**. The drive motor assembly **102** is mounted to a drilled well casing **110** (illustrated partially uncovered to display the inside), via a well head **111**, shown at the top surface (G) of a geological site. By way of example not limitation, the casing **110** may be formed of an organic polymer, such as polyvinyl chloride (PVC) or high density polyethylene (HDPE). Depending on the temperatures of the application other materials may be more suitable, such as particularly treated PVCs, like chlorinated polyvinyl chloride (CPVC). Stainless steel, black iron, or fiberglass may be used to form the casing **110**, as well. Example drive motor assemblies include the ANCHOR PUMP and TRIDENT PUMP assemblies available from Blackhawk Environmental, of Glenn Ellyn, Ill.

[0025] The linear drive motor assembly **102** controls the pump actuator **104** for use in fluid pumping. Example actuators include a reciprocating air-driven cylinder, a hydraulically-driven cylinder, a mechanically-driven actuator, and an electrically-driven cylinder. The linear drive motor assembly **102** may have a fixed travel distance with a fixed or adjustable cycle rate, for example. In yet other examples, the drive assembly **102** may have a variably-traveling cylinder and/or a fixed cycle rate or a windmill.

[0026] A hollow cylindrical casing or riser pipe **112** for channeling liquid extends into the well casing **110** at the geological site, and includes an upper end **114** and a lower end **115**. Although not shown, a hollow casing liner or sleeve may be used to line the casing **110** and improve piston rod movement. The ends of both the well casing **110** and the liner would permit liquid to pass through them during operation of the device. A discharge opening **116** of a discharge tee **117** is disposed near an upper end of the well casing **110** and sealably coupled to the well head **111** for removal of the liquid being pumped. The discharge opening **116** may be connected to a discharge conduit, for example, through which the liquid elevated from the well may be removed for subsequent collection, analysis, consumption, disposal, or the like.

[0027] An actuating rod **118**, also known as the drive rod, piston rod, or sucker rod, is shown axially disposed within the casing **110**. The actuating rod **118** has an upper end **120** and a lower end **122**. The actuating rod **118** may be formed of materials such as those used for the casing **110**, for example and not by way of limitation. The rod **118** may be a chrome-plated stainless steel or other hardened material, including aluminum, TORLON (a polyamideimide) available from Solvay Advanced Polymers of Alpharetta, Ga., ULTEM available from General Electric Company of Fairfield, Conn., and TEFLON available from E.I. du Pont. A drive piston valve **124** is coupled to the rod **118** at the lower

end **122**, so that together the two form an assembly for elevating liquid toward the discharge opening **116**.

[0028] A foot valve unit **126** is disposed within riser pipe **112** and below the drive piston valve **124** and may remain in a substantially fixed position relative to the riser pipe **112** during movement of the piston assembly. The foot valve **126** may be disposed within a liner of the riser pipe **112**, for example. Alternatively to the embodiments shown, more than one drive piston valve **124** and/or more than one foot valve **126** may be incorporated in the device. Further in some examples, the foot valve **126** may be disposed outside the riser pipe **112**, sealably attached to the lower end **115** of the riser piper **112**.

[0029] Further still, while the drive piston valve **124** and the foot valve **126** are illustrated as ball valves, other valve structures may be used to allow liquid to flow through a valve aperture toward the discharge opening **116** and to prevent substantial back flow back into the underground reservoir.

[0030] By way of example, not limitation, the drive piston valve **124** and foot valve **126** may be formed of various materials such as the materials for the casing **110**. Preferably, the materials are chemically inert with respect to the fluid being pumped, resistant to corrosion, durable over long life cycles and can form a liquid tight seal with whatever materials are chosen for seals, such as those described herein. By way of example, not limitation, example materials include polytetrafluoroethylene (PTFE) and stainless steel. Other materials include industrial ceramics, chemically resistant organic polymers, and metallic alloys, a list provided by way of example, not limitation. In an example, the outer casings for the drive piston valve **124** and foot valve **126** are formed of DELRIN or PEEK (polyetheretherketone) (available from Victrex USA of Greenville, S.C., etc.).

[0031] FIG. **1** also illustrates an optional sealing assembly **128** between the frame and the discharge unit **117**. That sealing assembly **128** may be a stuffing box assembly. Example stuffing box assemblies include those described in U.S. application Ser. No. 11/132,524, entitled "Drain Cap Stuffing Box," the entirety of which is incorporated herein by reference. The sealing assembly **128**, for example, may be a two-part assembly including, a first sealing assembly as a stuffing box and a second sealing assembly **204** as a drain cap.

[0032] FIGS. **2**A and **2**B illustrate expanded views of the drive piston valve **124** and foot valve **126** in two different positions. The foot valve seat **126** has a check valve **200** in the form of a check ball **202** for sealing an inlet **204**, and the drive piston valve **124** has a check valve **206** in the form of a check ball **208** for sealing an inlet **210**. FIG. **2**A illustrates a first driving piston position where the drive piston **124** is on a upward stroke and the check valve **200** is opened by vacuum pressure in a region **212** between the valves **124** and **126** and check valve **206** is closed by downward pressure from a region **214** extending above valve **126**. In this configuration, fluid from a fluid reservoir **216** is collected into the region **212**, and fluid from the region **214** is pumped out through discharge tee **117**. FIG. **2**B illustrates a second driving piston position where the drive piston **124** is in a downward stroke and the check valve **200** is closed by the pressure in region **212** while the check valve **206** is open for communicating liquid from region **212** into the now-expanded region **214**.

[0033] In the form of a DELRIN, PEEK, or other resilient material of the drive piston unit **124**, it may be desired to use a sealing member compressibly extending between an inner wall of the riser pipe **112** and an outer surface of the unit **124**. In the illustrated examples of FIGS. **2**A and **2**B, u-cup sealing members **218** and **220** are positioned in outer wall receiving slots and formed of a resilient, compressible material with the u-cup end facing upward. For additional improvement in stroke movement and reducing scraping or friction points, chamfer edges **222** and **224** may be formed on the leading edge of the drive piston **124**.

[0034] To connect the drive piston **124** to the piston rod **118**, a rod coupler **226** is screw mounted to a vented opening end **228** of the drive piston **124** and to the piston rod **118** through connector bolt **230**.

[0035] FIG. **3** illustrates an exploded view of the drive piston **124**, showing an example implementation as a two-part assembly having a base member **300** and a cap member **302** that slidably and sealably engages the base member **300** over a sealing edge **304**, although the engagement is not limited to that shown. In the illustrated example, the sealing edge **304** is fitted with a connector ring **306**. An inlet **308** receives liquid from the reservoir and is capped by a check ball **310**. To provide for improved sealing of the check ball **310**, a separate, insertable sealing plate **312** is fitted against an inner wall **313** at a sealing end **314** of the inlet **308**.

[0036] FIG. **4**A illustrates an example sealing plate **312**. The sealing plate **312** is preferably formed of a hard, durable material that resists liquid scraping and grooving. Example materials include stainless steel, ceramic, brass, steel, and exotic steel materials like Super Stainless Steel for chemically aggressive pumping environments. Preferably, the sealing plate is formed of a hard generally non-compressible material capable of withstanding the repeated engagement/disengagement with the check ball **310** during pumping, while the drive piston **124** may be formed of a DELRIN or other wear-resistant plastic material. It is preferred not to use steel or other metals on both the housing and the check ball as that could result in galling of the steel-on-steel interfaces. The low-wear, low-resistance properties of DELRIN make it suitably compatible with a steel sealing plate.

[0037] The sealing plate **312** has an inner wall **316** for engaging the check ball **310** and an outer wall **318** to be disposed adjacent the inner wall **313**. The outer wall **318** may seal directly against the inner wall **313**, in which case, it will generally be desired to size the dimensions of the wall **318** to match that of the inner wall **313** to allow both assembly prior to operation and engagement maintenance of the plate **312** at the sealing end **314** during operation.

[0038] The outer wall **318** may be sealed against the inner wall **313** through a compression element such as an o-ring **320** partially recessed within receiving slot **322** machined into the plate **312**. Having a resilient compression element allows the sealing plate to be tightly engaged inside the drive piston **124**, but without damaging the inner housing wall. The o-ring **320** sealing element may engage the inner surface **313** or it may extend into a groove formed therein. That groove may be formed to receive only the o-ring **320** or the entire outer edge **318**, such as when the diameter of the sealing, plate **312** is larger than the inner diameter for wall **313**.

[0039] Other compressible seals may be used for the sealing plate **312**. The outer wall **318** as a portion of the metal plate **312** may be replaced by a compressible cap

forming the entire outer wall **313**. The cap may be glue mounted, screw mounted, molded, slidably engaged, or otherwise affixed to the metal portions of the seal plate **312**.

[0040] Further still, while the o-ring **320** may extend around the entire circumference of the plate **312**, alternatively the compressible sealing member may be formed over only a portion of that circumference and still form a tight seal.

[0041] Preferably, the inner wall **316** is spaced from the outer wall **318** to be flush with an inlet wall **319**, although alternatively the inner wall **316** may be spaced a shorter or longer distance from outer wall **318**.

[0042] With a metal sealing plate, it is possible that a metal sealing plate may gall against, and under constant valve actuation force from, the metallic check ball. The metal-on-metal contact has been found to be beneficial for quick actuation of the check ball, but using a sharp edge as the sealing ring is generally undesirable as the edge may damage the check ball or vice versa especially under chemical encrustation which may occur over time as certain liquid particulate is being pumped. Furthermore, it has been found that sharp corner seals may present an unstable contact from which a check ball may move laterally when in the closed, i.e., sealed, position.

[0043] To address these possibilities, the sealing plate **312** includes a truncated inner seal corner **323** for engaging with a check ball. The truncated corner **323** may be a flat-beveled edge, for example, formed from a conical cut to a right angle corner, as shown in FIG. **4**B. Beveled edge **323**A forms a flat mating surface for engaging the check ball. FIG. **4**C shows the truncated corner **323** in the form of a radial edge **323**B. The edge **323**B may be formed with a 1/32 inch radius, for example. The truncated edge **323** provides a mating with a check ball preventing lateral movement. The corner **323** may be designed to maintain a relative point-like contact, for example through using a tight radius, but displaces any chemical encrustation or other contaminant from damaging either the valve seat on the check ball during operation.

[0044] Returning to FIG. **3**, and further shown in top view of FIG. **5**, venting slots **324** are positioned around an upper end of the drive piston **124**. Three slots **324** are provided in the illustrated example, although larger or fewer numbers of slots could be used, including a generally continuous slot. Also shown in FIG. **3** are receiving slots **326** and **328** for the u-cup seals **218** and **220**, respectively.

[0045] Although not illustrated, it is noted that the sealing plate **312** may take on different shapes to marry against different inner housing geometries. Further still, the plate **312** may be further held in position by a lip ring protruding from the inner wall **312** a sufficient distance to provide support along a vertical access, but sufficiently small to allow plate insertion into the housing **300**.

[0046] An example of the foot valve seat **126** is further shown in FIG. **6**. A housing **400** defines a flow cavity **402** having an inlet **404** with a sealing end **406** for sealing with a check ball **408**. Like the drive piston **124**, the foot valve **126** has a sealing plate **410** disposed at the sealing end **406** for engaging the check ball **408** in closed position. The sealing plate **410** (see also FIG. **7**) has an inner edge **412** and an outer edge **414** adjacent an inner side wall **416** of the housing **400**. The outer edge **414** may seal directly against the inner wall **416** or through a compression element such as an o-ring **418** partially recessed within a receiving slot **420** machined into the plate **410**.

[0047] The sealing plate **410** includes a truncated sealing corner **421** which may be like the truncated corner **323** described above.

[0048] An o-ring **422** is provided in mating slots for further allowing for a tightened seal in the riser pipe **112**. Chamfered lead edges **424** and **426** are also provided in the illustrated example.

[0049] For retaining the check ball **408** within the cavity **402**, a nylon rod may be extended across the diameter of the cavity **402** through opposing bore holes **428** (one shown). This allows a nearly continuous vent for liquid fluid around outlet end **430** of the foot valve **126**.

[0050] Although certain apparatus constructed in accordance with the teachings of the invention have been described herein, the scope of coverage of this patent is not limited thereto. On the contrary, this patent covers all embodiments of the teachings of the invention fairly falling within the scope of the appended claims either literally or under the doctrine of equivalence.

What is claimed is:

1. A valve assembly for a pumping apparatus that pumps liquid through a riser pipe, the valve assembly comprising:

a housing positioned in the riser pipe for communicating fluid from a first side of the housing to a second side of the housing through an inlet, the housing defining an inner chamber for liquid flow;

a check valve comprising a check ball disposed within the inner chamber and movable from a closed position blocking liquid flow through the chamber and an opened position allowing liquid flow through the chamber; and

a metal or ceramic sealing plate disposed at the inlet and having an inner sealing corner to engage the check ball when the check ball is in the closed positioned, the sealing plate having a resilient sealing member at an outer wall for sealing the sealing plate against a wall of the inner chamber.

2. The valve assembly of claim **1**, wherein the inner sealing corner of the sealing plate comprises a conical, beveled surface for engaging the check ball.

3. The valve assembly of claim **1**, wherein the inner sealing corner of the sealing plate comprises a radial corner for engaging the check ball.

4. The valve assembly of claim **1**, wherein the outer wall of the sealing plate comprises a mating slot, and wherein the resilient sealing member is an o-ring partially recessed in the mating slot and extending beyond the outer wall for sealably engaging with the wall of the inner chamber.

5. The valve assembly of claim **1**, wherein the sealing plate is formed from a material selected from the group consisting of stainless steel, brass, and steel.

6. The valve assembly of claim **5**, wherein the housing is formed of a low-wear resin material.

7. The valve assembly of claim **6**, wherein the housing is formed of a DELRIN or a PEEK material.

8. The valve assembly of claim **1**, wherein the resilient sealing member is releasably positioned between the outer wall of the sealing plate and the wall of the inner chamber, for replacing the resilient sealing member separately from the sealing plate.

9. The valve assembly of claim **1**, further comprising:

a drive piston rod attached to the housing for actuating movement of the housing and for moving the check valve between the closed blocking position and the

open position under pressure within the riser pipe. wherein the housing comprises a cap member slidably engaged with a base member at least partially defining the inner chamber, the cap member having at least one venting slot, the drive piston rod being attached to a cap member.

10. A pumping apparatus comprising:

a frame;

a piston rod drive assembly mounted to the frame for actuating a piston rod in a riser pipe to pump fluid through the riser pipe;

a discharge head mounted at a well head for transferring pumped fluid from the riser pipe;

a drive piston apparatus affixed to a distal end of the piston rod, the drive piston apparatus having a housing, a first check valve within said housing, said first check valve comprising a first flow chamber having an inlet and outlet, and a first metal or ceramic sealing plate disposed at the inlet of the first flow chamber and engaging the flow chamber through a first resilient sealing member at an outer wall of the first sealing plate; and

a foot valve apparatus mounted in the riser pipe and having a housing, a second check valve comprising a second flow chamber having an inlet and an outlet, and a second metal or ceramic sealing plate disposed at the inlet of the second flow chamber and engaging the second flow chamber through a second resilient sealing member at an outer wall of the second sealing plate.

11. The pumping apparatus of claim **10**, wherein the outer wall of the first sealing plate comprises a mating slot, and wherein the first resilient sealing member is an o-ring partially recessed in the mating slot and extending beyond the outer wall of the first sealing plate for sealably engaging the wall of the first inner chamber, and wherein the outer wall of the second sealing plate comprises a mating slot, and wherein the second resilient sealing member is an o-ring partially recessed in the mating slot and extending beyond the outer wall of the second sealing plate for sealably engaging the wall of the second inner chamber.

12. The pumping apparatus of claim **10**, wherein the first sealing plate and the second sealing plate are formed from a material selected from the group consisting of stainless steel, brass, and steel.

13. The pumping apparatus of claim **12**, wherein the housing of the drive piston apparatus and the housing of the foot valve apparatus are formed of a low-wear resin material.

14. The pumping apparatus of claim **12**, wherein the housing of the drive piston apparatus and the housing of the foot valve apparatus are formed of a DELRIN or a PEEK material.

15. The pumping apparatus of claim **10**, wherein the first resilient sealing member is releasably positioned between the outer wall of the first sealing plate and the wall of the first inner chamber for replacing the first resilient sealing member separately from the first sealing plate, and wherein the second resilient sealing member is releasably positioned between the outer wall of the second sealing plate and the wall of the second inner chamber for replacing the second resilient sealing member separately from the second sealing plate.

16. The pumping apparatus of claim **10**, wherein at least one of the first sealing plate and the second sealing plate comprise an inner sealing corner to engage a check ball when the check ball is in a closed positioned, the inner sealing corner having a conical, beveled surface for engaging the check ball.

17. The pumping apparatus of claim **10**, wherein at least one of the first sealing plate and the second sealing plate comprise an inner sealing corner to engage a check ball when the check ball is in a closed positioned, the inner sealing corner having a radial corner for engaging the check ball.

18. A method pumping fluid from an underground fluid source, the method comprising:

mounting a discharge head at a well head;

mounting a piston rod drive assembly to the discharge head for actuating a piston rod in a riser pipe extending from the discharge head to the underground fluid source to pump the fluid through the riser pipe; and

attaching a drive piston apparatus to a distal end of the piston rod, the drive piston apparatus having a housing, a first check valve within said housing, said first check valve comprising a first flow chamber having an inlet and outlet, and a first metal or ceramic sealing plate disposed at the inlet of the first flow chamber and engaging the flow chamber through a first resilient sealing member at an outer wall of the first sealing plate.

19. The method of claim **18**, further comprising:

affixedly mounting a foot valve apparatus to a distal end of the riser pipe, the foot valve apparatus having a housing, a second check valve comprising a second flow chamber having an inlet and an outlet, and a second metal or ceramic sealing plate disposed at the inlet of the second flow chamber and engaging the second flow chamber through a second resilient sealing member at an outer wall of the second sealing plate.

20. The method of claim **19**, wherein the outer wall of the first sealing plate comprises a mating slot, and wherein the first resilient sealing member is an o-ring partially recessed in the mating slot and extending beyond the outer wall of the first sealing plate for sealably engaging the wall of the first inner chamber, and wherein the outer wall of the second sealing plate comprises a mating slot, and wherein the second resilient sealing member is an o-ring partially recessed in the mating slot and extending beyond the outer wall of the second sealing plate for sealably engaging the wall of the second inner chamber.

21. The method of claim **19**, wherein the first sealing plate and the second sealing plate are formed from a material selected from the group consisting of stainless steel, brass, and steel.

22. The method of claim of claim **19**, wherein the housing of the drive piston apparatus and the housing of the foot valve apparatus are formed of a DELRIN or a PEEK material.

23. The method of claim **19**, further comprising:

forming the first resilient sealing member to be releasably detachable from the outer wall of the first sealing plate for replacing the first resilient sealing member separately from the first sealing plate; and

forming the second resilient sealing member to be releasably detachable from the outer wall of the second sealing plate for replacing the second resilient sealing member separately from the second sealing plate.

24. The method of claim **19**, further comprising:

forming at least one of the first sealing plate and the second sealing plate to comprise an inner sealing corner to engage a check ball when the check ball is in a closed positioned, the inner sealing corner having a conical, beveled surface for engaging the check ball.

25. The method of claim **19**, further comprising:

forming at least one of the first sealing plate and the second sealing plate to comprise an inner sealing corner to engage a check ball when the check ball is in a closed positioned, the inner sealing corner having a radial corner for engaging the check ball.

* * * * *