US 20070199166A1

(19) United States

(12) Patent Application Publication

Peschmann

(10) Pub. No.: US 2007/0199166 A1

(43) Pub. Date: Aug. 30, 2007

(54) RAMP KIT

(76) Inventor: Joseph J. Peschmann, Plover, WI (US)

Correspondence Address:
MCDONALD HOPKINS CO., LPA
2100 BANK ONE CENTER
600 SUPERIOR AVENUE, E.
CLEVELAND, OH 44114-2653 (US)

(21) Appl. No.: 11/515,428

(22) Filed: Sep. 1, 2006

Related U.S. Application Data

(63) Continuation of application No. 60/713,450, filed on Sep. 1, 2005.

Publication Classification

(51) Int. Cl.
E01D 1/00 (2006.01)

(52) U.S. Cl. 14/69.5

(57) ABSTRACT

A ramp kit of ramp components packaged in a disassembled condition for shipping and storage generally comprising a plurality of elongated side members, a plurality of cross members having an integrally formed fastener engagement boss, and a plurality of threaded fasteners for connecting the cross members to the elongated side members to assemble the ramp. The ramp kit may also include a drive member for installing and removing the threaded fasteners as well as components being configured to be capable of nesting along their lengths to reduce the shipping size of the disassembled components.

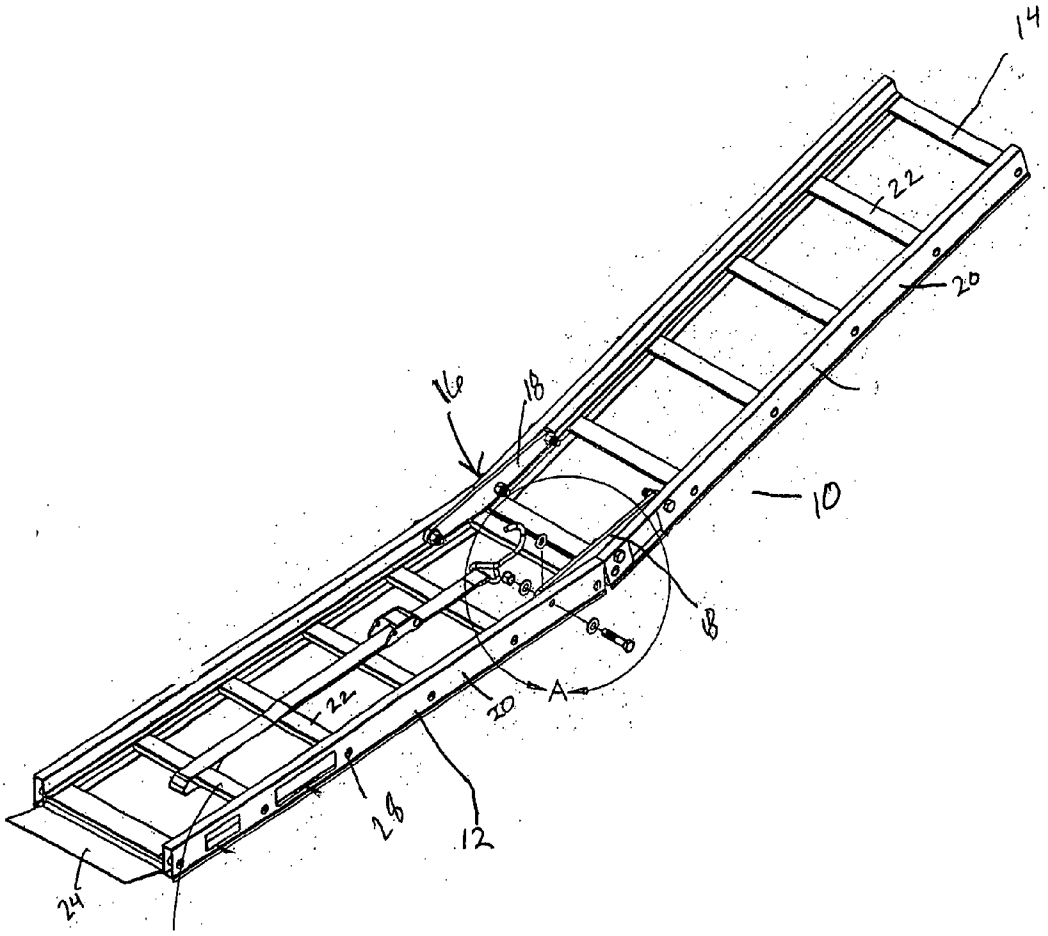

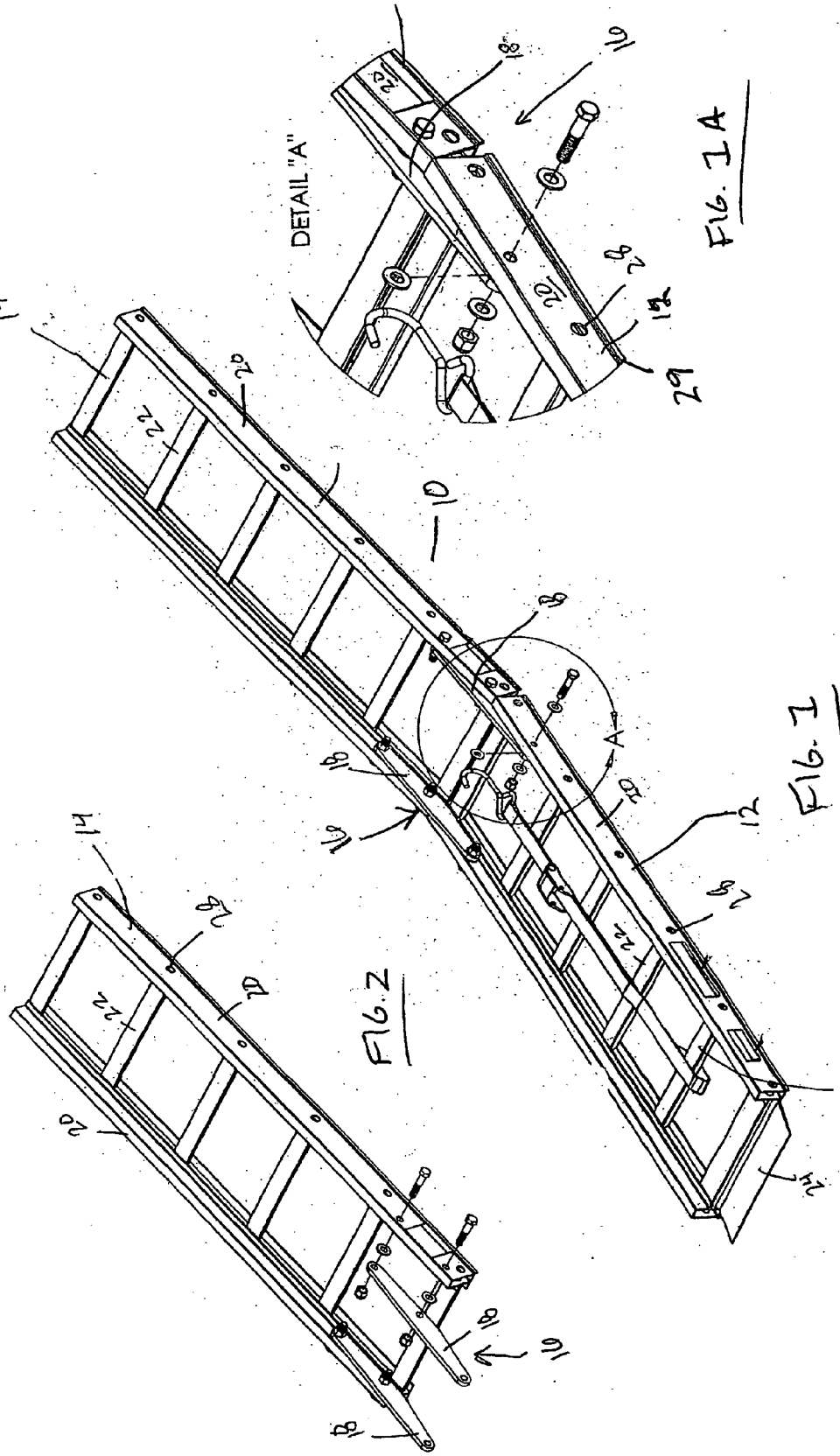

FIG. 1A

FIG. 1

FIG. 2

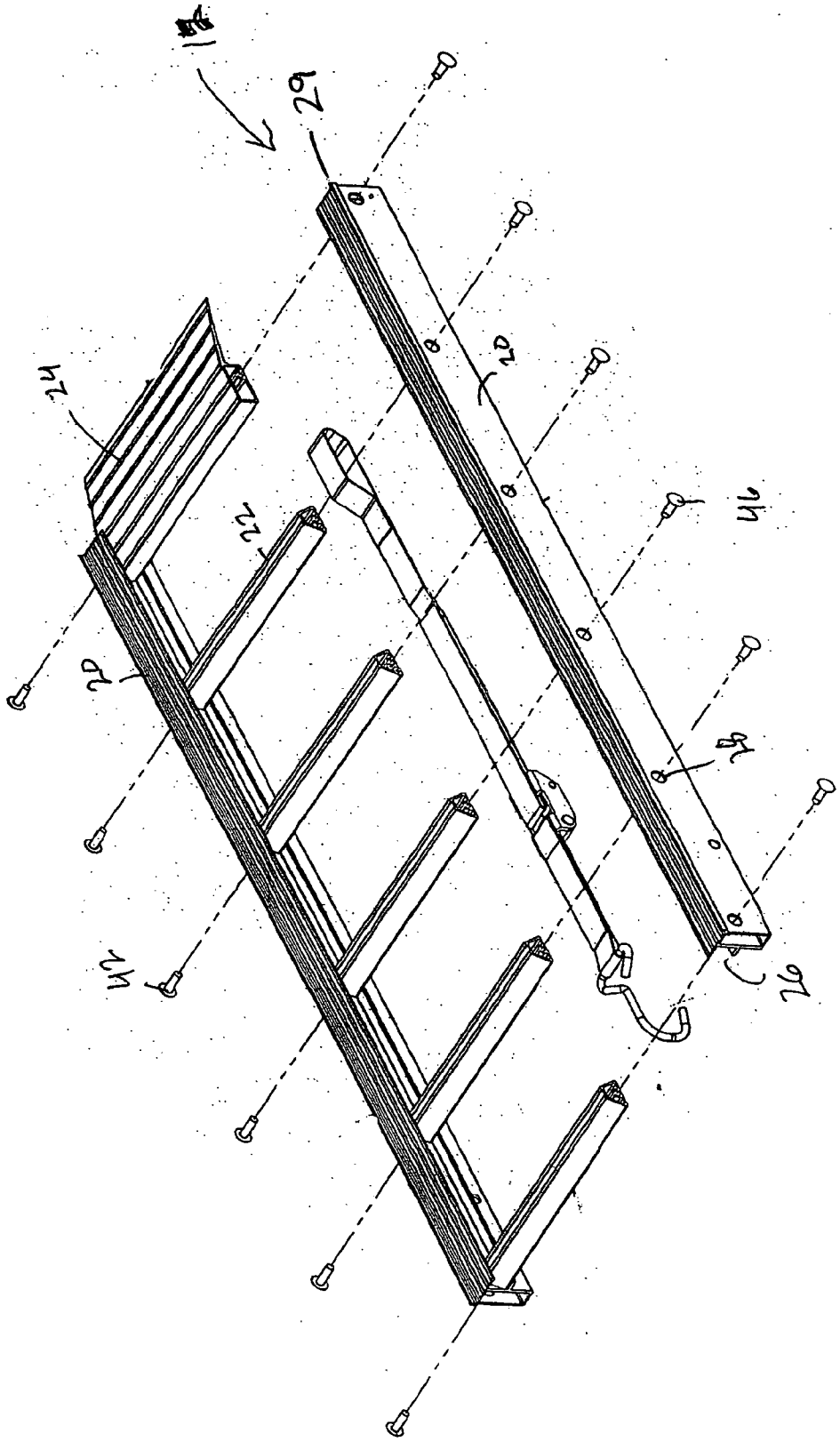

FIG. 3

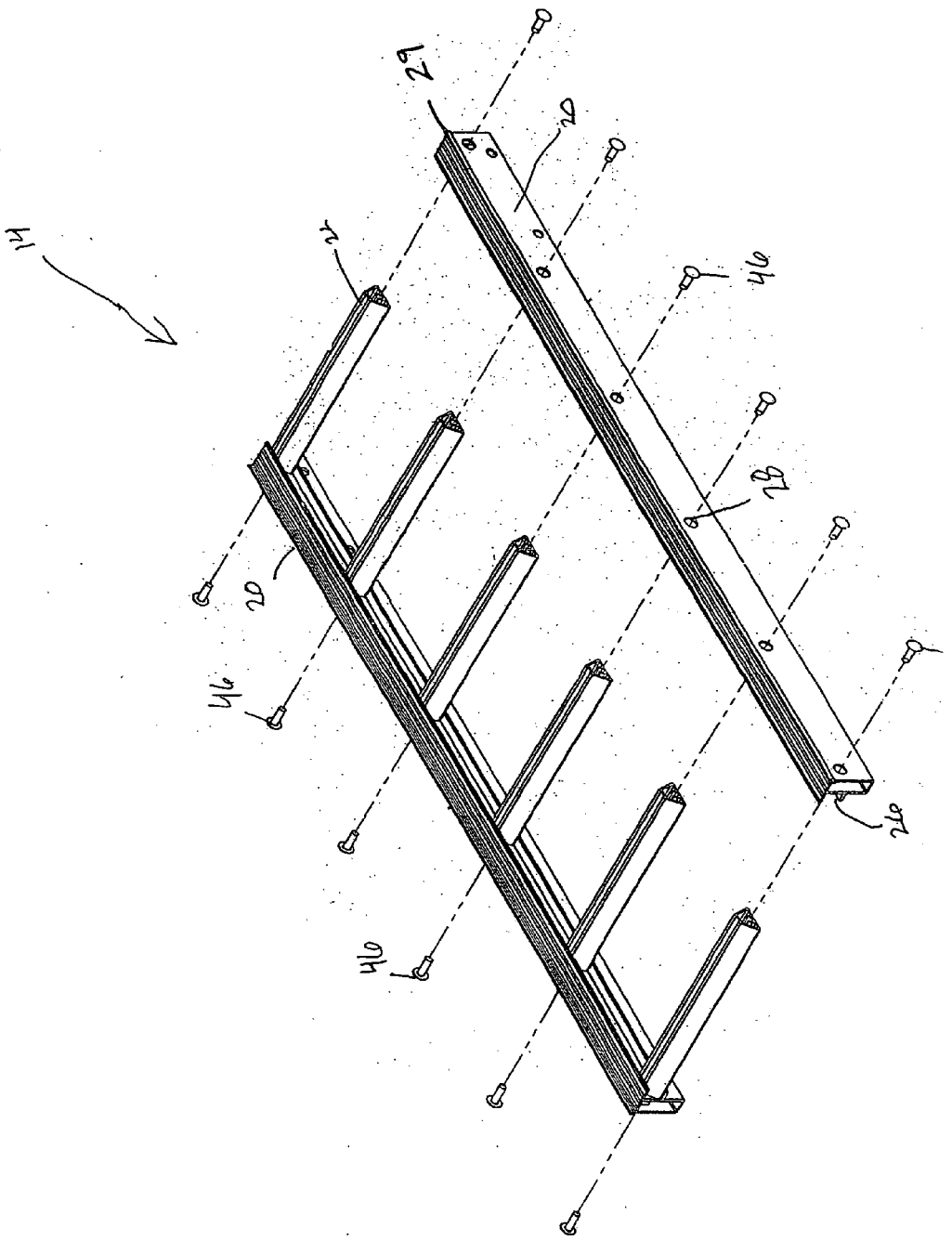

FIG. 4

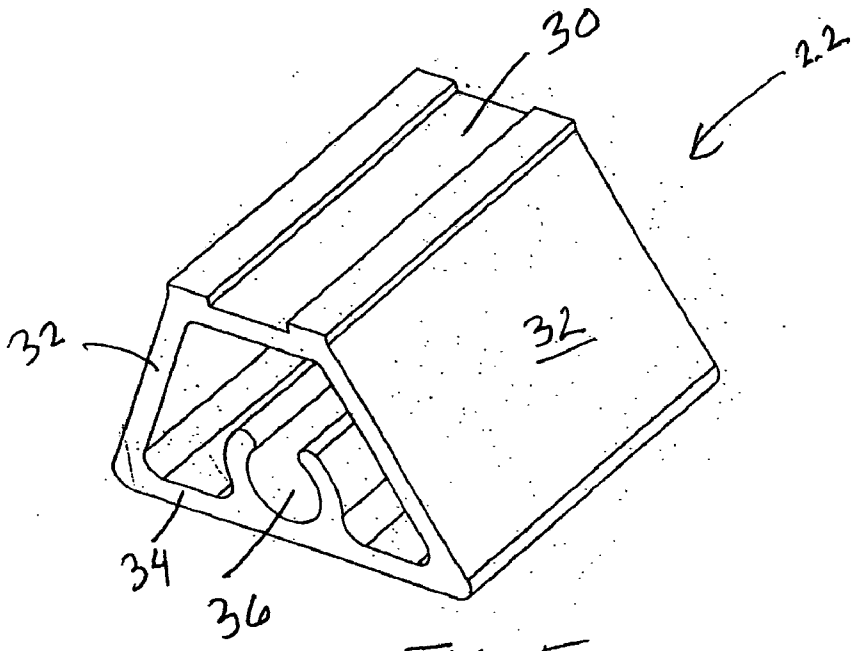

FIG. 5

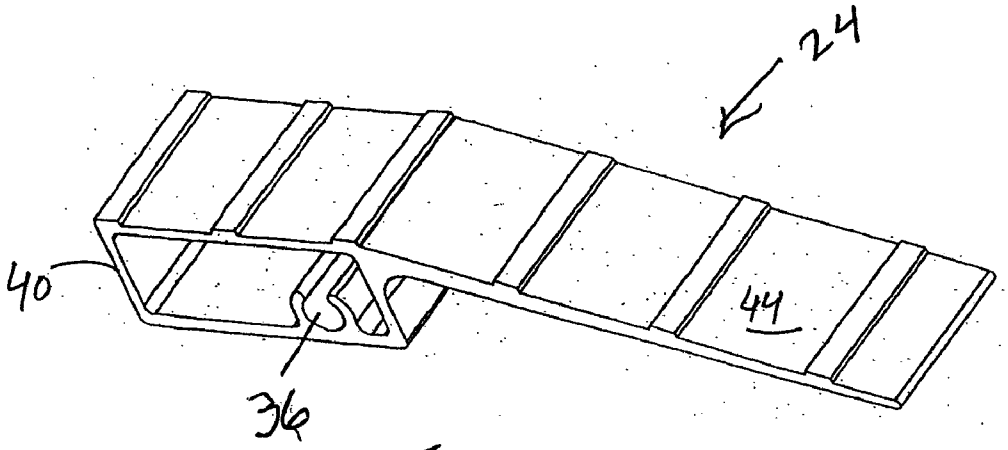

FIG. 6

RAMP KIT

CROSS-REFERENCE TO RELATED APPLICATIONS

[0001] This application claims priority from U.S. Provisional Patent Application No. 60/713,450 filed on Sep. 1, 2005, which is hereby incorporated by reference herein.

FIELD OF INVENTION

[0002] The present invention relates generally to ramps, and more particularly, to ramp kits of ramp components packaged in a disassembled condition for shipping and storage.

BACKGROUND OF THE INVENTION

[0003] Numerous types of ramps are used to assist in the loading and unloading of objects from elevated positions, including transportation vehicles. Particularly, trucks, vans, trailers and the like utilize ramps to assist in the loading of objects such as ATVs, motorcycles, lawnmowers, etc. Due to the required length of these ramps, it is advantageous that some ramps are foldable so as to increase their use length and decrease their storage length, while other ramps may be one-piece units. One such foldable ramp is disclosed in commonly assigned U.S. patent application Ser. No. 10/900,023, entitled Foldable Ramp Having Rung Hinge filed on Jul. 27, 2004 (U.S. Publication No. 20050055783, published Mar. 17, 2005), and herein incorporated by reference herein.

[0004] Most ramps are typically manufactured from aluminum to promote a light ramp with overall strong properties. Therefore, a user can lift or unfold a ramp alone when loading or unloading a vehicle from a transportation vehicle. Further, these ramps are often welded together which increases the costs associated with manufacturing the ramps and also requires skilled personnel to operate the welding equipment. However, these ramps may also be riveted together. Again, such construction techniques require special rivet fasteners that must be installed by trained personnel. As such, the method of manufacture greatly increases the time and cost associated with producing such ramps.

[0005] Further, ramps manufactured by welding or riveting are shipped and sold in their end-use, constructed state, which makes transporting the ramps particularly cumbersome and expensive given their overall shape and length. And should a portion of the ramp bend, break, or be damaged during shipping or use, the ramp is often discarded in its entirety or attempted to be fixed in any unconventional manner.

SUMMARY OF THE INVENTION

[0006] The invention disclosed herein overcomes at least some of the disadvantages associated with the prior art by providing a ramp kit of ramp components packaged in a disassembled condition for ease of shipping and storage. Such a kit permits the ramp to be manufactured with replaceable parts and shipped disassembled so as to reduce packaging and shipping sizes. Also, such a construction permits the user to assembly the ramp after purchase and properly repair the ramp if required from available replacement parts.

[0007] A ramp kit of ramp components packaged in a disassembled condition for shipping and storage generally comprising a plurality of elongated side members, a plurality of cross members having an integrally formed fastener engagement boss, and a plurality of threaded fasteners for connecting the cross members to the elongated side members to assemble the ramp. The ramp kit may also include a drive member for installing and removing the threaded fasteners as well as components being configured to be capable of nesting along their lengths to reduce the shipping size of the disassembled components.

[0008] The invention will be more fully described in the following written description with reference to the accompanying drawings.

BRIEF DESCRIPTION OF THE SEVERAL VIEWS OF THE DRAWING

[0009] FIG. **1** is a perspective, underside view of a foldable ramp in an assembled state.

[0010] FIG. **1**A is an exploded view of the ramp shown within circle A of FIG. **1**.

[0011] FIG. **2** is view of the bottom section of the ramp of FIG. **1** showing the hinge device.

[0012] FIG. **3** is a partially exploded view of the top section of the ramp of FIG. **1**.

[0013] FIG. **4** is a partially exploded view of the bottom section of the ramp of FIG. **1**.

[0014] FIG. **5** is a segmented view of the cross member of the ramp of FIG. **1**

[0015] FIG. **6** is a segmented view of the end support member of the ramp of FIG. **1**.

DETAILED DESCRIPTION OF THE INVENTION

[0016] The ramp described herein is capable of being manufactured and shipped in an unassembled condition so as to keep the packaging and shipping sizes as small as possible. Therefore, the ramp is intended to be assembled by the customer, possibly with tools supplied with the ramp kit. Further, any damaged components can be removed or desired changes the configuration of the structure can be accomplished by user disassembly of the ramp and replacement of components. This is a distinct advantage over previously constructed welded and riveted ramps. And while the preferred embodiment of the invention is directed to a foldable vehicle ramp, it should be clear to anyone reading and understanding this description that the invention could be utilized for any type of ramp whether foldable or otherwise and that the following description of the preferred embodiment should in no way limit the scope of the invention or the claims as appended.

[0017] Referring now to the drawings, and in particular to FIG. **1**, a ramp, generally designated **10**, includes a first or upper ramp section **12** and a second or bottom ramp section **14**. The first and second ramp sections **12**,**14** are pivotally connected to each other by a hinge **16**. As shown in FIG. **1**A, the hinge **16** comprises a pair of brackets **18** connected to the inner surface of the side members **20** of both the first and second ramp section **12**,**14**. Each hinge bracket **18** prefer-

ably comprises an A-shaped member having apertures therethrough for connecting to the first or second ramp members **12**,**14**. For example, as best shown in FIGS. **1**A and **2**, one side of the A-shaped bracket **18** is bolted to the second ramp section **14** by a two-bolt connection while the other end of the bracket **18** is pivotally connected to the first ramp section **12** or visa versa. Therefore, one of the ramp sections can pivot relative to the other ramp section so that the ramp **10** can be positioned between an extended, operable position shown in FIG. **1** and a folded, storage position (not shown).

[**0018**] The first ramp section **12** (shown in FIG. **3**) and the second ramp section **14** (shown in FIG. **4**) are constructed having similar components, namely, a pair of elongated side members **20**, rungs or cross members **22**, and an end support member **24**. Side members **20** comprise elongated tubular members having a longitudinal channel **26** located on an inner surface thereof. The end support member **24** and the cross members **22** each have predetermined lengths, first and second ends, and a fastener engagement boss **36** integrally formed therein. The ends of end support member **24** and cross members **22** are capable of nesting within the longitudinal channels **26** of the side members **20** and being connected thereto through mounting apertures **28**.

[**0019**] As best shown in FIG. **5**, the cross member **22** comprises an elongated tubular member having a support surface **30**, a pair of side walls **32**, a base **34**, and a bolt engaging boss **36** (a C-shaped channel at a central portion thereof for receiving a self-tapping screw). Preferably, the elongated members **20**, the cross members **22**, and the end support members **24** are each integrally formed from a light-weight material, preferably extruded aluminum, while any other suitable materials can be used. The end support member **24**, as best shown in FIG. **6**, comprises a box-shaped base **40** having a fastener engaging boss **36** therethrough and an inclined surface **44** extending therefrom. All of the components of the ramp **10** are preferably manufactured from aluminum so as to provide a lightweight component having a high strength level.

[**0020**] The ramp **10** is constructed wherein self-tapping screws **46** are inserted through the mounting apertures **28** of the side members **20** and engage the fastener engaging bosses **36** formed in the cross members **22** and end support member **24**. Each cross member **22** and end support member **24** has screw bosses **36** formed during the aluminum extrusion process. The ¼-20×¾ zinc plated steel torx pan head type F screws **46** are self tapped into the bosses **36** using a hand tool or power tool bit which could be supplied in the ramp kit. The side members **20** are tightened to the cross members **22** and to the end support member **24** to form the upper ramp section **12** and lower ramp section **14**. Such a novel construction permits ease of assembly and disassembly so that the ramp **10** can be shipped disassembled to the customer for assembly, thus saving packaging and shipping space, as well as permitting the removal and replacement of damaged components. The screw design permits the ramp to flex under heavy loads with no weld stress points so the ramp can achieve a higher load rating (no welding failure).

[**0021**] As indicated above, the particular ramp design and construction enables the components to be prefabricated and packaged in a disassembled condition for shipping and storage in a ramp kit and assembled by the end user. Due to the disassembled construction and the nestable configuration of the ramp components, the ramp kit takes up substantially less shipping and storage space as opposed to the previously welded or riveted ramp constructions.

[**0022**] As such, a ramp kit of ramp components packaged in a disassembled condition for shipping and storage generally comprises a plurality of elongated side members **20**, a plurality of cross members **22**, and a plurality of threaded fasteners **42** for connecting the components. It is likely that the ramp kit would also include a tool as part of the ramp kit to enable the user to assemble and disassemble the ramp. However, depending upon the type of fasteners used, the ramp kit may not include a tool in that the user may be able to use a simple wrench or screwdriver to assemble the ramp.

[**0023**] The elongated side members **20** each have a predetermined length and a longitudinal channel **26** along their lengths. Any number of side members **20** can be provided having any number of predetermined lengths. As indicated below, due to ramp sections constructed with pairs of side members, it is preferable that there be at least two side members of similar length. At least one mounting aperture **28** is provided in the side members to connect the side members **20** to the cross members **22** and end support member **24**. Preferably, the mounting apertures **28** are located systematically along the side member **20** to provide proper spacing for the cross members **22**. Further, additional mounting apertures **28** may be provided so that additional cross member configurations can be achieved as desired **16**. The side member **20** also includes an upwardly extending side structure **29** extending along its length to provide a wall to prevent the accidental movement of an object off of the surface of the ramp.

[**0024**] The cross members **22** also have a predetermined length and a first and second end. Again, any number of side members **20** can be provided having any number of predetermined lengths. A fastener engagement boss **36** is integrally formed within the cross member wherein the ends are capable of insertion within the corresponding longitudinal channels **26** of a pair of side members **20** so that the fastener engagement bosses **26** align between corresponding mounting apertures **28**.

[**0025**] The threaded fasteners **42** are each capable of insertion within the mounting apertures **28** of the side members **20** and engagable with the fastener engagement bosses of the cross members **22** and end support members **24**. Any kind of threaded fastener can be utilized having any type of drive means, including Phillips, Standard, Hex-head, star-shaped, or any other know driving surface configuration. If a tool in included with the ramp kit, it would be required to engage the driving surface as provided.

[**0026**] The ramp kit and therefore the ramp **10** may or may not include at least one end support member **24**. The end support members **24** are of a predetermined length having first and second mounting ends. A fastener engagement boss **36** is integrally formed within the first and second mounting ends so that the fastener engagement bosses **36** align with the mounting apertures **28** or the side members **20**. Therefore, the ends of the support members **24** are capable of insertion within the corresponding longitudinal channels **26** of a pair of side members **20** and fastened thereto to assemble the ramp **13**. As shown in FIG. **6**, the end support member **24** preferably includes a lip portion **44** extending along at least a portion of the length of the body **40** and extending outwardly therefrom at a predetermined angle.

[0027] Preferably, the ramp kit provides the assembly of a ramp having pivotable upper and lower ramp sections. As described above, an upper ramp section **12** comprises a first pair of side members **20**, a plurality of cross members **22**. At least one support member **24** may also be utilized to form the upper ramp section **12**. A second pair of side members **20** and a plurality of cross members **22** form a lower ramp section **14**. A hinge device **16** joins the upper ramp section **12** and the lower ramp section **14** to create a pivotable ramp sp that the ramp sections **12**,**14** are pivotable between an extended, working position and a collapsed, storage position.

[0028] Of significant importance related to the reduced shipping size of the ramp kit, the components are configured to provide nesting during packaging and shipment. Particularly, the longitudinal channel **26** of the side members **20** and the cross members **22** and end support members **24** are configured such that the cross members **22** and the end support members **24** are capable of nesting along their lengths within the longitudinal channel **26** during packaging and shipment. Therefore, as the packaging size of the ramp is greatly reduced by provide a disassembled ramp kit, the packing size if further reduced by configuring several components to nest together thereby additionally reducing packaging space.

[0029] The invention has been described with reference to the preferred embodiment. Obviously, modifications and alternations will occur to others upon a reading and understanding of this specification. The claim as follows is intended to include all modifications and alterations insofar as they come within the scope of the claim or an equivalent thereof. Having thus described the invention, I claim:

1. A ramp kit of ramp components packaged in a disassembled condition for shipping and storage, said ramp kit comprising:

a plurality of elongated side members each having a predetermined length and a plurality of mounting apertures therethrough;

a plurality of cross members each having a predetermined length and a first and second end, a fastener engagement boss integrally formed within said first and second ends wherein said first and second ends are capable of alignment between a pair of side members so that said fastener engagement bosses align between corresponding mounting apertures;

a plurality of threaded fasteners capable of insertion within said mounting aperture and engagement with said fastener engagement boss to assemble said ramp; and

a drive member for installing and removing said threaded fasteners.

2. The ramp kit of claim 1 further comprising at least one end support member of a predetermined length having a first and second mounting end, a fastener engagement boss integrally formed within said first and second mounting ends wherein said first and second mounting ends are capable of alignment between a pair of side members so that said bolt engagement bosses align with said mounting apertures.

3. The ramp kit of claim 2 wherein said at least one end support member further comprises a lip portion extending along at least a portion of said length and extending outwardly therefrom at a predetermined angle.

4. The ramp kit of claim 3 wherein said elongated members, said cross members, and said end support members are each integrally formed from a light-weight material.

5. The ramp kit of claim 4 wherein said lightweight material is extruded aluminum.

6. The ramp kit of claim 5 wherein said elongated members include an upwardly extending side structure extending along their lengths.

7. The ramp kit of claim 1 wherein a damaged cross member can be replaced by threadedly disengaging said damaged cross member and threadedly engaging a new cross member.

8. The ramp kit of claim 1 wherein each of said cross members of a first predetermined length can be threadedly disengaged and replaced by cross members of a second predetermined length, thereby providing a ramp of a different width.

9. The ramp kit of claim 1 wherein a damaged support member can be replaced by threadedly disengaging said damaged support member and threadedly engaging a new support member.

10. A ramp kit of ramp components packaged in a disassembled condition for shipping and storage, said ramp kit comprising:

a plurality of elongated side members each having a predetermined length, a longitudinal channel along said length, and at least one mounting aperture providing access to said channel through said side member;

a plurality of cross members having a predetermined length and a first and second end, a fastener engagement boss integrally formed within said first and second ends wherein said ends are capable of insertion within corresponding longitudinal channels of a pair of side members so that said fastener engagement bosses align between corresponding mounting apertures;

a plurality of threaded fasteners each capable of insertion within said mounting aperture and engagement with said fastener engagement boss to connect said cross member to said elongated side members; and

wherein said cross members are configured to be capable of nesting along their lengths within the longitudinal channel of said elongated side members so as to reduce the shipping size of the disassembled components.

11. The ramp kit of claim 10 further comprising at least one end support member of a predetermined length having a first and second mounting end capable of insertion within corresponding longitudinal channels of a pair of side members, a fastener engagement boss integrally formed within said first and second mounting ends so that said fastener engagement bosses align with said mounting apertures.

12. The ramp kit of claim 11 wherein said support member is configured to be capable of nesting along its length within the longitudinal channel of said elongated side member so as to reduce the shipping size of the disassembled components.

13. The ramp kit of claim 12 wherein said at least one end support member further comprises a lip portion extending along at least a portion of said length and extending outwardly therefrom at a predetermined angle.

14. The ramp kit of claim 13 wherein said elongated members, said cross members, and said end support members are each integrally formed from a light-weight material.

15. The ramp kit of claim 14 wherein said lightweight material is extruded aluminum.

16. The ramp kit of claim 15 wherein said elongated members include an upwardly extending side structure extending along their lengths.

17. The ramp kit of claim 16 further comprising a drive member for installing and removing said threaded fasteners.

18. The ramp kit of claim 17 wherein a first pair of side members, a plurality of cross members, and at least one support member forms an upper ramp section and a second pair of side members and a plurality of cross members forms a lower ramp section.

19. The ramp kit of claim 18 further comprising a hinge device joining said upper ramp section and said lower ramp section to create a pivotable ramp, wherein said ramp sections are pivotable between an extended, working position whereby said lip portion cooperates to support the ramp and a collapsed, storage position.

* * * * *