Jan. 19, 1960 M. HUTTERER 2,921,710

AUTOMATIC SHELL DOOR LOCK

Filed May 20, 1957

Fig. 1.

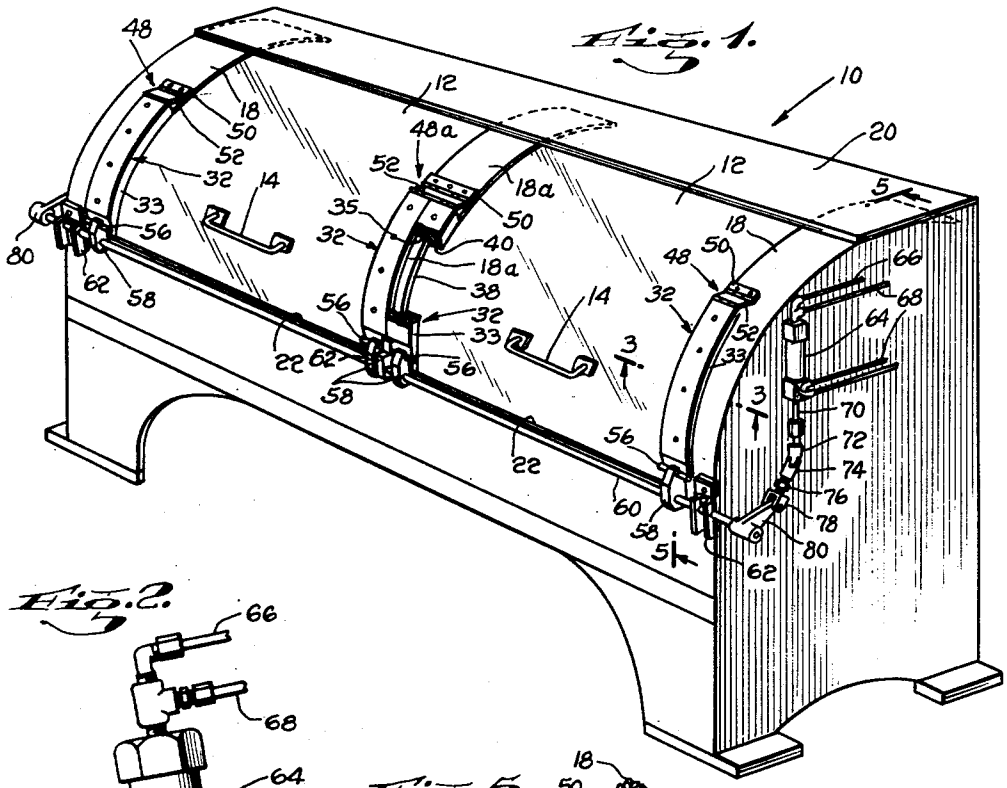

Fig. 2.

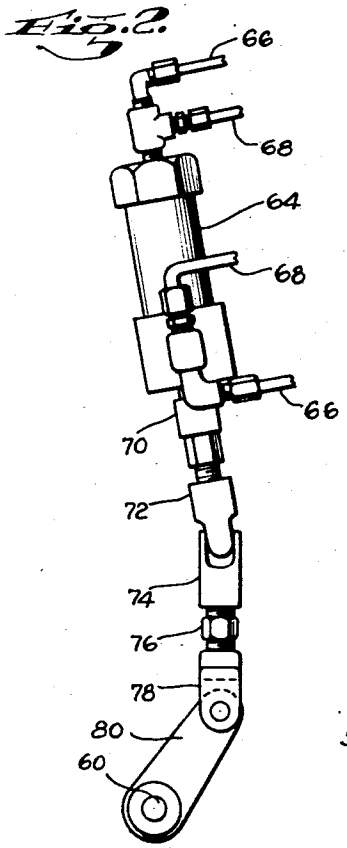

Fig. 5.

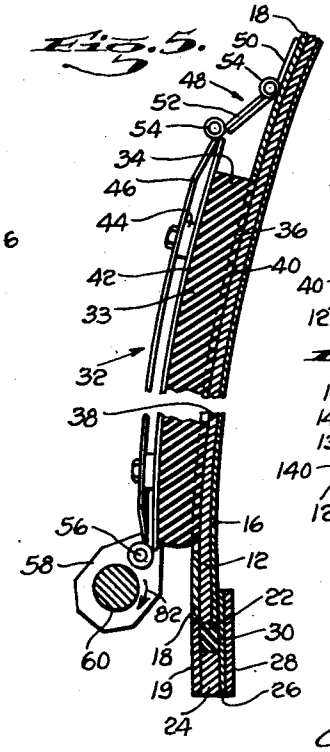

Fig. 3.

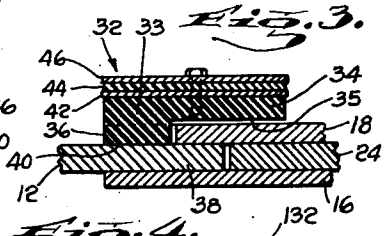

Fig. 4.

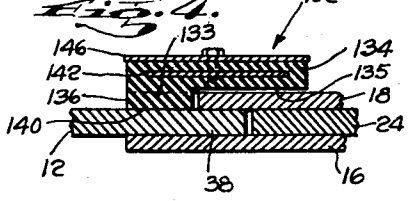

INVENTOR
MARTIN HUTTERER
BY
Jesse Bauer
ATTORNEY

United States Patent Office 2,921,710 Patented Jan. 19, 1960

2,921,710

AUTOMATIC SHELL DOOR LOCK

Martin Hutterer, Brooklyn, N.Y., assignor to Cummings-Landau Laundry Machine Company, Inc., Brooklyn, N.Y., a corporation of New York

Application May 20, 1957, Serial No. 660,139

13 Claims. (Cl. 220—41)

This invention relates to commercial washing machines, but is more particularly concerned with structures for fluid tightly sealing the doors of such machines.

To those who are familiar with commercial washing machine construction, it will be understood that garments to be washed are placed within the confines of a rotating drum that is enclosed within a housing or shell having access doors, known as shell doors. In order to carry out the washing cycle, the drum within which the garments are contained, is rotated. A washing fluid encompassing a portion of the drum is agitated by the rotating drum. Because the rotating drum severely agitates the washing fluid and actually performs a pumping action, the fluid is pumped out of the machine housing or shell through any openings that may be available to it. Essentially the details of the machine shell are such that the same is of substantially closed construction and therefore generally leakage of the agitated washing fluid is limited.

However, as is known in the washing machine art, certain openings must be made available in order that access to the rotating drum is easily accomplished. Among these openings are the shell doors that move between open and closed positions on the shell of the machine. In order that access to the rotating drum may be easy and rapid, the shell doors must of necessity be freely movable. In consequence, they are generally guided loosely for movement between inner and outer runner members. The looseness of the shell doors thus provide the openings whereby the severely agitated washing fluid is actually pumped in its escape from the interior of the machine shell. It is this area of the machine that has caused the greatest difficulty in sealing.

It is an object of this invention to provide a seal about the loose fitting shell doors that will eliminate the leakage found heretofore in the class of washing machines as described.

It is another object of the invention to provide a structure that will seal the shell doors fluid tightly, quickly and easily with a minimum of wear on the cooperating structural elements.

Still another object of the invention is to provide a sealing structure of unique characteristics and operation, yet one that will move the shell door into fluid tight sealing engagement without requiring wholesale modification of existing machine structures. Accordingly, a feature of the invention resides in moving the shell door to form a fluid tight seal with the inner runner, a member that is also normally utilized for the purpose of guiding the movement of the door. This feature permits advantage to be taken of existing structures of the machine to perform a unique sealing function.

Because commercial washing machines may have more than one access shell door, it is a further object of the invention to provide like sealing structures for each of the shell doors and an actuating mechanism that will operate each of said sealing structures simultaneously.

In furtherance of the objects of the invention, a unique feature resides in actuating the sealing means in a manner

such that the same moves as a body in substantially parallel relationship to the shell door, moving the door into sealing engagement with the inner runner and, at the same time, applying a force to the door in a direction as to move the same into a further closed position.

Other and further objects of my invention reside in the structures and arrangements hereinafter more fully described with reference to the accompanying drawings in which:

Fig. 1 is a perspective view of a commercial washing machine disclosing the sealing arrangement in accordance with the teaching of the invention.

Fig. 2 is an enlarged view of a portion of the actuator mechanism.

Fig. 3 is a transverse section of the sealing bands taken along lines 3—3 of Fig. 1.

Fig. 4 is a transverse section of a modified sealing band as it would be taken substantially along the lines 3—3 of Fig. 1.

Fig. 5 is an enlarged longitudinal sectional view of the sealing band taken along lines 5—5 of Fig. 1.

Referring now to Fig. 1 of the drawing, the washing machine housing and shell construction is generally identified by the numeral **10**. Enclosed within the washing machine shell **10** is a rotatable drum (not shown) in which the garments to be washed are inserted. A washing fluid is admitted into the shell **10** about the rotatable drum after which the drum is rotated to tumble the garments in the fluid. Access to the rotating drum is afforded by a door or doors **12** slidably mounted on the front of the shell **10**.

The doors **12** are moved to and from their closed position as shown in Fig. 1 by an operator who manually grasps the handle **14** thereon to slide the same upwardly within the shell **10** from the closed position as shown in Fig. 1 to an open position (not shown) whereby access to the rotatable drum enclosed within the shell **10** is afforded.

Generally, in washing machine constructions of this kind, the shell door **12** is movable to and from its closed position as shown in Fig. 1 between inner and outer runner members **16** and **18** respectively (Fig. 5). The arrangement of the inner and outer runners **16** and **18** is such that they conform substantially to the curved contour of the shell doors **12** and extend for the full length of movement of the shell doors to sandwich the door therebetween and guide the same accurately during the movement of the same. In order that the movement of the shell door be accurately guided, the pair of cooperating inner and outer spaced runners **16** and **18** respectively, are positioned on the inner and outer sides of the shell door **12** and on opposite lateral sides thereof.

When more than one door **12** is employed in the washing machine shell **10** as shown in Fig. 1, a pair of runners **16** and **18** abridge the space between the adjacent shell doors **12** to provide the proper running and guiding movement for the doors. However, to one who is skilled in the art, it will be clear that the bridging inner and outer runners **16** and **18***a* as shown in Fig. 1, are substantially the same in construction and detail as the runners **16** and **18** to be described in greater detail.

As previously noted, the purpose of the inner and outer runners is generally to guide the movement of the shell door **12** to and from its closed position. Hence, it is the general arrangement of washing machine construction to extend the inner and outer runner members **16** and **18**, and **16***a* and **18***a* under the top structural plate **20** for a distance sufficient to guide the doors **12** to their open position. The spaced inner and outer runners **16** and **18** continue downwardly in conformance with the curvature of the shell door **12** to terminate in what is termed a gap **22**. The gap **22** extends laterally along the full width

of the edge of the door **12** to accommodate its forward or leading edge therein.

The arrangement shown in Fig. 5, wherein the ends of the inner and outer runners **16** and **18** terminate to form the gap **22**, is for illustrative purposes only. Various changes in this arrangement are of course experienced, but the basic construction generally remains the same. In the arrangement shown in Fig. 5, the outer runner or guide member **18** extends down to the gap **22** and abuts laterally extending cross plate **19** to form the face of the washing machine shell **10** and is secured to a sandwiched plate **24**, a backing plate **26** and a support plate **28**. The depth of the gap **22** and the seat afforded the leading edge of the shell door **12**, is generally sufficient to accommodate a reasonable length of the leading edge of the shell door seated therein. However, experience has shown that when the washing fluid in the machine shell **10** is severely agitated, and pumped by the rotation of the drum enclosed therein, the fluid finds its way out through the gap **22** underneath the shell door **12** over plate **19** and thence out through the front of the machine.

In order to prevent the beginning and continuance of this flow and consequent rivulets of fluid, there is mounted within the base of the gap **22** and along the top of the sandwiched plate **24**, a resilient sealing member **30**. Sealing member **30** provides a soft and yielding seat for the leading or forward edge of the shell door **12** when the same is closed and moved into seating position within the gap **22**. The resilience of the sealing member **30** is such as to yield when the forward or leading edge of the shell door **12** is seated thereagainst. This yielding causes the sealing member **30** to well up around the sides of the leading edge of the door **12** and to form a fluid-tight seal therewith all along the gap **22**.

The gap **22** is not the only source of difficulty in cutting off the rivulet flow of washing fluid that escapes from the interior of the washing machine shell **12**. There is also difficulty experienced along the sides of the door **12** by fluid being pumped around between the runner **16** and the door **12**, and thence out between the door **12** and the outer guide or runner **18**. It is true that the agitated pumped water must follow a somewhat tortuous path in its escape from between the runners **16** and **18** and the shell door **12** in its travel from the interior of the washing machine shell **10** to the outside thereof, but it is not difficult to understand this escape when it is recognized that as previously mentioned, the shell door **12** is quite loosely guided between the inner and outer guide runners **16** and **18** for smooth sliding movement. This loose guiding co-action or cooperation thus permits an easy escape for the washing water that is agitated and pumped as is the case of the fluid in the washing machine shell **10**.

To provide an effective seal along the sides of the doors in addition to that provided at its forward leading edge within the gap **22**, there is positioned along each opposite side of the shell door **12**, a resilient sealing band generally identified by the numeral **32**. The sealing band **32** is generally curved to conform to the contour of the outer runners **18** and **18***a* which, in turn, conform to the curvature of the shell door **12**.

The length of the band **32** depends upon the size of the machine **10**, its fluid capacity and the severity of the agitation of the fluid within the shell. That is, the agitated fluid will rise to a certain height within the shell **10** and against the inside of the door **12**. Accordingly it is necessary to seal the sides of the door to a height at least equal to and slightly greater than the height of the agitated fluid to prevent its escape from the shell **10**. Hence it is merely necessary to predetermine the height to which the fluid in the machine is agitated and this height accordingly predetermines the length of the band **32**.

The band structures **32** employed to seal the shell doors **12** from the escape of the agitated pump washing fluid in the interior of the washing machine shell **10**, include a substantially L-shaped resilient band member **33** as may be seen more clearly in Figs. 1, 3 and 5. The body **34** of the band member **33** extends laterally across a portion of the width of the runner **18** and although spaced therefrom, overlaps it along the surface **35**. The band structure **32** operates to move its band member **33** into engagement with the outer face of the door **12** with sufficient pressure as to move the door into tight surface engagement with the inner runner **16**. This produces a fluid tight cooperation and seal between the door and inner runner. Quite obviously, movement of the door into sealing engagement with the inner runner **16** may be accomplished by simply moving the band structure **32** against the door. However, for the sake of providing a larger door or access opening to the inner washing cylinder or drum in the shell **10**, the bands are made to operate in openings in the outer runners **18**, as will be described.

A leg **36** of the band member **33** projects inwardly toward the shell door **12** through a cutaway or opening **38** (Fig. 1) that is defined in the outer runner **18**. The opening **38** is of such lengthwise extent as to at least accommodate the full length of the band member **33** and is of such lateral extent as to accommodate the full length of the band member **33** and is of such lateral extent as to accommodate the full lateral width of the leg **36**.

Hence for all intents and purposes, the leg **36** of the resilient portion of the band **33** is accommodated within the opening **38** of the outer runner **18** and is permitted free movement therein into and out of engagement with the outer surface of the shell door **12**. The under sealing surface **40** of the leg **36** is movable into and out of of sealing engagement with the shell door **12**. In its normal position (not shown) wherein it is disengaged from the shell door **12**, the surface **40** is in substantial curved alignment with the inner guiding surface of the outer runner **18** (**18***a*), to form therewith a completed curved surface conforming to the shape of the shell door **12**, to accurately guide the shell door during its movement to and from its closed position.

Extending along the back surface of the resilient band member **33**, is a stiffener construction that includes a first stiffener member **42** positioned directly on the back of the band **33** and spaced by inserts **44** from a second stiffener member **46**. The second stiffener member **46** extends beyond the ends of the back of the band **33** and is connected at its upper end to a double hinge means generally identified by the numeral **48**.

The hinge means **48** comprises an arm **50** that is secured in some suitable fashion to the outer surface of the outer runner member **18** (**18***a*). A link **52** positioned intermediate the arm **50** and the stiffener member **46** of the band **32** is pivoted to both the arm and the band by spaced hinge constructions **54** (Fig. 5).

The double hinge arrangement **48** thus described permits outward movement of the complete sealing band structure **32** as a body away from the outer face of the door **12** in a motion that is initially tangential relative to the door yet in such manner that the longitudinal ends of the band structure move in parallelism. This movement of the band **32**, made clearer as the description proceeds, will obviate any possibility of the band surface **40** rubbing against the outer surface of the door **12** when the same is moved thereagainst and therefore will eliminate the possibility of wear between the surface **40** and the co-acting outer surface of the door **12**. The stiffener constructure **42**, **44** and **46**, mounted along the back of the resilient band member **33**, serves to retain the exact shape of the resilient member and to provide adequate support therefor during its actuation as set forth hereinafter.

The band structure **32** is secured to an actuator mecha-

nism at the other or lower end of the second stiffener member 46 at a pivot or hinge member 56. The pivot or hinge member 56 is, in turn, mounted in a pivoted lever 58 that is fixed to a laterally extending rock shaft 60. The rock shaft 60 extends the full lateral width of the shell door 12 and, in the case where there is a plurality of such shell doors, one adjacent the other, the shaft 60 extends completely across the width of the plurality of doors, as shown in Fig. 1. Each band structure 32 is thus positively connected by the pivot or hinge member 56 to the pivot lever 58 and thence to the rock shaft 60 for coincident movement in response to the rocking or rotation of the shaft 60. The shaft 60 is guided for rotation and retained in proper position relative to the washing machine shell 10 by strategically positioned brackets 62.

Rotation of the rock shaft 60 is accomplished by a positively acting hydraulic cylinder and link mechanism shown in Fig. 1 and, in greater detail, in Fig. 2. The actuating hydraulic mechanism comprises a double-acting cylinder 64 having fluid inlets and outlets 66 and 68 for positive application of pressure on a piston (not shown) movable within the cylinder. Pressure on the head of the piston in the cylinder 64 will cause the adapter rod 70 to move downwardly and outwardly from the cylinder.

Rod 70 is threadably secured to one end 72 of a universal joint having a cooperating end 74. Adjustment of the joint is accomplished by rotation of a clevis coupling 76 which is connected at its lower end by a yoke 78 to a pressure lever 80. Thep ressure lever is fixedly mounted on the end of the rock shaft 60 to rotate the same in response to the movement of the piston in the cylinder 64. Hence pressure applied to the piston in the cylinder 64 moving the same outwardly from the lower end of the cylinder, will cause the shaft 60 to rotate clockwise, in the direction of the arrow 82 shown in Fig. 5. This rotation to the shaft 60 is transmitted by way of the universal joint 72, 74, the clevis and yoke 76, 78, and the pressure lever 80.

In Fig. 2, it will be noted that when the piston moves out of the lower end of the cylinder 64, the arrangement of the aforementioned elements is such that the universal joint is caused to line up into a linear relationship and the application of forces at the pivot of the yoke 78 with the lever 80 is along a direct line; hence, the force applied to the pressure lever 80 is equal to that applied to the piston in the cylinder 64.

In the embodiment shown in Fig. 1, the rock shaft 60 is actuated at its opposite lateral ends by a mechanism such as has been previously described. It will be obvious that if desired, and if the construction of the machine 10 is sufficiently small in size, only one such actuator structure need be provided. However, for purposes of illustration, two actuator mechanisms are shown in Fig. 1, each operating simultaneously on opposite ends of the rock shaft 60.

Rotation of the rock shaft 60 is transmitted undiminished to the pivot levers 58 and thence to the pivots 56. The eccentric location of the pivot 56 on the lever 58 with respect to the axis of rotation of the rock shaft 60, applies a tangentially directed force to the lower end of the sealing band structure 32. This force causes the band structure 32 to move inwardly through the opening 38 in which it is accommodated and into contact with the outer face of the shell door 12.

The band structure 32 is moved in such manner, as permitted by the double hinged pivot 48 at its upper end, as to move bodily toward the door 12 with its opposite ends moving simultaneously in parallel relationship. Upon engagement of the contact surface 40 with the outer face of the shell door 12, the door is moved inwardly against the guiding surface of the inner runner 16 as shown in Fig. 3. However, continued rocking movement of the shaft 60 causes the pivot 56 to move eccentrically and tangentially toward the door 12. This movement is thence transmitted to the resilient band 33 of the band structure 32.

The action is such that the contact surface 40 engages the shell door 12 more tightly and distorts while structure 32 continues its movement, in a tangential direction substantially as shown by the distorted section lines of the band member 33 in Fig. 5. The distorted engagement of the band 32 with the door 12 positively moves the door downwardly into the gap 22 and into tighter seating and sealing engagement with the seal 30 and inner runner 16.

The above described operation is accomplished without rubbing or relative frictional movement between the band structure 32 and the surface of the shell door 12. Rather there occurs a distorting engagement that tends to move the shell door 12 into tight sealing engagement with the inner runner 16, thus preventing the possibility of washing fluid from moving outwardly between the shell door 12 and the inner runner 16. However, in addition to this seal between the door 12 and the runner 16, there is a further seal provided along the surface 40 and the door 12.

As previously described, where a plurality of doors 12 are mounted one adjacent the other, bridging runners 16 and 18*a* may be provided. In such case, a single double hinge structure 48*a* may be utilized for the operation of the sealing band structures 32 as shown in Fig. 1.

In the embodiment shown in Fig. 4, the operation is substantially the same as that previously described. It differs only in the structural details of the sealing band 132. In the embodiment 132, the body 134 is provided with an elongated opening extending the full length thereof. Positioned within this opening is a first stiffener means 142 that is spaced by the remaining portion of the body 134 from the outer stiffener 146. Otherwise the details and detailed operation of the embodiment 132 is exactly the same as that described with respect to the embodiment 32.

When it is desired to release the sealing band structure 32 before opening the door 12, the fluid pressure applied to the piston in cylinder 64 is reversed. The piston and its adaptor rod 70 are then positively moved upwardly in the cylinder 64. This motion is transmitted along the actuating structure that then pivots out of linear alignment at the joint 72, 74 to rotate the pressure lever 80 in a counter-clockwise direction.

The pivot levers 58 also are moved with the shaft to lift their eccentrically mounted pivots 56 tangentially away from the doors 12. In turn, each band structure 32 is lifted in a tangential direction relative to the door and upwardly in substantially parallel motion relative to the door to undistort the band member 33.

This upward movement of the band 32 is evidenced throughout its entire length facilitated by the additional double hinge connection 48 at its top. The band structure 32 moves away from the door 12 bodily in a positive manner simultaneously throughout its length in the same manner as it is actuated into door-sealing position. Its movement toward and away from the door resulting from its actuation by the actuator structure described, is represented somewhat like the lines of a parallelogram wherein the structure 32 moves bodily through the opening 38 in substantially parallel relationship toward the door with its ends moving in parallelism, and away from the door in the same manner.

While there have been shown and described and pointed out the fundamental novel features of the invention as applied to several preferred embodiments thereof, it will be understood that various omissions and substitutions and changes in the form and details of the devices illustrated and in their operations may be made by those skilled in the art, without departing from the spirit of the invention. It is the intention, therefore, to be limited only as indicated by the scope of the claims appended hereto.

What is claimed is:

1. In a washing machine having a shell door guided at its opposite sides for sliding movement between open and closed positions by pairs of inner and outer runners, said pairs of runners terminating in a gap extending the full width of the door, seal means in said gap to fluid tightly seal the leading edge of said door when the same is seated in said gap, the outer ones of said runners each having an opening, a band movable in each of said openings to contact and move said door into fluid tight sealing engagement with said inner runners, means to actuate said bands into and out of contact with said door, and double hinge means pivotally connecting one end of said band with said outer runner and the other end of said band being pivotally connected with said actuator means for substantially parallel movement bodily into said contact movement with and relative to said door.

2. In a washing machine having a shell door guided at its opposite sides for sliding movement between open and closed positions by inner and outer runners, openings in each of said outer runners exposing a longitudinally extending portion of said door when the same is closed, double hinge means on said outer runner, a longitudinally extending band in each opening and being pivotally connected at one end of its opposite ends with said hinge means for movement throughout its length into contact with said door to move the same into fluid sealing engagement with said inner runners, and actuator means pivotally connected with said band to actuate the same into contact with said door.

3. A washing machine having a door slidably movable to and from a closed position, pairs of inner and outer guide means on opposite sides of said door between which said door is guided, resilient sealing bands of predetermined lengths to move said door into sealing engagement with said inner guide means along said predetermined lengths, double hinge means connecting said bands with said outer guide means, said outer guide means each having an access opening in which said bands are operable to move said door into engagement with said inner guide means, and means pivotally connected with said band means to move the same throughout their lengths simultaneously and in parallelism relative to said door.

4. A sealing band for a washing machine as in claim 3, comprising a resilient member of predetermined length having a back, a contact surface, stiffener means extending along said back beyond the ends thereof, and said double hinge means on at least one of the ends of said stiffener means.

5. A sealing band as in claim 4, said stiffener means including a first stiffener member secured directly to the back of said resilient member for at least the length thereof, a second stiffener member spaced from and secured to said first stiffener member and extending beyond the ends thereof, and means spacing said first and second stiffener members.

6. A sealing band as in claim 4, said resilient member having an opening extending longitudinally therethrough for the length thereof, said stiffener means including a first stiffener member in said longitudinal opening, a second stiffener means mounted on the back of said resilient member and extending beyond the end thereof, and means to secure said first and second members to said resilient member.

7. In a washing machine, a door movable to and from a closed position, spaced inner and outer guide members between which said door is guided, said outer guide members each having an opening therein, double acting hinge means on said machine, a resilient sealing band pivotally connected at one end to said hinge means, an actuator to move said band, said band being pivoted to said actuator at its other end, and stepped means on said band movable by said actuator through said opening into contact with said door to move the same into sealing engagement with said inner guide member.

8. In a washing machine as in claim 7, said hinge means including an arm mounted on said outer member, a link intermediate said arm and band and pivoted to said arm and band.

9. In a washing machine as in claim 7, said actuator including a rock shaft, operable pressure means to rotate said rock shaft, joint means between said pressure means and shaft to rotate the latter in response to the operation of the former, and a pivoted lever secured to said shaft to rotate therewith and pivoted to said band to move the ends of said band simultaneously and parallel into contact with said door.

10. A washing machine comprising a plurality of laterally spaced doors movable to and from a closed position, guide means on opposite sides of each of said doors including inner and outer runners, a resilient sealing band of predetermined longitudinal extent on opposite sides of each of said doors to move the respective sides of said doors into yielding fluid tight engagement with said inner runners, double hinge means at one end of said bands, and actuator means including a rotatable shaft extending laterally along the machine and having fixed thereon a lever for pivotal engagement with the other end of each of said bands to move the pivots of the same in parallelism against said door.

11. In a washing machine as in claim 10, operable pressure means to rotate said shaft, joint means between said pressure means and shaft to rotate said shaft in response to the operation of said pressure means.

12. A washing machine as in claim 10, said doors being slidable between said runners, and seal means coacting with the leading edges of said doors and compressible into tighter sealing engagement therewith when said band is moved against said door.

13. A washing machine having a door movable between open and close positions, inner and outer guide means on opposite sides of said door between which said door is guided for movement between said open and close positions, resilient sealing members movable against said door to yieldingly move the same into sealing engagement with said inner guide means when said door is closed, said resilient members each having a contact surface for yielding movement against said door, stiffener means extending along the backs of each of said members and beyond the ends thereof, pivot means on each of the ends of said stiffener means including double acting hinge means connecting said stiffener means with said outer guide means at one of said ends, said outer guide means each having an access opening in which said bands are movable to move said door into said engagement with said inner guide means, and means pivotally connected by said pivot means with each of said members at their other ends to move the same simultaneously and in parallelism relative to said closed door at said pivot means.

References Cited in the file of this patent

UNITED STATES PATENTS

825,089	Thomas	July 3, 1906
1,657,181	Sando	Jan. 24, 1928
1,682,116	Couch	Aug. 28, 1928
1,917,820	Brackett	July 11, 1933
2,120,167	Waream	June 7, 1938
2,131,932	Blume	Oct. 4, 1938
2,282,019	Balousek	May 5, 1942
2,344,278	Balousek	Mar. 14, 1944
2,529,643	Vetovino	Nov. 14, 1950
2,857,074	Hutterer	Oct. 21, 1958