Dec. 15, 1953 M. F. DE BOY 2,663,011

CATHODE-RAY TUBE SUPPORT

Filed July 6, 1949

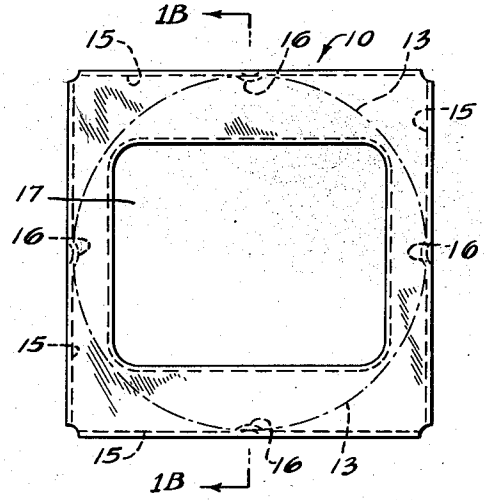

FIG. 1A

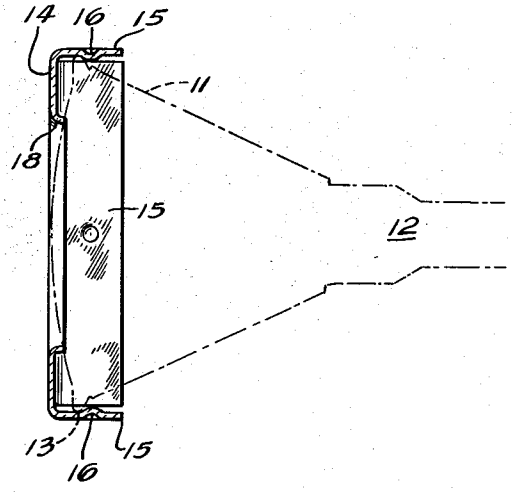

FIG. 1B

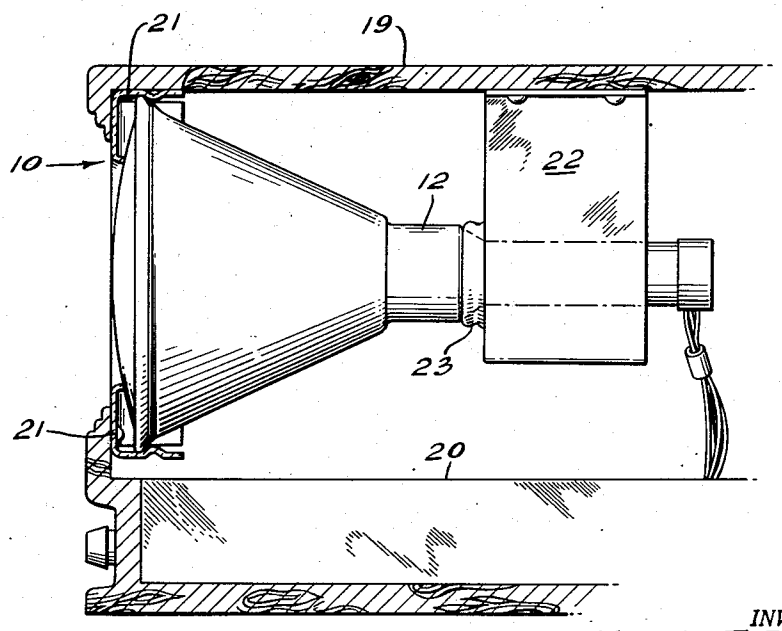

FIG. 2

INVENTOR.
Marvin F. DeBoy
BY
John A. Harvey
ATTORNEY

Patented Dec. 15, 1953

2,663,011

UNITED STATES PATENT OFFICE

2,663,011

CATHODE-RAY TUBE SUPPORT

Marvin F. De Boy, Buffalo, N. Y., assignor, by mesne assignments, to Sylvania Electric Products Inc., New York, N. Y., a corporation of Massachusetts

Application July 6, 1949, Serial No. 103,304

3 Claims. (Cl. 340—367)

1

The present invention relates to supports for cathode-ray tubes and, particularly, to a support for the flared end of a television picture tube. While the invention has utility in a wide range of applications, it is particularly useful to support and electrically insulate the flared end of a metal-envelope type of picture tube.

The flared end of a television picture tube has heretofore been conventionally supported either by a cradle for vertically mounted tubes or by a saddle and securing strap where the tube is mounted horizontally on the chassis of an associated apparatus. The supporting arrangements heretofore proposed have involved a more complex construction and higher cost than is desirable, and the majority are not suitable from the standpoint of providing adequate electrical insulation where the picture tube is of the metal-envelope type. Additionally, it is usually desirable to mask the unused edge portions lying outside of the active image-reproducing area of the picture tube, and the tube-supporting arrangements heretofore proposed have the disadvantage that a separate masking element is required for this purpose.

It is an object of the present invention, therefore, to provide a new and improved cathode-ray tube support which avoids one or more of the disadvantages and limitations of prior arrangements heretofore proposed.

It is an additional object of the invention to provide a unitary structure for supporting the flared end of a cathode-ray tube and one which is of simple and inexpensive construction.

It is a further object of the invention to provide a novel support for the flared end of a cathode-ray tube and one which inherently provides adequate insulation for a television picture tube of the metal-envelope type.

It is yet another object of the invention to provide a resilient, or shock-resistant, support for the flared end of a television picture tube, one which minimizes the size of the cabinet required to house the picture tube and its associated apparatus, and one which when formed of opaque material may be arranged to provide a decorative mask to mask from view the unused edge portions of the picture-tube image-reproducing screen.

In accordance with a particular form of the present invention, a support for the flared end of a cathode-ray tube comprises a unitary open-box-like cap structure of only slightly resilient electrical-insulating sheet material for insertion over the face of said tube as a cap and having

2

sides which extend over and engage the rim of the flared end to support this end of the tube while restraining it against substantial lateral movement. The cap structure may be of rectangular cross-sectional configuration so that it contacts the edges of the tube at points spaced 90° apart, and the sides may have inwardly projecting dimples adjacent the points of contact of the structure with the rim of the tube for the purpose of locking the cap in place over the flared end of the tube. The support structure may also be of opaque material and may be provided with an aperture of suitable configuration to mask or frame the image-reproducing area of the tube screen.

For a better understanding of the invention together with other and further objects thereof, reference is had to the following description taken in connection with the accompanying drawing, and its scope will be pointed out in the appended claims.

Referring now to the drawing, Figures 1A and 1B respectively illustrate a front and cross-sectional side view of a cathode-ray tube support embodying the present invention; and Figure 2 illustrates the manner in which the support structure may be secured to the interior of a housing which encloses the cathode-ray tube and associated apparatus.

Referring now more particularly to Figs. 1A and 1B of the drawing, there is illustrated a support 10 for the flared end 11 of a cathode-ray tube 12, which may be either a metal-envelope type or all-glass envelope type of television image-reproducing tube. The support 10 comprises a unitary open-box-like cap or hood structure which preferably has a rectangular cross-sectional configuration so that contact with the rim 13 of the tube 12 occurs only at points spaced 90° apart. The support 10 is formed of only slightly resilient electrically insulating sheet material and has a substantially planar face portion 14 and folded-back side portions 15 which extend over and engage the rim 13 of the tube 12 to support the flared end 11 of the tube while restraining it against substantial lateral movement. An inwardly projecting detent or dimple 16 is preferably pressed or otherwise suitably formed centrally of each of the sides 15 adjacent their points of contact with the rim of the tube 12, it being the purpose of these dimples to retain the structure 10 and flared end 11 of the tube in nested relation. While the sides 15 may extend in continuous manner from one into the other, they are preferably broken or slotted at the corners as indicated so that they may give

more readily under the action of the dimple or detent 16 during insertion of the structure 10 over the flared end 11 of the tube and in order that they provide a somewhat more resilient or shock-resistant support for the flared end of the tube. The support structure 10 may conveniently be formed by pressing or molding a material such as polyethylene, polystyrene, or relatively hard vulcanized rubber into the desired configuration.

The material of the support structure 10 may be transparent, in which event the face portion 14 of the structure may extend in unbroken manner across the face of the picture tube 12 to shield the face of the tube from mechanical injury. For television applications, however, it will usually be preferable to use an opaque material for the support structure and provide in the face portion 14 of the structure a centrally positioned rectangular aperture 17 through which an image reproduced by the tube is viewed. The aperture may have curved edges 18 if desired to enhance the decorative appearance of the structure. As thus arranged, the support structure 10 frames the image-reproducing area of the picture tube 12 and masks off from view the unused edge portions of the image-reproducing screen of the tube. It will also be apparent that the face portion 14 of the support structure engages the face of the tube 12 to provide longitudinal positioning of the tube.

When the support structure 10 is used to support a metal-envelope type of television image-reproducing tube, the depth of its sides 15 is so chosen that they project substantially beyond their points of contact with the periphery 13 of the tube 12. They are then effective substantially to reduce corona and to minimize electrical leakage of high-voltage current which tends to flow from the metal-envelope of the tube through paths extending over the surfaces of the sides 15 to any electrically conductive surface engaging the support structure 10. Since a metal-envelope type of picture tube normally operates with the metal-envelope at a potential of approximately 15,000 volts above ground potential, it will be apparent that a support structure embodying the present invention adequately insulates the tube from nearby wood (which may absorb moisture to become conductive at this high voltage) or metal surfaces and may be arranged to provide in a simple and inexpensive manner long leakage paths from the metal-envelope to any partially or fully conductive adjacent surfaces. The support of the picture tube 12 at 90° spaced points substantially reduces the undesirable flow of static electric charge currents around the periphery of the glass face portion of the picture tube.

Figure 2 illustrates the manner in which the support structure 10 may be arranged within a housing 19 which encloses the tube 12 and associated apparatus 20 which, for example, may comprise a television chassis. The support structure 10 may conveniently be fastened to the cabinet 19 by means of fiber or plastic screws 21 or may be similarly fastened if desired to the chassis 20. While the cabinet or housing 19 ordinarily will be constructed of wood which is considered an insulating material, moisture absorbed by the cabinet material or deposited on the cabinet surfaces renders the cabinet at least partially conductive at the very high voltages required for the operation of a metal-envelope television image-reproducing tube. The support structure of the present invention nevertheless may be easily and readily arranged by proper selection of the depth of the sides to provide adequate electrical insulation for the picture tube, and this is true even though the support structure is mounted directly upon the metal chassis 20. The rear end of the picture tube 12 is supported by a bracket 22 fastened to the top of the cabinet or housing 19, the bracket 22 normally supporting and enclosing the scanning and focusing windings conventionally positioned along the neck of the picture tube. A ring or collar 23 of resilient rubber may provide the actual support of the picture tube 12 from the bracket 22, thus completing a resilient or shock-resistant support of the tube 12 within the housing 19.

It will be apparent from the foregoing description of the invention that a support structure embodying the invention uniquely combines in one structure a resilient mechanical support, a decorative image mask, and an insulator for a television image-reproducing tube. This structure is of simple and inexpensive construction adapted to mass production by a simple forming or molding process. Since a minimum leakage path of one inch is required adequately to insulate the metal envelope of a metal-envelope type of image-reproducing tube, the depth of the sides of the support structure may be readily selected to provide the insulation required so that the cabinet sides and chassis can abut directly against the sides of the support structure thus minimizing the cross sectional size of the enclosing cabinet and effecting a substantial reduction of its cost.

While there has been described what is at present considered to be the preferred embodiment of this invention, it will be obvious to those skilled in the art that various changes and modifications may be made therein without departing from the invention, and it is, therefore, aimed in the appended claims to cover all such changes and modifications as fall within the true spirit and scope of the invention.

What is claimed is:

1. A support for the flared end of a cathode-ray tube comprising, a unitary relatively rigid open-box-like cap structure of rectangular configuration and of only slightly resilient electrical insulating sheet material for insertion over the face of said tube as a cap and having a portion for engaging said face to provide longitudinal positioning of said tube and side portions which extend over and engage the rim of said flared end to support said end of said tube while restraining it against substantial lateral movement, a tube supporting member and means for affixing said cap structure to said member, and means secured to said member for supporting the rear end of said tube and for cooperating with said cap structure to position said tube.

2. A support for the flared end of a cathode-ray tube comprising a unitary relatively rigid open-box-like cap structure of rectangular configuration and of only slightly resilient electrical-insulating sheet material for insertion over the face of said tube as a cap and having a substantially planar face portion for engaging said face of said tube to provide longitudinal positioning of said tube and folded-back side portions which extend over and engage the rim of said flared end of said tube to support said end of said tube while restraining it against substantial lateral movement, said sides being provided with inwardly projecting dimples positioned adjacent individual points of contact of said tube with said structure

to retain said cap structure in position over the flared end of said tube.

3. An insulating support for the flared end of a metal-envelope television picture tube comprising a unitary relatively rigid open-box-like hood structure of rectangular configuration and of only slightly resilient opaque electrical-insulating sheet material for insertion over the face of said tube as a hood and having a first substantially planar face portion positioned in opposing relation to said face and apertured to expose and frame an image-reproducing area of said tube and folded-back side portions which extend over and engage the rim of said flared end thereof at points spaced 90° apart to support said end of said tube while restraining it against substantial lateral movement, said sides having inwardly projecting dimples adjacent the points of engagement thereof with said tube to retain said hood structure on said tube and having such depth as to project substantially beyond said points of contact substantially to reduce corona and electrical leakage currents tending to flow through paths extending from said envelope over the surface of the sides of said hood structure to any electrically conductive surface engaging said hood structure.

MARVIN F. DE BOY.

References Cited in the file of this patent

UNITED STATES PATENTS

Number	Name	Date
2,165,779	Blain	July 11, 1939
2,224,287	Busch	Dec. 10, 1940
2,293,529	Bedford	Aug. 18, 1942
2,354,661	Berejkoff	Aug. 1, 1944
2,388,203	Zindel	Oct. 30, 1945
2,428,928	Cain	Oct. 14, 1947
2,440,260	Gall	Apr. 27, 1948
2,458,368	Kamin et al.	Jan. 4, 1949
2,484,345	Hinz	Oct. 11, 1949
2,497,660	Devine	Feb. 14, 1950
2,503,813	Fisch	Apr. 11, 1950
2,505,736	Herscher et al.	Apr. 25, 1950
2,508,001	Swedlund	May 16, 1950

FOREIGN PATENTS

Number	Country	Date
520,412	Great Britain	Apr. 23, 1940
600,096	Great Britain	Mar. 31, 1948