United States Defensive Publication [19] (H) [11] T958,003

Russel et al. [43] **May 3, 1977**

[54] **STAPLE SENSING APPARATUS**

[76] Inventors: **Matthew Jouette Russel; John Frederick Hartman,** both of 343 State St., Rochester, N.Y. 14650

[21] Appl. No.: **671,841**

[22] Filed: **Mar. 30, 1976**

[51] **Int. Cl.**[2] **B27F 7/08**

[52] **U.S. Cl.** **227/1**; 227/2

[57] **ABSTRACT**

In a finisher for finishing sets of copy sheets by stapling the sets into stapled booklets, staple sensing apparatus for sensing whether or not a staple has been properly driven, through the set of sheets. If a staple has been properly driven the legs of the staple effect an electrical continuity between staple clinchers. The electrical continuity is sensed and a first signal is produced indicative of a proper staple to permit continued operation of the finisher and electrographic apparatus to which it is attached. If an electrical discontinuity is sensed, a second signal is produced indicative of an improper staple and a display is actuated to indicate this condition to the operator.

No Claims, 5 Sheets Drawing,

18 Pages Specification

The file of this unexamined application may be inspected and copies thereof may be purchased (849 O.G. 1221, Apr. 9, 1968).

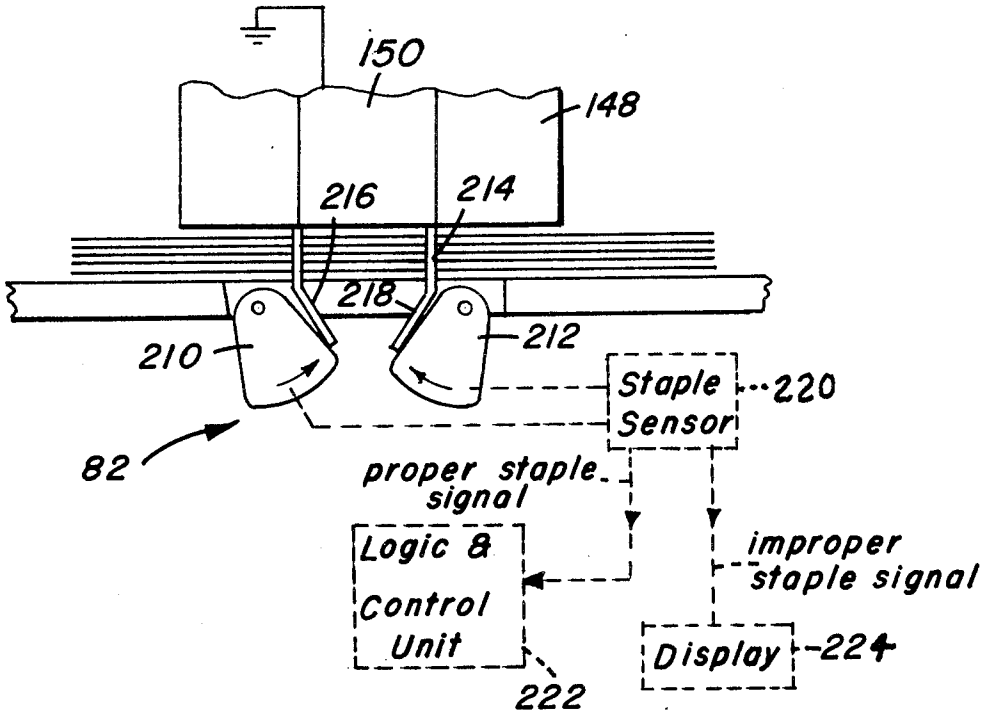

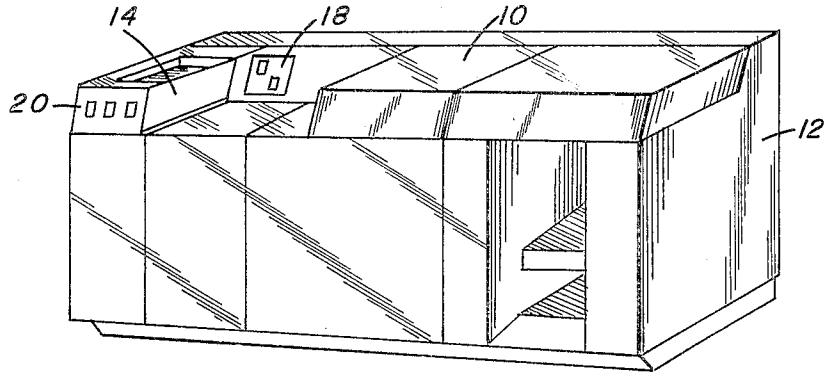
14
18
10
20
12

FIG. 1

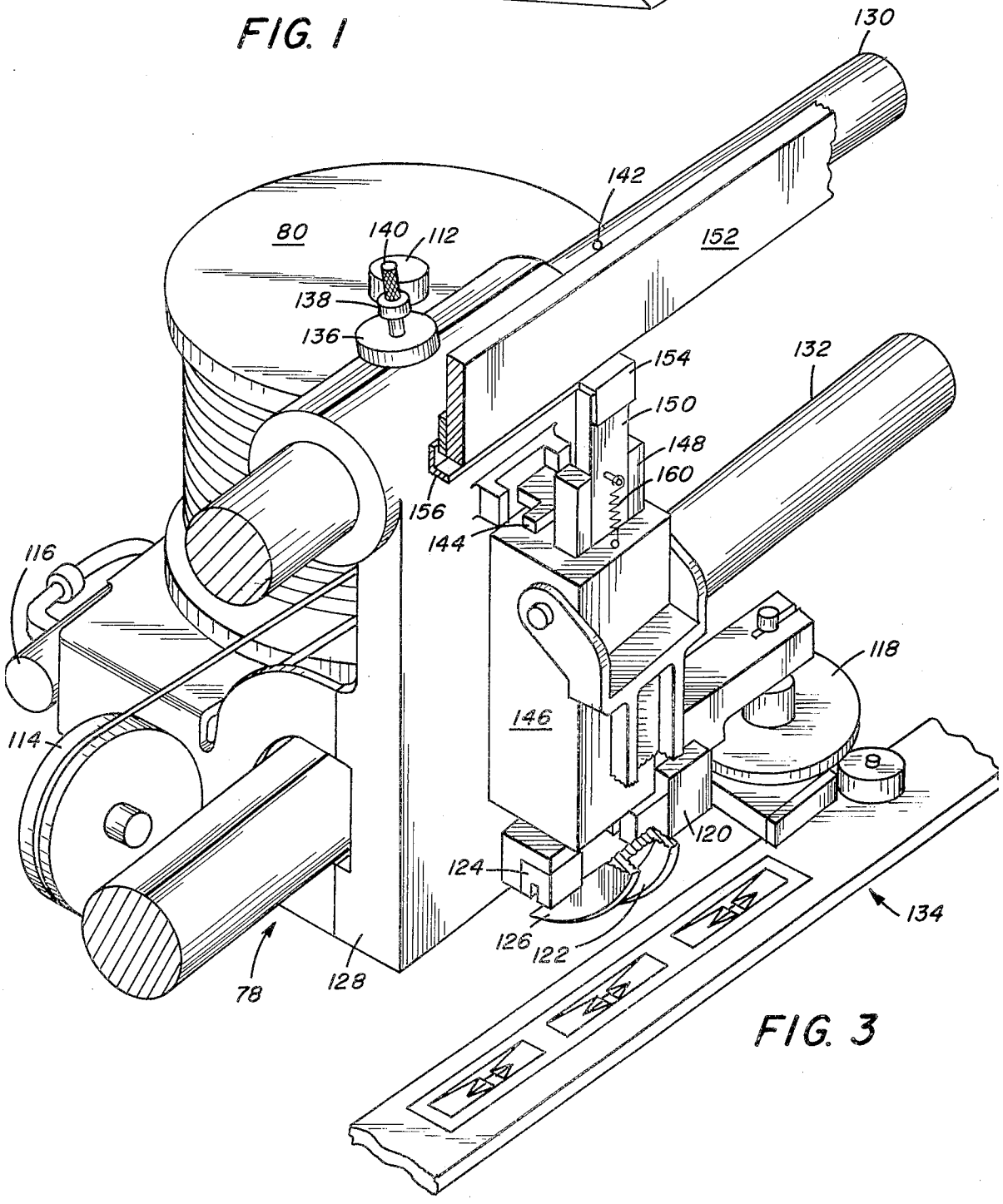
130
142
80
140
112
152
138
136
154
132
150
148
160
156
144
116
118
146
114
8
120
124
134
126
122
78
128

FIG. 3

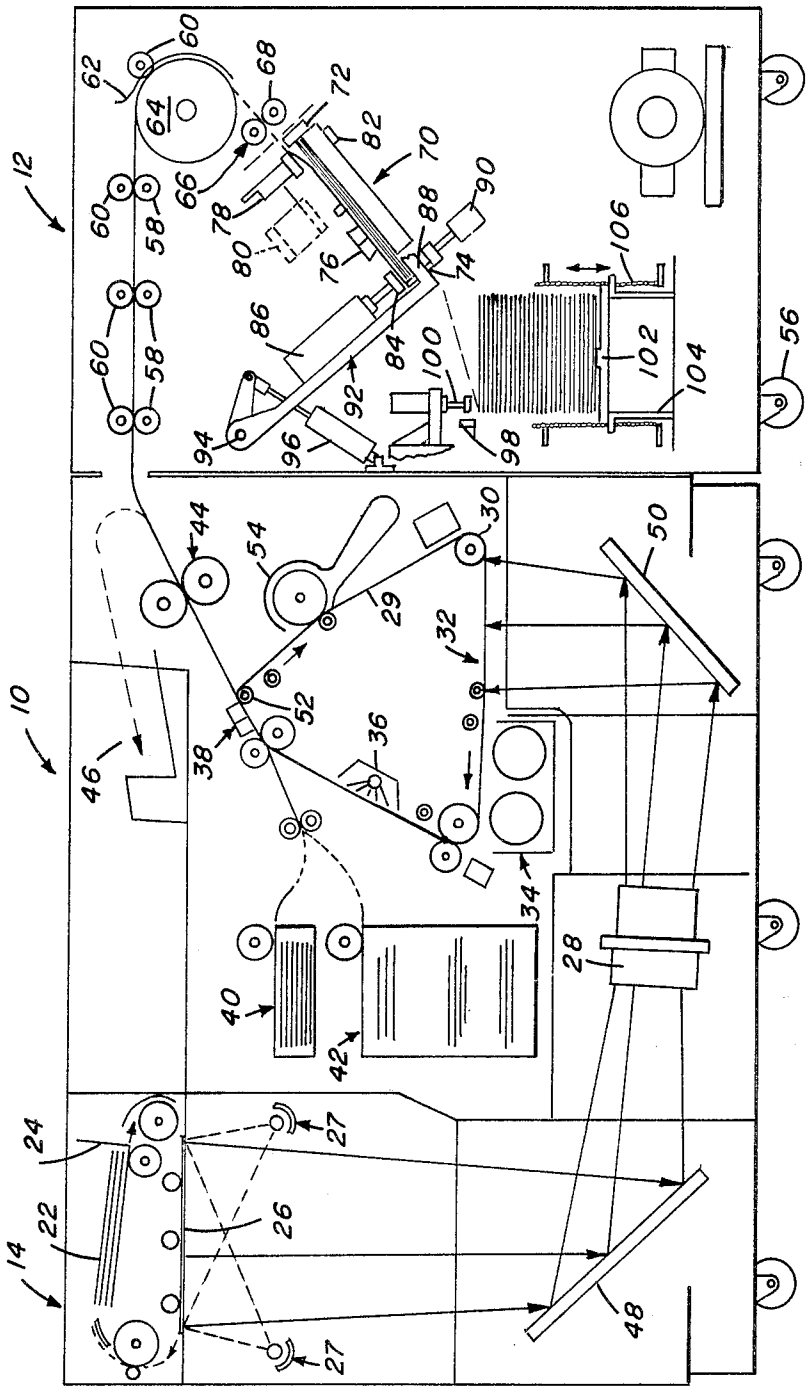
10
12
14
22
24
26
27
28
29
30
32
34
36
38
40
42
44
46
48
50
52
54
56
58
60
62
64
66
68
70
72
74
76
78
80
82
84
86
88
90
92
94
96
98
100
102
104
106

FIG. 2

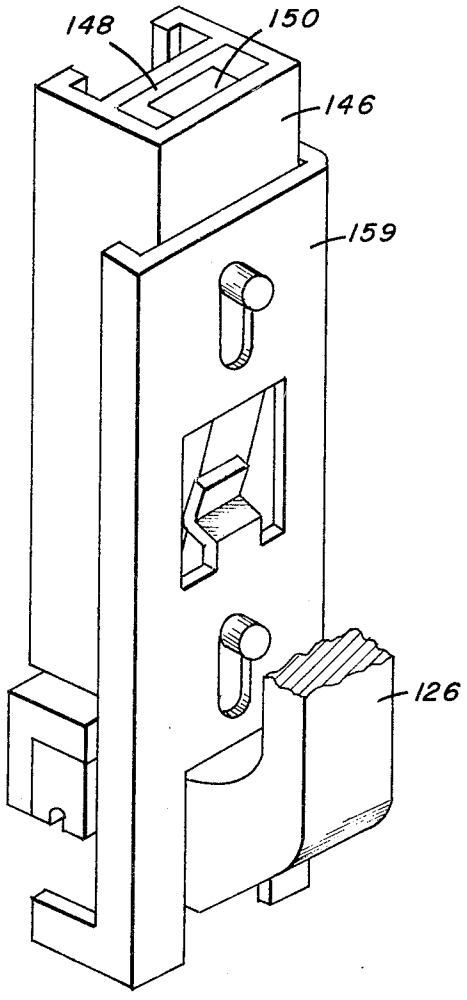

FIG. 4

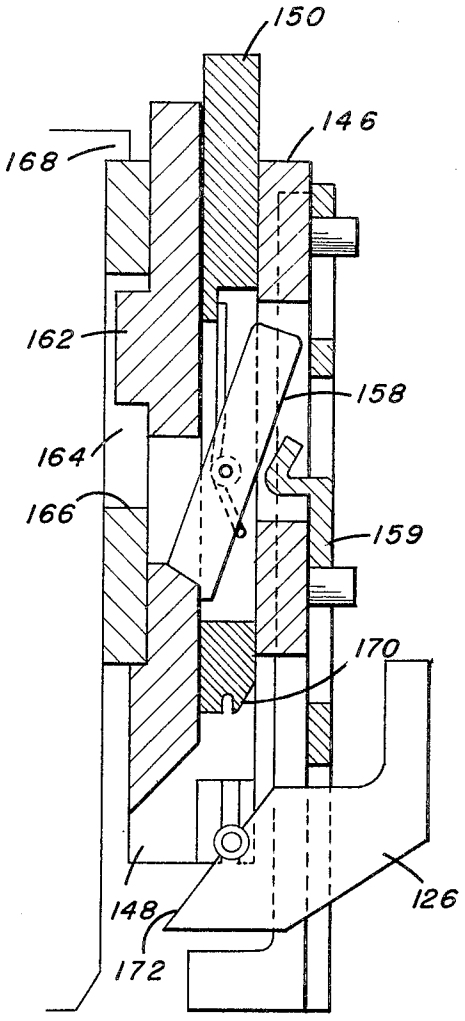

FIG. 5

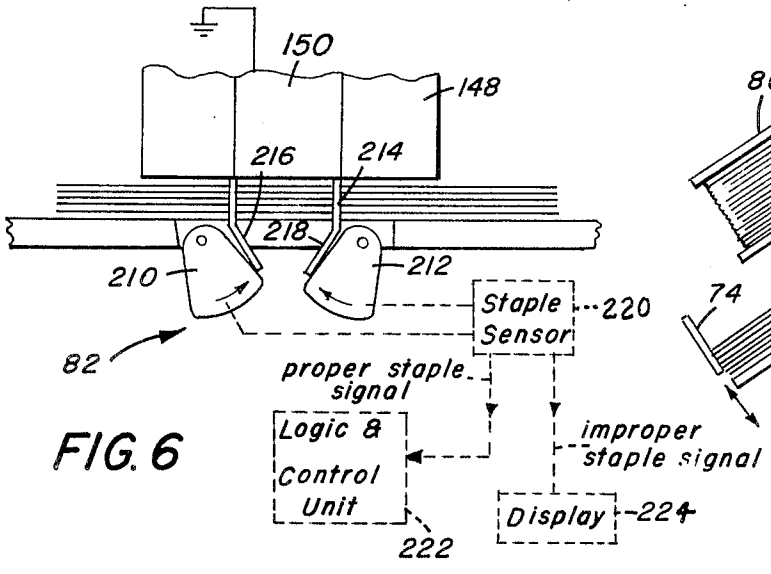

FIG. 6

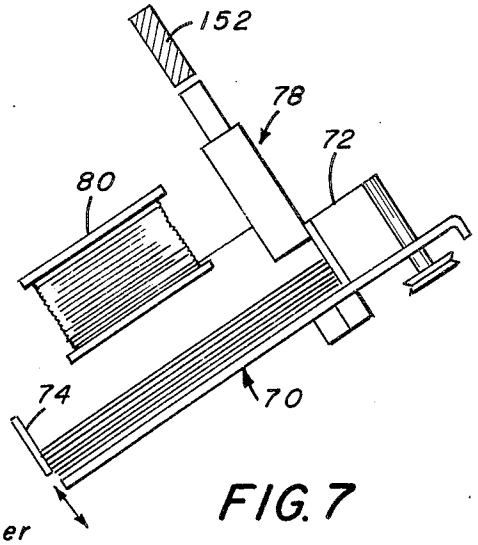

FIG. 7

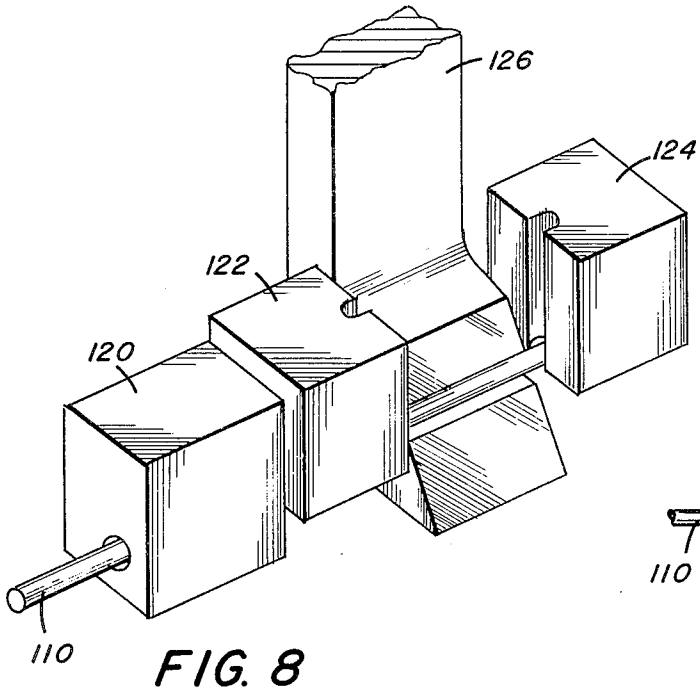

FIG. 8

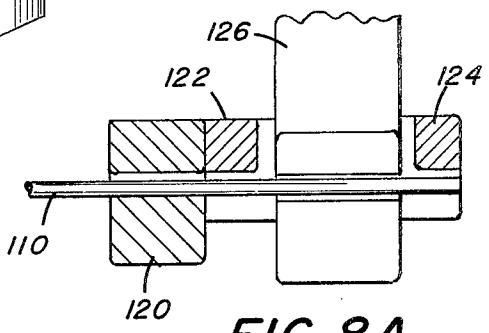

FIG. 8A

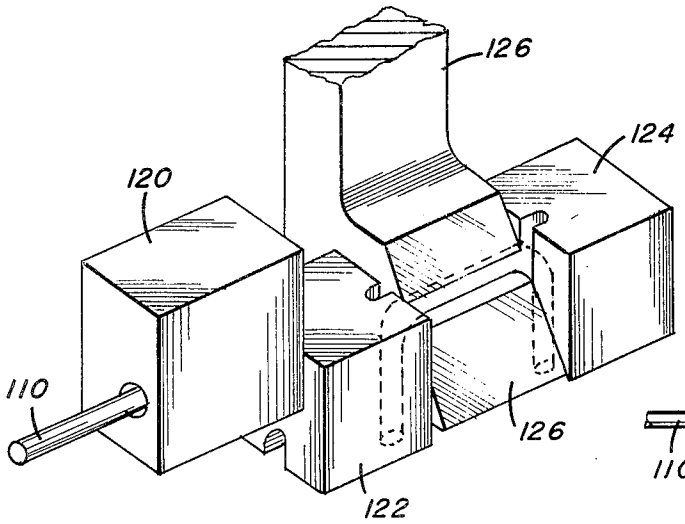

FIG. 9

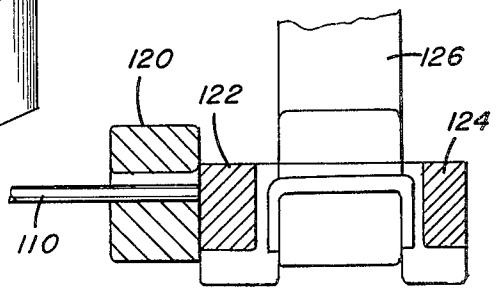

FIG. 9A

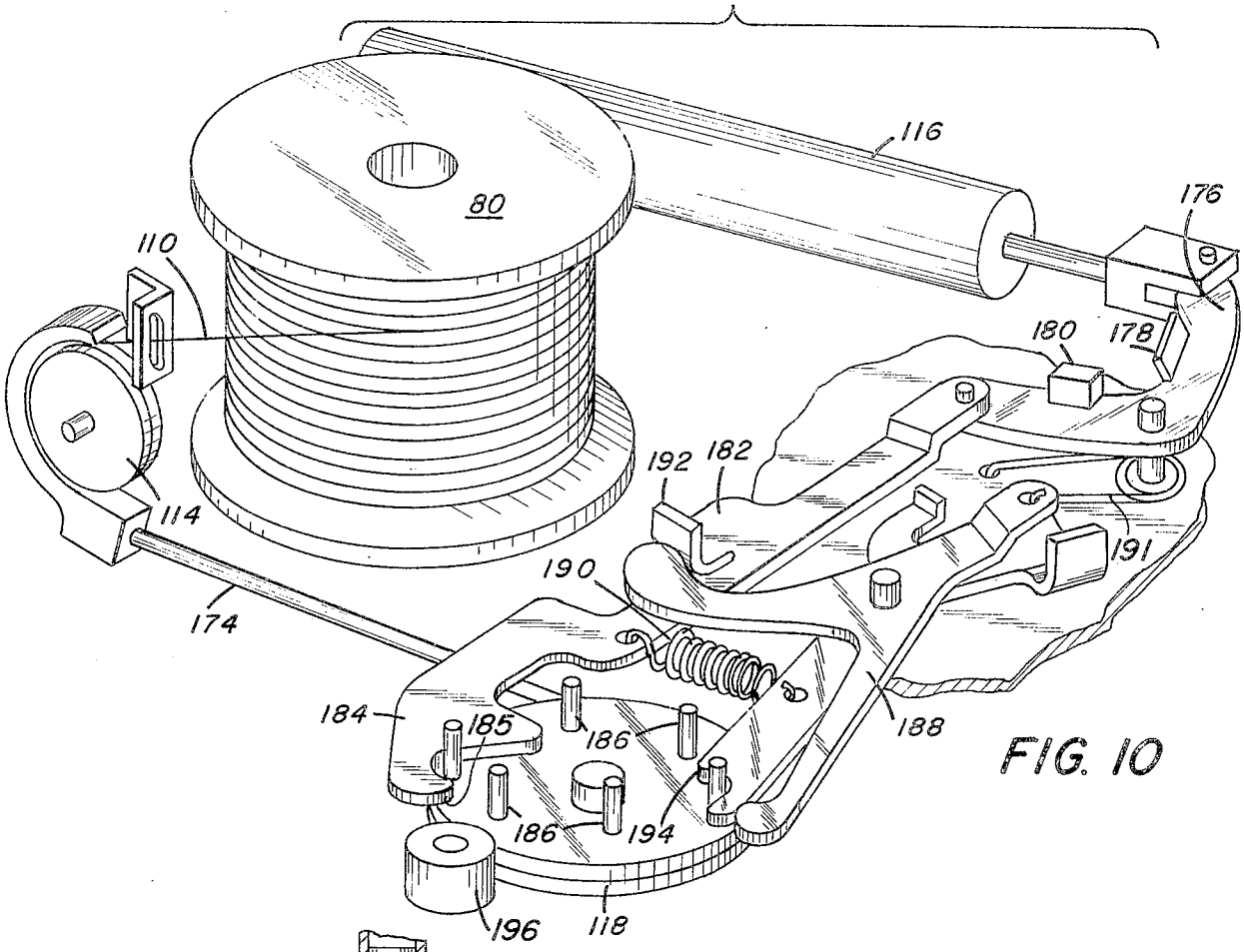

FIG. 10

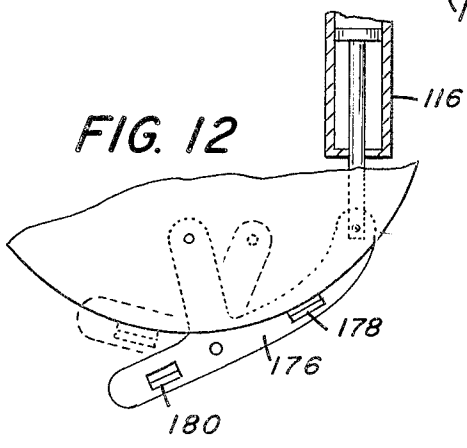

FIG. 12

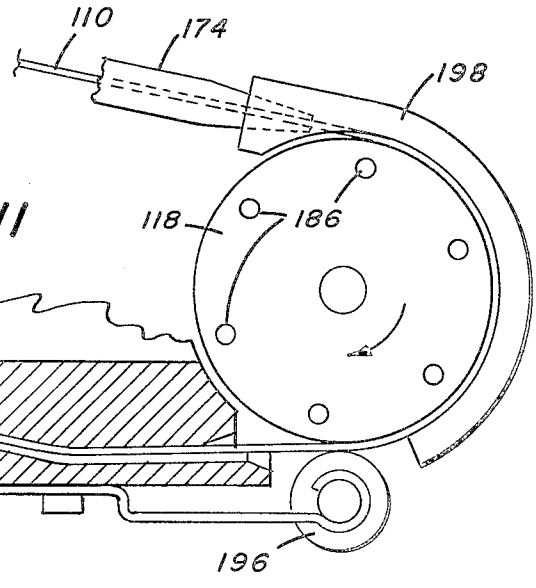

FIG. 11