Nov. 16, 1954 F. ROBBINS ET AL 2,694,463

ACOUSTIC SYSTEM FOR LOUD-SPEAKERS

Filed April 7, 1952

FIG. 2.

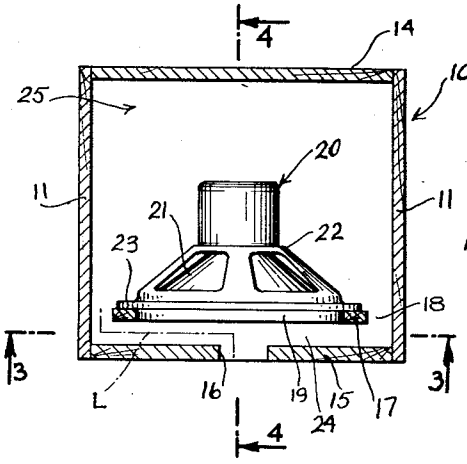

FIG. 1.

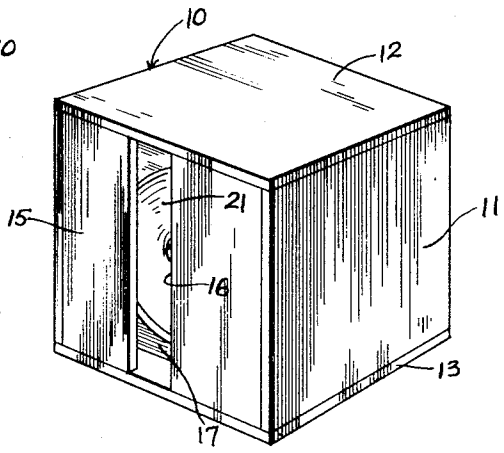

FIG. 3.

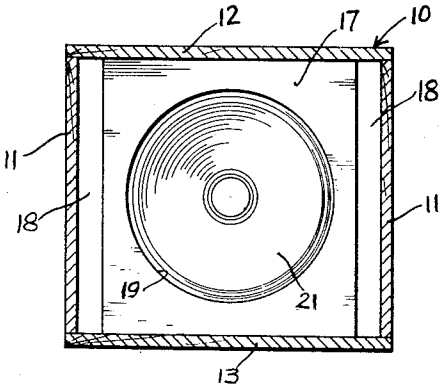

FIG. 4.

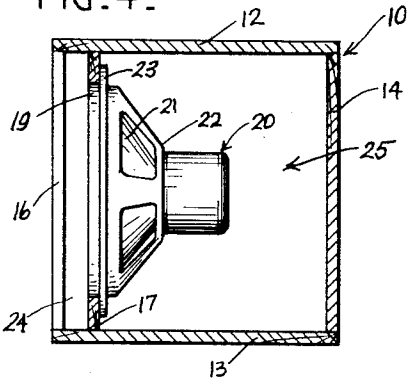

FIG. 5.

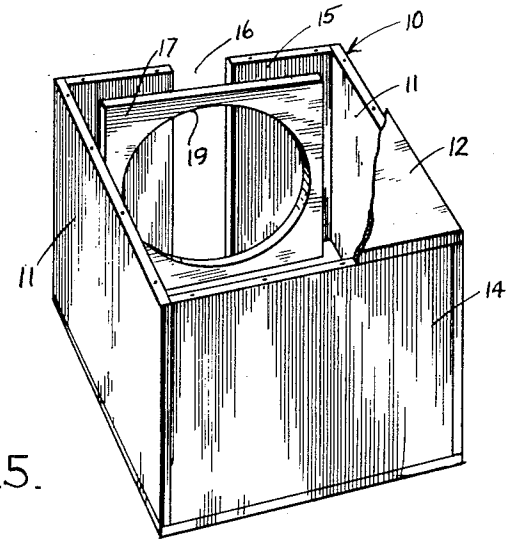

FIG. 6.

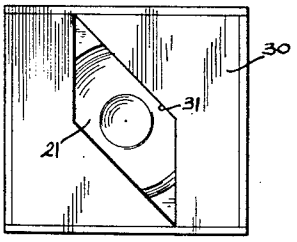

INVENTORS
FRANK ROBBINS
WILLIAM JOSEPH

BY Mock & Blum

ATTORNEYS

United States Patent Office

2,694,463

Patented Nov. 16, 1954

2,694,463

ACOUSTIC SYSTEM FOR LOUD-SPEAKERS

Frank Robbins, New York, and William Joseph, Brooklyn, N. Y.

Application April 7, 1952, Serial No. 280,974

9 Claims. (Cl. 181—31)

This invention relates to sound-reproducing apparatus and more particularly to acoustical enclosures for loud-speaker systems.

This application is a continuation-in-part of our co-pending U. S. patent application Serial Number 247,267, filed September 19, 1951, in which we disclose an enclosure for loud-speakers constructed in accordance with the Helmholtz theory of resonance. The enclosure therein had a completely enclosed chamber having a single aperture and an external port communicating with said aperture and opening into the atmosphere. The speaker was mounted entirely within said chamber and facing said aperture. The volume of the chamber and port, and the area of the aperture were proportioned relative to one another in accordance with the Helmholtz theory in order to impart a selected low resonance to the enclosure.

The enclosure of our said co-pending application was especially adaptable to the reception of a low-frequency speaker or "woofer," a high-frequency speaker or "tweeter" being also included, but located outside the enclosure itself. The enclosure had the particular advantage of being small and compact in size so that it could be built or mounted in a normal console-type television or radio set, unlike normal speaker baffles or enclosures which must be made of an extremely large size to reproduce the bass register of sound or music.

The speaker enclosure of the present invention is constructed generally along the same principle as the aforementioned enclosure and has the same general advantages, namely small size and compactness, and maximum fidelity throughout the audible frequency range and especially at the low audible frequencies or bass register. The speaker enclosure is so constructed as to impart it with a selected natural resonant frequency in the low audible frequency range, which frequency will remain substantially constant regardless of the type or size of speaker mounted within the enclosure.

In addition, the speaker enclosure of the present invention is particularly adapted to house a single speaker of the "co-ax" type which produces both high and low frequencies, the construction being such that the back waves of the speaker are also utilized which promotes the efficiency of the enclosure by increasing the volume of sound emitted. Further, the high frequencies emitted by the speaker are permitted to travel in a straight path out of the enclosure, without travelling through an angular path as in our aforementioned prior application, thus producing more faithful sound reproduction, especially in the middle highs.

Additional objects and advantages of our invention will be apparent in the course of the following specification when taken in connection with the accompanying drawings, in which:

Fig. 1 is a front perspective view of a speaker enclosure made according to the present invention;

Fig. 2 is a central horizontal section through said enclosure, with the contained speaker shown in full view for convenience;

Fig. 3 is a section taken along line 3—3 of Fig. 2;

Fig. 4 is a section taken along line 4—4 of Fig. 2;

Fig. 5 is a rear perspective view of the enclosure with the top thereof broken away to reveal its inner construction, and the speaker removed; and

Fig. 6 is a front elevational view on a reduced scale of a similar speaker enclosure which has a modified form of front wall and central opening therein.

In its broad aspect, the invention comprises the mounting of a loudspeaker within an enclosed compartment having a duct communicating with an aperture at the front of the compartment, the dimensions of said duct and compartment being generally determined by the formulae developed in the construction of the Helmholtz resonators. In contrast with our co-pending application, Serial No. 247,267, the speaker herein is so mounted that both the front and back waves thereof are permitted to travel out of the compartment through the front aperture thereof.

The classical type of Helmholtz resonator comprises an enclosed spherical cavity which has an orifice in the wall thereof communicating with a cylindrical duct which is open at both ends. This resonator was generally provided with a protuberance in the wall thereof opposite the duct, which protuberance was sized to fit within the ear. When in this position, the air in the resonator would vibrate when an external sound, having the same frequency as the natural resonant frequency of the resonator, was directed toward the open end of the duct. The resonator was therefore used in the acoustic analysis of complex sounds, especially musical sounds.

It was early discovered that by varying the ratio of the internal volume of the Helmholtz resonator cavity to the internal volume of the duct, the natural resonant frequency of the resonator would vary to such an extent that any selected resonant frequency within the audible range could be produced. The formula developed for controlling the resonant frequency of such a Helmholtz resonator is as follows:

$$f=\frac{C}{2\pi}\sqrt{\frac{A}{LV}}$$

where

C=velocity of sound

A=cross-sectional area of the duct

V=volume of the cavity

L=length of duct

f=natural resonant frequency of the resonator

The Helmholtz resonator and the formulae applying thereto are amply discussed in the literature on acoustics.

As was previously mentioned, the Helmholtz resonators have heretofore been used only in conjunction with measurement of external sounds. We have discovered that by mounting a loud speaker within a closed compartment a duct may be added thereto and the entire arrangement may be constructed in accordance with the Helmholtz resonator principle to selectively provide any desired resonant frequency to the system.

One of the long-standing problems in accoustical engineering has been to produce low fundamental cabinet resonance and low basic cone resonance for smooth reproduction down to the lowest audible frequencies. These low resonances are required to raise the volume of the response in the low frequency range since, as is well known the response curve tends to drop sharply in this range. A further problem has been the elimination of resonant peaks throughout the frequency range in the vicinity of 100 cycles, and below since distortion is generally emphasized in this range. Heretofore, it has required very large speaker enclosures or enormous baffles to overcome this difficulty. In an attempt to reduce the size of the enclosure, intricate systems of labyrinthed passages have been devised, but the total size of the system has remained too large for wide-spread popular use. Eight to ten cubic foot enclosures are quite common, and many larger ones are commercially marketed for bass speakers having cone resonances of sixty cycles or less. Such enclosures have sides of large area which in themselves tend to vibrate to produce false resonances unless properly braced or fortified to prevent such vibration. The art reveals numerous arrangements for reducing undesirable resonances in the speaker cabinet by the use of thick oak walls, brick, concrete, sand-filled panels, and the like.

By contrast, we are able to achieve the same ends in a very simple and economical manner by the use of relatively diminutive speaker enclosures. The small proportions of the enclosure in itself eliminates many of the aforementioned problems, as will be later set forth.

The drawings illustrate a speaker enclosure or cabinet, designated generally by the reference numeral **10**, in the form of a substantially square hollow box. The cabinet **10** has side walls **11**, top and bottom walls **12** and **13**, and a rear wall **14**, all rigidly secured to each other to completely close the cabinet **10**, except at its front. The front wall **15** of said cabinet is divided by a central rectangular aperture **16** which extends from the top edge to the bottom edge thereof.

The cabinet **10** also has an internal partition **17** which is parallel to and spaced a short distance behind the front wall **15**. The partition **17** is of the same height as the interior of the cabinet **10**, its upper edge being secured flush against the top wall **12** and its bottom edge being secured flush against the bottom wall **13**. The partition **17** is, however, of appreciably lesser width than the internal width of the cabinet **10**, its side edges being spaced from the side walls **11** to provide a pair of elongated, rectangular openings **18** on either side thereof.

Behind the partition **17** is a hollow cavity **25**, completely enclosed by the walls of cabinet **10** and by the partition **17** and its attached speaker, except for the slots **18**, through which the cavity **25** communicates with the front aperture **16**.

The partition **17** has a central circular opening **19** which is centered behind the aperture **16**. A loud-speaker **20** of the usual type is secured to the partition **17**, said loud-speaker having the usual speaker cone **21**, frame **22**, and mounting ring **23**. The mounting ring **23** is tightly clamped against the rear surface of partition **17** by bolts, screws, or similar means, with the center of the speaker cone **21** in registry with the center of opening **19**. The opening **19** is substantially of the same diameter as the open end of speaker cone **21**.

In the operation of the loud-speaker **20**, vibration of the speaker cone **21** creates sound waves which travel forwardly from the front surface of said speaker cone and rearwardly from the back surface of said speaker cone. The front waves travel directly through the opening **19** and aperture **16** exteriorly of the cabinet **10**. The back waves travel into the cavity **25** and thence through the openings **18** and out through the front aperture **16**.

The front surface of partition **17**, being spaced from the walls of the housing form a pair of opposed ducts **18**, through which the back waves travel on the way to front aperture **16**.

The construction of the cabinet **10** produces in a general way a counterpart of a Helmholtz resonator. The cabinet **10** thus has a closed hollow chamber or compartment with a volume V, communicating with ducts **18** of lengths L and having a restricted area A, the ducts **18** opening into the front aperture **16**. The areas of the two individual ducts **18** may be regarded as a single entity and added together to produce a single combined area.

Since according to the Helmholtz resonator formula, the resonant frequency of the resonator cavity depends not upon its size but upon the ratio between the internal volume of the resonator cavity and the internal volume or mass of air within the duct, the cavity, however small, may be imparted with any selected resonant frequency provided that the duct is dimensioned accordingly. Thus, according to the formula, it can be seen that the smaller the area of the duct, the longer the length of the duct, and the greater the volume of the cavity, the lower the air resonance which can be achieved.

In our aforementioned co-pending application, Serial No. 247,267, we disclosed a modified Helmholtz formula including end corrections at both ends of the duct which compensated for masses of air extending from both ends of said duct which swing back and forth when the speaker cone vibrates. In the enclosure of the present invention the effect of this factor is negligible, although for strict accuracy, the aforesaid modified formula may be employed.

In the construction of the cabinet **10**, therefore, the following Helmholtz formula may be applied:

$$f=\frac{C}{2\pi}\sqrt{\frac{A}{LV}}$$

where

f is the desired cabinet resonance
C is the velocity of sound
L is the length of the ducts **18**

A is the combined cross-sectional areas of the ducts, and V is the interal volume of the cavity **25**.

By way of specific example, in the arrangement shown in the drawings, the speaker **20** may have a diameter of fifteen inches. The cabinet **10** then has overall outer dimension of 18½ inches in height, 18 inches in depth, and 20½ inches in width. The walls of the cabinet **10** and partition **17** are ¾ of an inch thick, so that the internal dimensions of the cabinet **10** are 17 inches in height, 16½ inches in depth, and 19 inches in width. The partition **17** is set two inches rearwardly of the inner surface of front wall **15**, so that the internal dimensions of the cavity **25** is 17 inches by 19 inches by 13¾ inches, and its total internal volume is substantially 4441 cubic inches. From this is deducted the volume of the speaker magnet and frame, leaving a net cavity volume of approximately 4000 cubic inches. The area of the frontal aperture **16** is 4 inches wide by 17 inches high, giving a value of 68 square inches for the factor A in the formula. For convenience, the ducts **18** are optionally made 2 inches wide by 17 inches high, so that their combined total area is also 68 inches. The length L of each duct, as indicated by the dotted line in Fig. 2, is approximately 10¾ inches.

The velocity of sound is taken at approximately 13,000 inches per second at average room temperature.

Applying the aforementioned values to the Helmholtz formula

$$f=\frac{C}{2\pi}\sqrt{\frac{A}{LV}}$$

we have:

$$f=\frac{13{,}000}{2\pi}\sqrt{\frac{68}{10\frac{3}{4}\times 4000}}$$

Thus the resonant frequency of the cabinet is computed to be 82.3 cycles per second. Actual measurements of an enclosure of these dimensions have shown the resonant frequency of the cabinet to be between 80 and 85 cycles per second, depending upon the stiffness of the speaker diaphragm employed.

In actual practice there is no pronounced peak observed at the resonant frequency of the cabinet, since the damping of the speaker cone in the vicinity of 82 C. P. S. produces an anti-resonance rather than a noticeable resonance. This damping produces a sound pressure peak at about 60 C. P. S.; which results in smooth response frequency characteristics down to a frequency of between 50 and 55 C. P. S., depending on the characteristics of the speaker used.

In the arrangement disclosed, the provision of a relatively small air mass behind the speaker, which air mass is restricted in movement by the size of the slots **18**, results in an effective coupling of the speaker cone with said air mass which is especially beneficial in the low frequencies by eliminating frequency doubling and tripling in the vicinity of 30 and 40 cycles. This effect is pronounced, for instance, in the bass reflex type of enclosure.

The front waves of the vibrating speaker cone **21** pass straight through the front aperture **16**, thereby allowing exit of the higher frequencies without attenuation which may be caused by travel of the high frequency waves in an angular path due to a folded exit duct. In this connection it should be noted that the front aperture **16** is in registry with the apex or center of the speaker cone **21** in which area the high frequency waves are created.

We find it preferable to dimension the area of the front aperture **16** roughly ⅓ to ½ the area of the speaker cone **21** so that the area in front of the speaker is diminished by ⅓ to ½. In this way, the back and front of the speaker are balanced in relation to the enclosed volume of air in the cabinet **10**. We have found that the construction of aperture **16** with an area of 68 square inches, which is about 50% of the cone area of a 15 inch speaker provides only a loss of two decibels in volume when compared to a six cubic foot bass reflex cabinet of conventional design employing the same speaker.

In the modified speaker enclosure shown in Fig. 6, the front wall **30** is provided with a front aperture **31** which may be in the form of a parallelogram as shown. The resonant frequency of the cabinet will remain the same as previously described even though the shape of this front aperture **31** is altered so long as the area of the aperture

31 is determined by the Helmholtz formula, as previously mentioned. For example, in a speaker enclosure of the same size as that of Figs. 1 through 5, the aperture 31 may have an area of 68 square inches which is the same as the area of front aperture 16 of Figs. 1 through 5. The shape of the aperture 31 is such that a larger area of the speaker cone is exposed at its central portion so that the high frequency waves generated at the center or apex of the speaker cone 21 are permitted more direct and unobstructed exit from the cabinet. This results in better sound reproduction at the high frequencies than the elongated aperture 16 of Figs. 1 through 5. It is to be understood that instead of the shape shown in Fig. 6, the aperture 31 may be made in any similar suitable shape such as elliptical shape, a diamond shape, etc.

By constructing the cabinet 10 as described to provide a natural resonant frequency in the neighborhood of 80 cycles per second, the effect on the low frequency back waves emitted by the speaker is to reproduce the bass register accurately down through the low frequency range, eliminating the peaks which normally occur at about 100 to 120 C. P. S., and their attendant boominess and coloration.

While a preferred embodiment of the invention has been shown and described herein, it is obvious that numerous additions, changes, and omissions may be made without departing from the spirit and scope thereof. In the claims where a "speaker" is referred to, it is intended to cover broadly any type of acoustic drive means.

We claim:

1. A loud speaker enclosure comprising a cabinet having parallel walls, said cabinet being entirely closed except for a restricted aperture in a wall thereof, a rigid partition panel mounted within said cabinet parallel to and spaced behind said wall and cooperating therewith to define a lateral duct which communicates with said aperture, said partition panel having an opening which registers with the restricted wall aperture and also having a planar surface remote from said wall and sized to receive a speaker in a flushly mounted position with its mouth in registry with and closing off said opening, a portion of said panel being also spaced from the opposite wall of said cabinet to form an enclosed cavity therebehind, a marginal edge portion of said panel being spaced from an adjacent side wall of said cabinet to define at least one aperture leading from said enclosed cavity through said lateral duct to said wall aperture, said cabinet wall aperture being sufficiently smaller than the partition panel opening to cause the speaker diaphragm to be front loaded, the volumes of said cavity and duct and the areas of said apertures being proportioned relative to one another to provide a selected natural resonant frequency of said enclosure in the low audible frequency range.

2. A loud speaker enclosure comprising a cabinet having parallel walls, said cabinet being entirely closed except for a restricted aperture in a wall thereof, a rigid partition panel mounted within said cabinet parallel to and spaced behind said wall and cooperating therewith to define a lateral duct which communicates with said aperture, said partition panel having an opening which registers with the restricted wall aperture and also having a planar surface remote from said wall and sized to receive a speaker in a flushly mounted position with its mouth in registry with and closing off said opening, a portion of said panel being also spaced from the opposite wall of said cabinet to form an enclosed cavity therebehind, a marginal edge portion of said panel being spaced from an adjacent side wall of said cabinet to define at least one aperture leading from said enclosed cavity through said lateral duct to said wall aperture, said cabinet wall aperture being sufficiently smaller than the partition panel opening to cause the speaker diaphragm to be front loaded, the volumes of said cavity and duct and the areas of said apertures being proportioned relative to one another to provide a selected natural resonant frequency of said enclosure, according to the formula:

$$f=\frac{C}{2\pi}\sqrt{\frac{A}{LV}}$$

where
C is the velocity of sound
L is the length of the duct
A is the cross-sectional area of the duct, and
V is the volume of the cavity.

3. A loud speaker enclosure comprising a cabinet having parallel walls, said cabinet being entirely closed except for a restricted aperture in the front wall thereof, a rigid partition panel mounted within said cabinet parallel to and spaced between said front and rear walls to divide said cabinet into a rear cavity and a front lateral duct communicating with said front wall aperture, said partition panel having an opening concentric with the front wall aperture and also having a planar rear surface sized to receive a speaker in a flushly mounted position with its mouth in registry with and closing off said panel opening, a marginal edge portion of said panel being spaced from an adjacent side wall of said cabinet to define at least one aperture interconnecting said rear cavity and said front lateral duct, said cabinet wall aperture being sufficiently smaller than the partition panel opening to cause the speaker diaphragm to be front loaded, the volumes of said cavity and duct and the areas of said apertures being proportioned relative to one another to provide a selected natural resonant frequency of said enclosure in the low audible frequency range.

4. A loud speaker enclosure comprising a cabinet having parallel walls, said cabinet being entirely closed except for a restricted aperture in the front wall thereof, a rigid partition panel extending the height of said cabinet and mounted within said cabinet parallel to and spaced between said front and rear walls to divide said cabinet into a rear cavity and a front lateral duct which communicates with said front wall aperture and is of substantially lesser volume than said rear cavity, said partition panel having an opening concentric with the front wall aperture and also having a planar rear surface sized to receive a speaker in a flushly mounted position with its mouth in registry with and closing off said panel opening, said cabinet wall aperture being sufficiently smaller than the partition panel opening to cause the speaker diaphragm to be front loaded, the marginal side edges of said partition panel being parallel with and spaced along their entire lengths from the respective adjacent side walls of said cabinet to define a pair of rectangular apertures interconnecting said rear cavity and said front lateral duct, said rectangular apertures forming with said duct a pair of paths for the travel of back waves from the rear cavity to the front wall aperture, the combined cross-sectional areas of said paths being substantially equal to the cross-sectional area of said front wall aperture, the volume of said cavity, the length and cross-sectional area of said duct, and the area of said rectangular aperture being proportioned relative to each other to provide a selected natural resonant frequency of said enclosure in the low audible frequency range.

5. A loud speaker enclosure according to claim 4 in which said enclosure is rectangular and said cavity is of a size only slightly larger than the size of said speaker.

6. A loud speaker enclosure according to claim 4 in which the volume of the cavity, the length and cross-sectional area of the duct, and the area of said rectangular aperture are proportioned relative to each other according to the formula:

$$f=\frac{C}{2\pi}\sqrt{\frac{A}{LV}}$$

where
C is the velocity of sound
L is the length of the duct
A is the cross-sectional area of the duct, and
V is the volume of the cavity

7. A loud speaker enclosure according to claim 6 in which the enclosure is provided with a selected natural resonant frequency in the low audible frequency range, substantially below 100 cycles per second.

8. A loud speaker enclosure comprising a cabinet having a frontal opening, a speaker mounted in said enclosure with its mouth spaced rearwardly from and in registry with said frontal opening, an enclosed air cavity in said cabinet in communication with the rear of said speaker, a duct extending from said air cavity to the frontal opening for the passage of back sound waves from said speaker out of the enclosure through said duct and said frontal opening, said duct being of appreciably smaller cross-sectional area than said air cavity to introduce an acoustic resistance to the back waves travelling therethrough, said frontal aperture having a cross-sectional area appreciably smaller than the mouth of said speaker to provide front loading of said speaker thereby reduc-

ing the sound amplitude at the natural resonant frequency of the enclosure and broadening the response frequency range of said enclosure in the direction of the low audible frequencies.

9. A loud speaker enclosure comprising a cabinet having a frontal opening, a speaker panel mounted in said cabinet rearwardly spaced from said frontal opening for the mounting of a speaker thereon with its mouth in registry with said frontal opening, an enclosed air cavity in said cabinet in communication with the rear of said speaker, a duct extending from said air cavity along the front of said speaker to the frontal opening for the passage of back sound waves from said speaker out of the enclosure through said duct and said frontal opening, said enclosure portions being proportioned relative to one another to provide a selected natural resonant frequency of the enclosure in the low audible frequency range, said duct being of appreciable smaller cross-sectional area than said air cavity to introduce an acoustic resistance to the back waves travelling therethrough, said frontal aperture having an appreciably smaller cross-sectional area than the mouth of said speaker to provide front loading of said speaker, thereby reducing the sound amplitude at the natural resonant frequency of the enclosure and broadening the response frequency range of said enclosure in the direction of the low audible frequencies.

References Cited in the file of this patent

UNITED STATES PATENTS

Number	Name	Date
1,604,017	Brigham	Oct. 19, 1926
1,843,524	Stenger	Feb. 2, 1932
1,878,018	Stephens	Sept. 20, 1932
1,969,704	D'Alton	Aug. 7, 1934
2,050,575	Krause	Aug. 11, 1936
2,080,275	Hutter	May 11, 1937
2,143,175	Waite	Jan. 10, 1939
2,373,692	Klipsch	Apr. 17, 1945
2,627,931	Flewelling	Feb. 10, 1953

FOREIGN PATENTS

Number	Country	Date
297,539	Great Britain	Sept. 27, 1928
971,128	France	Jan. 12, 1951