US00D324680S

United States Patent [19]

Alves et al.

[11] Patent Number: Des. 324,680

[45] Date of Patent: ** Mar. 17, 1992

[54] CORDLESS TELEPHONE WITH ANTENNA

[76] Inventors: **Joe Alves**, 14 Valentine St., New Bedford, Mass. 02744; **Maureen G. Aubut**, 11 Birchfield St., Fairhaven, Mass. 02719

[**] Term: **14 Years**

[21] Appl. No.: **624,682**

[22] Filed: **Dec. 10, 1990**

[52] **U.S. Cl.** **D14/138**; D14/148; D14/248

[58] **Field of Search** D14/138, 147, 248, 151; 379/433, 440, 434, 435, 436, 440, 58, 59, 60; 455/89, 90; D21/111

[56] **References Cited**

U.S. PATENT DOCUMENTS

D. 273,492	4/1984	Coons et al.	D14/147
D. 278,053	5/1985	Menn et al.	D14/147
D. 283,707	5/1986	Goodin et al.	D14/138
D. 283,889	5/1986	Steinbeck	D14/138
D. 284,663	7/1986	Edwards et al.	D14/138
D. 286,877	11/1986	Powell	D14/248
D. 294,496	3/1988	Drakulovic et al.	D14/138
D. 297,636	9/1988	Aramoni	D14/147
D. 305,533	1/1990	Perkins et al.	D14/151
D. 312,636	4/1990	Arm	D14/248
4,092,600	4/1978	Zimmermann	325/55
4,588,859	5/1986	Libermann	179/37
4,669,107	5/1987	Lennartsson	379/60
4,677,654	1/1987	Lagin	379/58
4,697,260	9/1987	Grauel	455/33

Primary Examiner—Horace B. Fay, Jr.
Attorney, Agent, or Firm—Terry M. Gernstein

[57] **CLAIM**

The ornamental design for a cordless telephone with antenna, as shown and described.

DESCRIPTION

FIG. **1** is a bottom, front and right side perspective view of a cordless telephone with antenna showing our new design;
FIG. **2** is a front elevational view thereof;
FIG. **3** is a rear elevational view thereof;
FIG. **4** is a right side elevational view thereof; the side opposite being a mirror image;
FIG. **5** is a top plan view thereof;
FIG. **6** is a bottom plan view thereof.

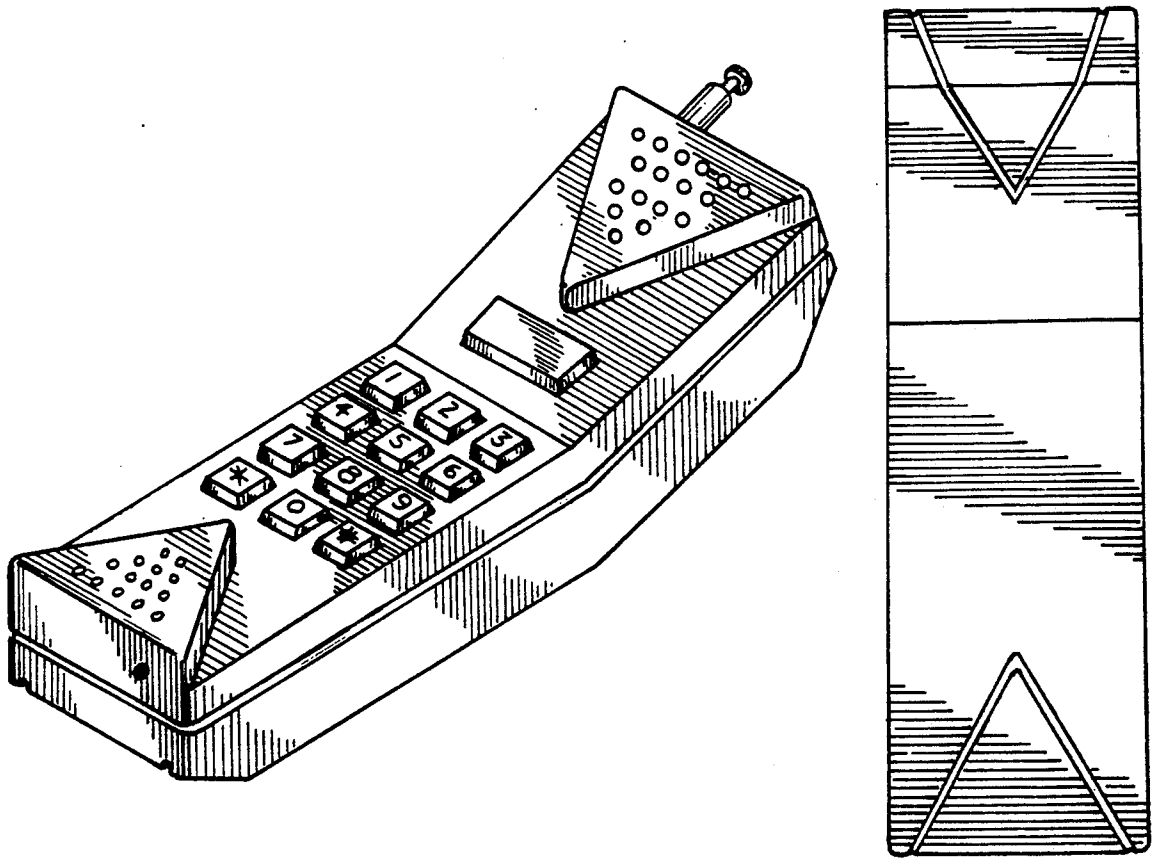

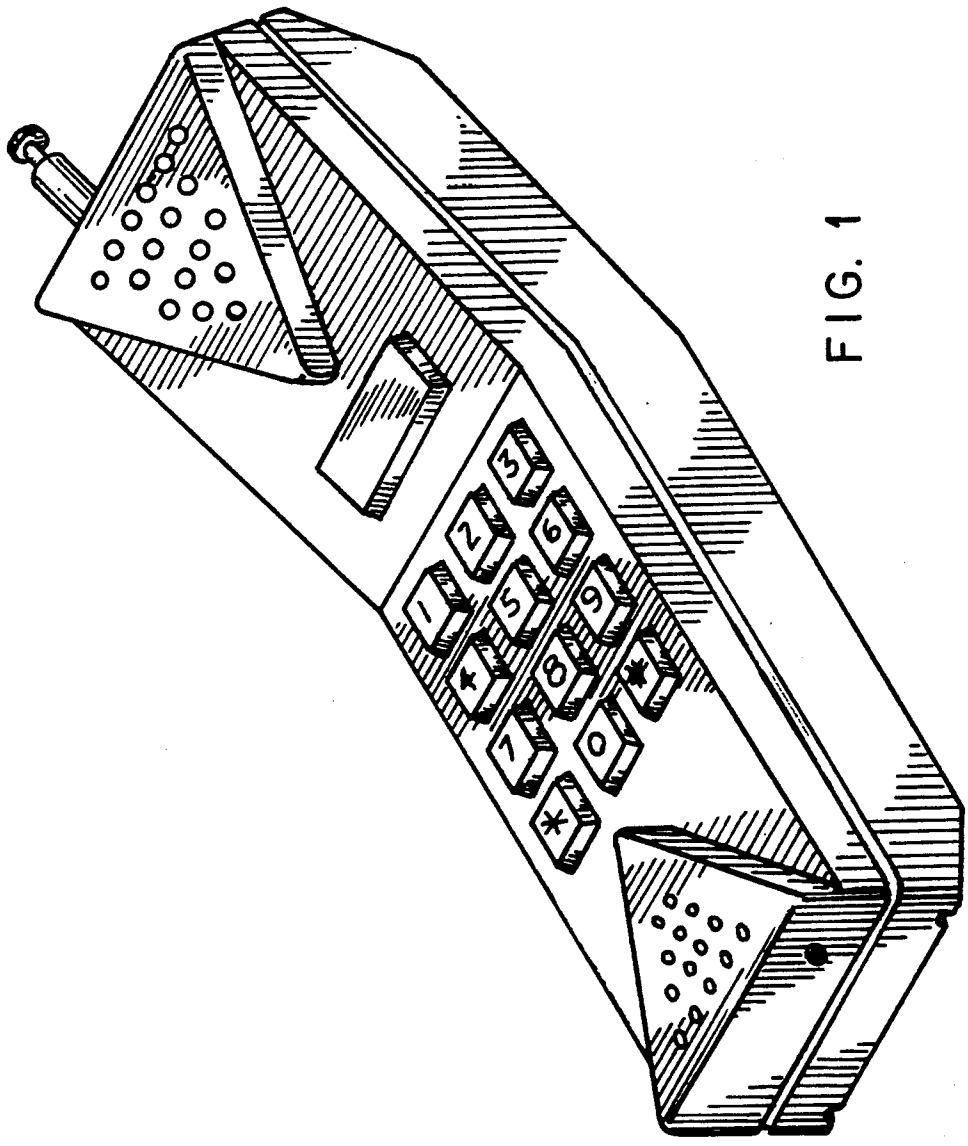

FIG. 1

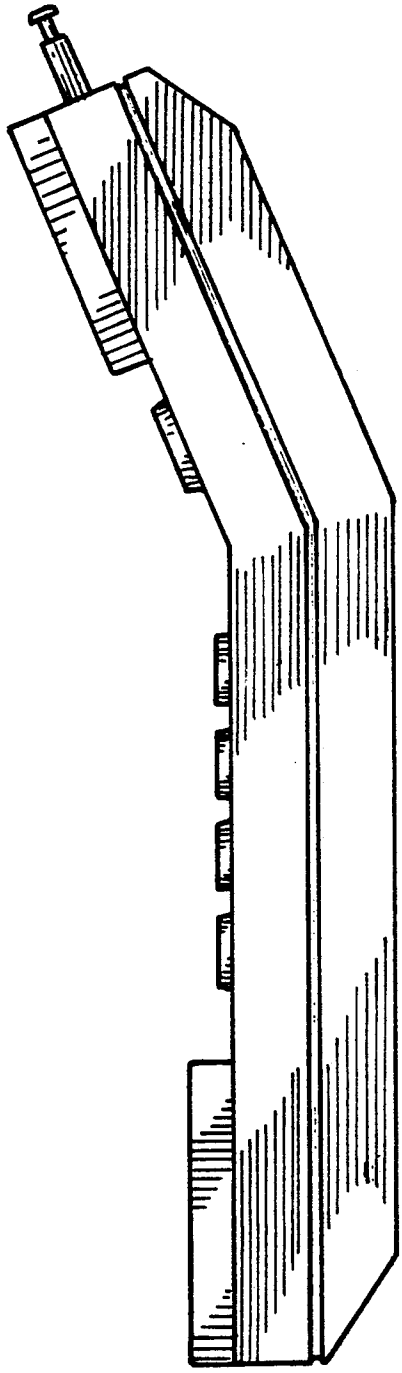

FIG. 4

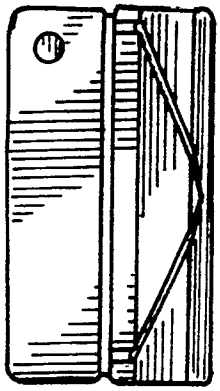

FIG. 5

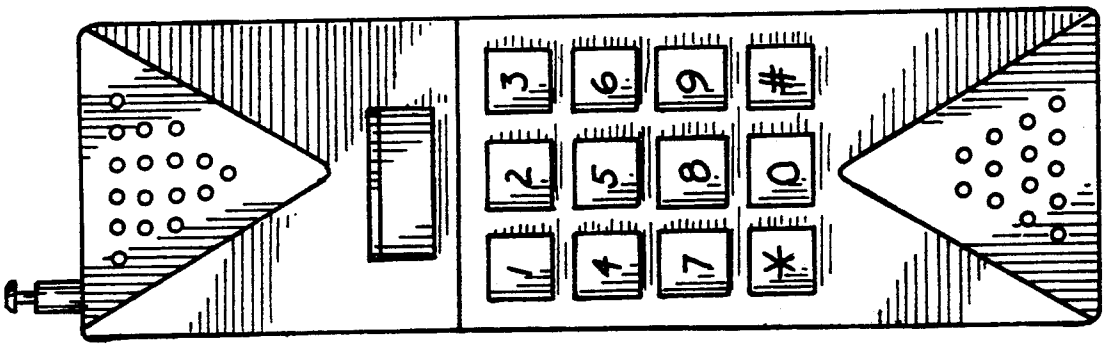

FIG. 2

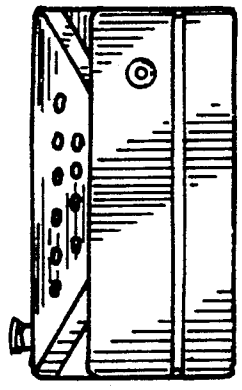

FIG. 6

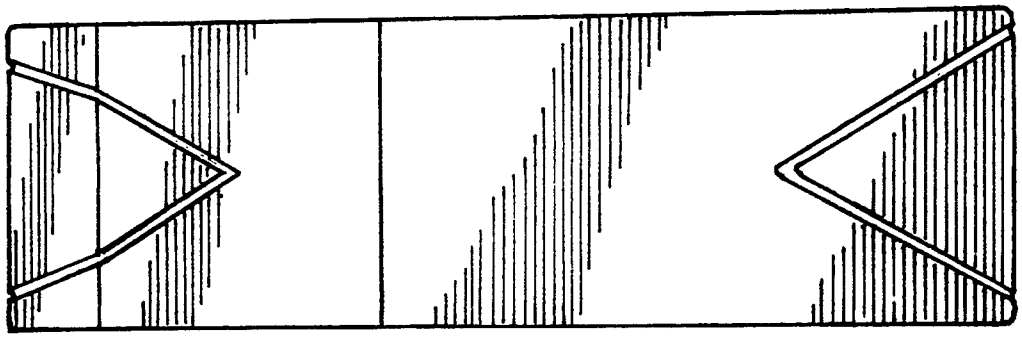

FIG. 3