350-275

CROSS REFERENCE

SEARCH ROOM

240
46.63

Jan. 28, 1964 D. CLOSE 3,119,566

ILLUMINATION DIMINISHING DEVICE

Filed June 27, 1960

X2682

FIG. 1

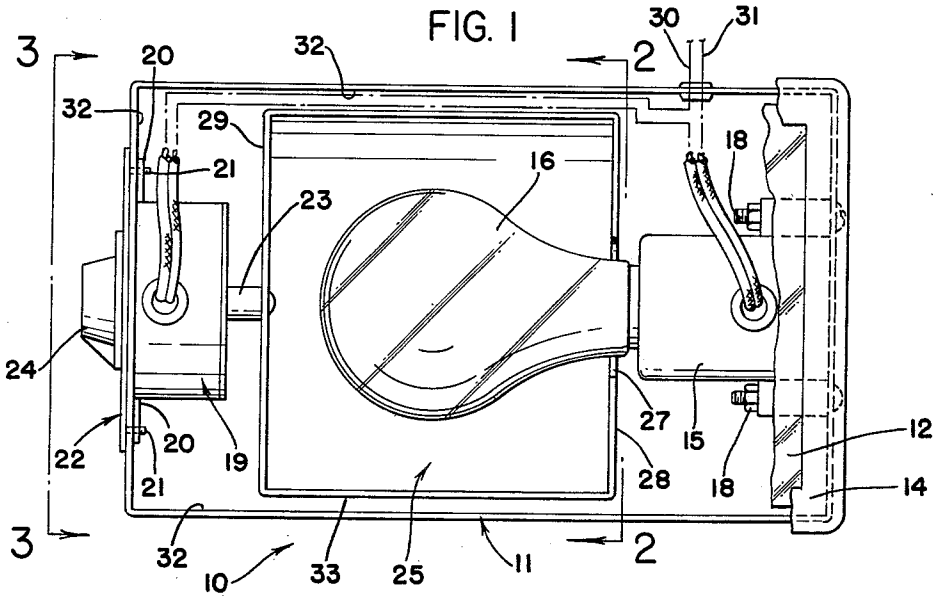

FIG. 2

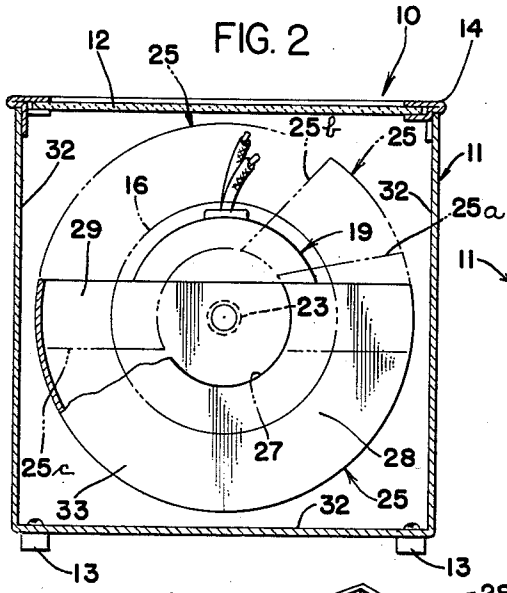

FIG. 3

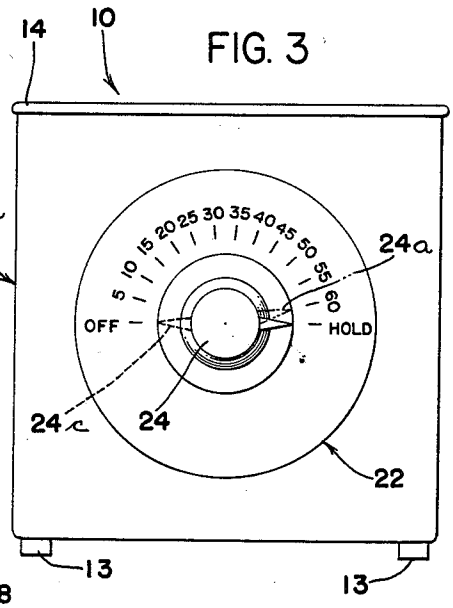

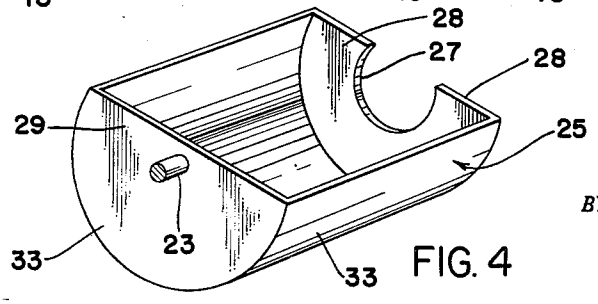

FIG. 4

INVENTOR.
DONALD CLOSE

BY Ely, Frye & Hamilton

ATTORNEYS

United States Patent Office 3,119,566 Patented Jan. 28, 1964

3,119,566

ILLUMINATION DIMINISHING DEVICE

Donald Close, 441 Park Ave., Kent, Ohio

Filed June 27, 1960, Ser. No. 38,902
2 Claims, (Cl. 240—46.03)

The present invention relates to a dimming light. More particularly, the present invention relates to an improved device for gradually diminishing the illumination in an artifically lighted room. Specifically, the present invention relates to an improved device whereby the illumination in a room may be gradually diminished over a preselected period of time, until the artifical illumination is completely extinguished.

Young children are notoriously afraid when suddenly engulfed in darkness. Because of this, parents are often required to leave a light burning in the child's room until he falls asleep. This placebo can be afforded and, at the same time, sleep can be psychologically induced by a gradual reduction of illumination—simulating twilight.

Several known devices have been constructed in an attempt to simulate the setting sun and thereby provide gradual diminution of the illumination level within an artifically lighted room. These known devices have accomplished their purpose by various modifications of a basic electrical circuitry. That is, the dimming of the illumination intensity from all these devices is generally ascribable to a controlled variation of the electrical current to a light source by means of a variable resistance in circuit therewith. Such constructions have necessitated the use of expensive rheostats, or substitutes therefor, and complicated switching, wiring, timing and rheostat arm driving means.

It is, therefore, the principal object of the present invention to provide an improved device, in the nature of a light, from which the lumen output is gradually mechanically diminished and then extinguished during a predetermined period of time.

It is a further object of the invention to provide an improved illumination diminishing device which can also be used as a source of constant illumination.

It is a still further object to provide an illumination diminishing device of simplified construction which will be inexpensive to manufacture.

These and other objects which will become apparent to the reader of the following specification are accomplished by maens hereinafter described and claimed.

One preferred embodiment is shown by way of example in the accompanying drawings and hereinafter described in detail without attempting to show all of the various forms and modifications in which the invention might be embodied; the invention being measured by the appended claims and not by the details of this specification.

Referring to the drawings:

FIG. 1 is a schematic plan view, partially cut away, of an illumination diminishing device according to the present invention.

FIG. 2 is a sectional view taken substantially on line 2—2 in FIG. 1.

FIG. 3 is an elevation taken substantially on line 3—3 in FIG. 1.

FIG. 4 is a perspective view of a rotatable canopy as used in the preferred embodiment of the present invention.

In general, an illumination diminishing device according to the present invention comprises a constant light source positioned within a non-reflecting container having at least one side adapted to permit mechanical or shutter controlled emanation of light.

Referring now to FIGS.1–3, the illumination diminishing device, designated generally by the numeral **10**, has a preferably rectangular enclosure **11** constructed from an opaque material with a transparent, or translucent, side **12**. The enclosure **11** may be adapted to rest on a table, as by resilient feet **13**, or may be adapted to serve as a wall or ceiling fixture, by suitable means (not shown). As shown, the transulcent side **12** may be attached to a side of enclosure **11** by an edge plate **14**. A light socket **15** and light bulb **16** are secured to the interior of enclosure **11**, as by nuts and bolts **18**.

A conventional combination timer and switch **19** may be secured within enclosure **11**, as by lugs **20** engaging threaded stems **21** extending inwardly from a dial plate **22** on the outside of enclosure **11**. The timer switch **19** is preferably provided with a through-arbor **23**. One end of arbor **23** extends to the outside of enclosure **11** and mounts a control knob **24**. The other end of arbor **23** is operatively connected to a rotatable type shutter or canopy **25**. Canopy **25**, as best seen in FIG. 4, is preferably a hollow, opaque cylinder which has been truncated on a plane parallel to and outwardly of the longitudinal axis. A semi-circular aperture **27** is provided in an end **28** so that the canopy **25** may rotatably encompass bulb **16** adjacent socket **15**. Canopy **25** is preferably constructed of a lightweight material to permit cantilever support thereof by attaching arbor **23** to the opposite end **29** without hindering the operation of the timing mechanism.

The timer in timer switch **19** may be spring, thermo, or electrically operated and may incorporate a hold feature. That is, as the control knob **24** is turned from the "off" position to the "hold" position, indicated on dial plate **22**, the arbor **23** rotates canopy **25** through 180°. Because of the hold feature, the canopy **25** is retained in this position, permitting unrestricted radiation of light through side **12**. To begin the timed diminution of illumination issuing from device **10**, the knob **24** is turned to indicate the preselected time on dial plate **22**. If, for example, the control knob **24** is set at 60 minutes, **24***a*, the canopy is positioned at **25***a* (as in FIG. 2). Over a period of 60 minutes the canopy **25** gradually moves from **25***a* through intermediate positions, represented by **25***b*, to a position **25***c* completely between light **16** and translucent wall **12**. At this time, the switch portion of timer-switch **19**, connected in series on power lines **30** and **31** with socket **15**, has been rotated to the "off" position, with the knob at **24***c*, to open the circuit and extinguish the bulb **16**.

In order to assure a constant rate to the gradual diminution of the illumination commensurate with the rotation of canopy **25** and further to assure that only a minute quantity of light emanates from the device **10** immediately prior to extinguishment of light **16**, the interior **32** of the enclosure **11** and the exterior surface **33** of canopy **25** are preferably non-reflective.

It will be noted that the illumination from device **10** may be diminished by a variety of shutter configurations which will controllably position to restrict the illumination emanating from the light source **16** through side **12**. Examples of such configurations can be descriptively characterized as being adaptations of Venetian blinds, shades or doors. In view of the present disclosure such shutter configurations can be adapted according to the invention for timed closure by one skilled in the art.

What is claimed is:

1. In an illumination diminishing device for simulating twilight in a child's nursery, the combination comprising, an enclosure having substantially nonreflective interior surfaces, an electric light source mounted within said enclosure and having constant lumen intensity when energized, a transluscent side portion in said enclosure permitting the

passage of light therethrough, a nonreflective canopy shutter rotatably mounted within said enclosure and partially surrounding said light source, means for setting said shutter at preselected positions so as to provide different sized light openings, said canopy having substantially nonreflective interior and exterior surfaces, timed driving means mounted on said enclosure and having an arbor extending within said enclosure and operatively connected to said canopy shutter for rotation thereof, said timed driving means adapted to rotate said shutter at a constant speed for a preselected period of time so as to gradually interpose said shutter between said light source and said translucent portion of said enclosure thereby gradually diminishing the light emanating from said enclosure, switch means electrically connected to said light source and operatively connected to said timed driving means and adapted to be opened by said timed driving means to de-energize said light source, and a control knob mounted on the exterior of said enclosure and adapted to operate said switch means, set said timed driving means and rotatably move said canopy shutter to a preselected open position.

2. In an illumination diminishing device for simulating twilight in a child's nursery, the combination comprising, an enclosure having opposite first and second ends, said enclosure having substantially nonreflective interior surfaces, an electric light source disposed centrally within said enclosure and mounted to said first end of said enclosure, said electric light source having constant lumen intensity when energized, a translucent side portion in said enclosure permitting the passage of light therethrough, a nonreflective canopy shutter disposed within said enclosure and rotatably cantilever-mounted to said second end of said enclosure, said canopy partially surrounding said light source and being spaced therefrom for rotation

therearound, said canopy having substantially nonreflective interior and exterior surfaces, means for setting said shutter at preselected positions so as to provide different sized light openings, timed driving means mounted on said second end of said enclosure and having an arbor extending within said enclosure and operatively connected to said canopy shutter for rotation thereof about said light source, said timed driving means adapted to rotate said shutter at a constant speed for a preselected period of time so as to gradually interpose said shutter between said light source and said translucent portion of said enclosure thereby gradually diminishing the light emanating from said enclosure, switch means electrically connected to said light source and operatively connected to said timed driving means and adapted to be opened by said timed driving means to de-energize said light source, and a control knob mounted on the exterior of said enclosure and adapted to operate said switch means, set said timed driving means and rotatably move said canopy shutter to a preselected open position.

References Cited in the file of this patent

UNITED STATES PATENTS

141,010	Mitchell	July 22, 1873
1,311,951	Crawford	Aug. 5, 1919
1,803,119	Lucas	Apr. 28, 1931
2,310,900	Mayer	Feb. 9, 1943
2,324,384	Grimes	July 13, 1943
2,349,355	Kepler	May 23, 1944
2,368,804	Chatelain	Feb. 6, 1945
2,813,161	Tuttle	Nov. 12, 1957
2,875,321	Dolivia	Feb. 24, 1959