(19) Europäisches Patentamt
European Patent Office
Office européen des brevets

(11) EP 0 760 087 B2

(12) **NEW EUROPEAN PATENT SPECIFICATION**

(45) Date of publication and mention of the opposition decision:
21.04.2004 Bulletin 2004/17

(45) Mention of the grant of the patent:
29.04.1998 Bulletin 1998/18

(21) Application number: **95918680.0**

(22) Date of filing: **15.05.1995**

(51) Int Cl.[7]: **G01D 5/20**

(86) International application number:
PCT/GB1995/001095

(87) International publication number:
WO 1995/031696 (23.11.1995 Gazette 1995/50)

(54) POSITION ENCODER

WEGGEBER

CODEUR DE POSITION

(84) Designated Contracting States:
AT BE CH DE DK ES FR GB GR IE IT LI LU MC NL PT SE
Designated Extension States:
LT LV SI

(30) Priority: **14.05.1994 GB 9409711**
26.08.1994 GB 9417353
03.10.1994 GB 9420597
25.11.1994 GB 9423861

(43) Date of publication of application:
05.03.1997 Bulletin 1997/10

(73) Proprietor: **Synaptics (UK) Limited**
Harston, Cambridgeshire CB2 5NH (GB)

(72) Inventors:
- **DAMES, Andrew, Nicholas Scientific Generics**
Harston Cambridgeshire CB2 5NH (GB)
- **ELY, David, Thomas, Eliot Scientific Generics**
Harston Cambridgeshire CB2 5NH (GB)
- **HOWE, Andrew, Robert, Linton**
Scientific Generics
Harston Cambridgeshire CB2 5NH (GB)

(74) Representative:
Beresford, Keith Denis Lewis et al
BERESFORD & Co.
16 High Holborn
London WC1V 6BX (GB)

(56) References cited:
EP-A- 0 159 191
EP-A- 0 182 085
EP-A- 0 446 181
CH-A- 548 016
GB-A- 2 064 125
JP-A- 1 034 158
JP-T1- 1 034 158
US-A- 2 942 212
US-A- 3 647 963
US-A- 3 906 436
US-A- 3 962 663
US-A- 4 005 396
US-A- 4 878 553
US-A- 5 214 427

EP 0 760 087 B2

Description

FIELD OF THE INVENTION

[0001] The present invention relates to linear, rotary and radius position encoders generally. The invention has particular although not exclusive relevance to non-contact linear, rotary and radius position encoders. The invention is particularly suited for use in systems where there may be electromagnetic interference.

DISCUSSION OF THE PRIOR ART

[0002] Many types of non-contact linear position sensors have been proposed. A system similar to the present invention is the "inductosyn" type system described in US 4005396. In particular, US 4005396 discloses a system that employs a plurality of square wave windings mounted on the surface of a stationary element, and a coil connected to an a.c. power source mounted on a movable element. The square wave windings each comprise a plurality of "high" and "low" parts and have different periods. The system determines the position of the movable element relative to the stationary element by utilising the variation in mutual inductance between the coil and the plurality of square wave windings. More specifically, when the power source energises the coil, a large current is induced in a square wave winding if the coil is adjacent a high part thereof. Only a small current is induced in a winding if the coil is adjacent a low part thereof. Therefore, the position of the movable element along the length of the stationary element can be determined from the signals on the windings.

[0003] However, this system has a number of disadvantages. Firstly, the system is not "balanced", i.e. it is not immune to electromagnetic interference. The present inventors have realised that this is because the ground connection is through a base plate or the like and there is no symmetry in the system. Indeed US 4005396 acknowledges the interference problem and tries to solve it by providing an additional winding designed to detect electromagnetic interference. The signal from this extra winding is then used to adjust the signals from the square wave windings. However such a solution requires an additional "interference" winding which increases the system complexity and therefore manufacturing cost.

[0004] Secondly, the system is sensitive to variations in the power level of the power source and is relatively sensitive to changes in the separation between the movable element and the stationary element. The present inventors have realised that this is because the system relies on amplitude modulating the signal from the power source and no ratiometric type calculation is performed. However, this document offers one solution to the separation problem which involves constraining the movement of the movable element by providing guide rails along which the movable element runs. Although this solution may work in some applications, it will not work for all applications. For example it will not work in a lift system, since it is impractical to constrain the lift so that there is no significant lateral movement within the lift shaft.

[0005] Thirdly, the use of square wave windings give rise to the problem that if measurements are made close to the windings (i.e. at a spacing of typically less than 1/8 of the period of windings then the shape of the winding as perceived by the pick up device gives rise to harmonics e.g. third, fifth, seventh etc harmonics which distort the measured results which are obtained.

[0006] The present applicant has already proposed a rotary position encoder in WO94/25829 (published 10, 11, 94) which employs an excitation coil, two receive coils and a resonant circuit mounted on the rotatable element. The arrangement is such that in response to an excitation current in the excitation coil, the resonant circuit produces signals in the receive coils whose amplitudes depend upon the orientation of the rotatable element. Therefore, by suitable processing the orientation of the rotatable member can be determined. However, the disclosure of this reference does not extend beyond rotary positioning encoding.

[0007] US-A-5 214 427 discloses a position sensor having quadrature sensor windings, a movable resonant device and an excitation coil for energising the resonant device. The device is arranged so that when energised the resonant device induces signals a the quadrature sensor windings which vary with the position of the movable resonant device.

SUMMARY OF THE INVENTION

[0008] In one aspect the invention provides a position detector including: first and second members mounted for relative movement along a measuring path; said first member comprising a first circuit having at least two loops arranged in succession along said measuring path, each loop extending along said path and said loops being connected in series and being arranged so that EMFs induced in adjacent said loops by a common background alternating magnetic field oppose each other, and a second circuit extending along said measuring path; said second member comprising means for interacting with said circuits, such that in response to an input driving signal being applied to said second circuit there is induced in said first circuit an output signal, said interacting means and said at least two loops of said

first circuit being arranged so that said output signal continuously varies as a function of their relative position along said path; and drive means arranged to apply an input driving signal to said second circuit; characterised in that said second circuit comprises at least two loops arranged in succession along said measuring path, each loop extending along said path and the loops being connected in series and being arranged so that EMFs induced in adjacent said loops by a common background alternating magnetic field oppose each other, and in that said interacting means comprises an electromagnetic resonant device arranged so that, in operation, an intermediate signal is induced therein by said input driving signal applied to said second circuit and so that said intermediate signal induces said output signal in said first circuit.

[0009] The present invention also provides a position detector including: first and second members which are relatively movable along a measuring path; said first member comprising: (i) a first circuit having a plurality of loop portions which cross said path and which are connected together to form first and second sets of loops arranged in succession along said measuring path, each loop extending along said path and said loops being connected in series and being arranged so that EMFs induced in loops of the same set by a common background alternating magnetic field add together and so that EMFs induced in the first set of loops by a common background alternating magnetic field oppose the EMFs induced in the adjacent second set of loops; and (ii) a second circuit extending along said measuring path; said second member comprising means for interacting with said circuits, such that in response to an input driving signal applied to one of said circuits there is induced in the other said circuit an output signal, said interacting means and said first and second sets of loops being arranged so that said output signal continuously varies as a function of their relative position along said path; characterised in that said interacting means comprises an electromagnetic resonant device arranged so that; in operation, an intermediate signal is induced therein by said input driving signal applied to said one circuit and so that said intermediate signal induces said output signal in said other circuit; and in that the loop portions which cross said path in each set of loops are arranged with decreasing and increasing density along said measuring path so that the magnetic sensitivity of the circuit is sinusoidal.

[0010] The present invention also provides a position detector including: first and second members mounted for relative movement along a measuring path said first member comprising a printed circuit board carrying a plurality of conductor tracks on at least two layers of the board, which tracks are arranged on the board and appropriate ones of which are connected together through the board at a plurality of via holes, to form a first circuit which extends along said measuring path and a second circuit which extends along said measuring path; wherein said first circuit comprises at least two loops arranged in succession along said measuring path, each loop extending along said path and said loops being connected in series and being arranged so that EMFs induced in adjacent said loops by a common background alternating magnetic field oppose each other; said second member comprising means for interacting with said circuits, such that in response to an input driving signal applied to one of said circuits there is induced in the other said circuit an output signal, said interacting means and said at least two loops being arranged so that said output signal continuously varies as a function of their relative position along said path; characterised in that said interacting means comprises an electromagnetic resonant device arranged so that, in operation, an intermediate signal is induced therein by said input driving signal applied to said one circuit and so that said intermediate signal induces said output signal in said other circuit; in that said via holes are grouped in first and second groups which are transversely spaced relative to said measuring path and in that said loops are formed by a plurality of said conductor tracks each of which extends between a respective via hole in the first group and a respective via hole in the second group.

[0011] By providing a resonant circuit on the second member, the second member does not require any external connections or electrical or mechanical contact with the first member. Preferably the loops of the first circuit are derived from opposed sinusoidal convolutions of conductor since this permits both interpolation using the received signals to give a higher accuracy of measurement and may enable sinusoidal signals to be received even where the space between the first circuit and the resonant device is small. The use of loops connected in series and arranged so that EMFs induced in adjacent loops by common background alternating magnetic field oppose each other not only reduces the sensitivity of the position detector to the common background magnetic field, but also to other external perturbations such as metallic bodies located close to the first circuit.

[0012] Preferably, two or more first circuits are provided with the loops of the respective circuits being spatially separated in the measurement path. This allows the determination of the relative positions of the first and second members by performing a ratiometric calculation which results in the output being insensitive to the spacing between the first circuit and the resonant device.

[0013] When used as a translational position encoder, the invention may comprise a lift having means for indicating its position in a lift shaft, said means being the position detector as aforesaid. The translational position encoder may be used to determine the relative position of other fixed and movable members in engineering and metrology, for example the position of a movable printer head of a dot matrix or ink jet printer or similar device relative to the supporting structure within which the printer head reciprocates.

[0014] The invention also provides a liquid level sensor comprising a float, a support on or in which the float is slidably guided, and a linear position encoder in the form of the relative position measuring apparatus as aforesaid.

[0015] The invention is also applicable to shaft position encoders, for example for a valve or throttle having a rotary shaft and a position encoder for each shaft, the encoder being a rotary encoder as aforesaid. Such an encoder is advantageously used for the monitoring of shafts of limited angular travel, e.g. less than 180° and in particular not more than 120°. Such limited travel shafts can be used to control for example gate valves which can be turned on or off within a 90° rotational movement, and vehicle throttle shafts where the angular movement is usually not more than 120°.

[0016] The invention is applicable to industrial process control, for example to a fluid flow meter comprising a tapered tube and a float in the tube that is displaced to a longitudinal position determined by the flow of fluid, a position detector as aforesaid being provided for indicating the relative position of the float and the tube. Such apparatus may additionally be provided with means by which rotation of the float, which may contain one or more resonators, may be monitored or compensated for.

[0017] The present invention also provides a position detector including: first and second members mounted for relative movement along a measuring path; said first member comprising a first circuit having at least two loops arranged in succession along said measuring path, each loop extending along said path and said loops being connected in series and being arranged so that EMFs induced in adjacent said loops by a common background alternating magnetic field oppose each other, and a second circuit extending along said measuring path; said second member comprising means for interacting with said circuits such that in response to an input alternating drive signal applied to one of said first and second circuits there is induced in the other circuit an output alternating signal which varies as a function of the position along said path of said interacting means relative to said at least two loops of said first circuit; characterised in that said interacting means comprises an electromagnetic harmonic generator arranged so that, in operation, in response to said alternating drive signal, said harmonic generator induces said alternating output signal in said other circuit, and wherein the frequency of the induced signal is different to that of the drive signal.

BRIEF DESCRIPTION OF THE DRAWINGS

[0018] How the invention may be put into effect will now be described, by way of example only, with reference to the accompanying drawings , in which:

Figure 1 schematically shows a lift system having a position encoder embodying the present invention;
Figure 2a is an isometric view of a linear positioning encoder embodying the present invention that is used in the lift system shown in Figure 1;
Figure 2b is an end view of a thin sliver cut from a position encoder track forming part of the encoder of Figure 2a;
Figures 2c and 2d are layers of printed conductors from which a practical encoder track may be formed;
Figure 2e is a diagrammatic view of the resulting 2-layer printed encoder track;
Figures 2f, 2g and 2h show alternative configurations of the conductors that form the encoder track;
Figure 3 shows a single period of a "spiral winding" and the effect that far-field electromagnetic interference has on it;
Figure 4a schematically illustrates a part of the linear positioning encoder shown in figure 2a and contains a plot of its magnetic sensitivity against resonator positions, Figure 4b is a diagram showing an energising pulse and Figure 4c is a diagram showing the current induced in the resonant circuit in response to the excitation current;
Figure 5a is a schematic representation of preferred excitation and processing circuity used to determine for the positioning encoder of Figures 2a and 4a the position of the resonant circuit;
Figure 5b is a graph showing output voltage against time for an integrator forming part of the circuitry of figure 4a;
Figure 6a is a three-dimensional plot of the sensitivity of the spiral windings to an external magnetic field for changing resonator position;
Figure 6b is a two-dimensional plot of the peak magnitude of the sensitivity as a function of the separation between the resonant circuit and the support;
Figure 7 schematically shows one example of an absolute position encoder embodying the present invention;
Figure 8a shows another absolute position encoder embodying the present invention and the processing circuitry required to determine the resonant circuit position, and Figure 8b shows a yet further form of the absolute position transducer and processing circuitry.
Figure 9 shows another absolute position encoder embodying the present invention and the processing circuitry required to determine the position of the resonant circuit;
Figure 10 shows another absolute position transducer embodying the present invention;
Figure 11 schematically illustrates an alternative linear position encoder embodying the present invention;
Figures 12a and 12b show alternate forms of a three-phase spiral winding together with the associated excitation and processing circuitry, but differing in the way in which energy is applied and the position signal is received, and Figure 12c shows a four-phase spiral winding and its associated processing circuity;

Figure 13a schematically shows a liquid level sensor embodying the present invention;
Figure 13b illustrates how the transducer shown in Figure 13a can be formed around a support in a helical fashion;
Figure 14a schematically illustrates a transducer suitable for use in a rotary position encoder embodying the present invention;
Figure 14b schematically illustrates a resonant circuit that is suitable for use in the rotary embodiment illustrated in Figure 14a;
Figure 15 schematically illustrates a linear position encoder comprising a single period of spiral windings in quadrature;
Figure 16 is a graph of a typical resonance characteristic for a resonant circuit;
Figures 17 and 18 schematically illustrate further forms of a linear position encoder;
Figure 19 is a schematic representation of preferred excitation and processing circuitry used to determine for the position encoder shown in Figure 18, the position of the harmonic generator;
Figure 20 is an isometric view of a preferred float arrangement used in the liquid level sensor system shown in Figure 13;
Figure 21 is a plan view of another float arrangement that can be used in the liquid level sensor system shown in Figure 13a;
Figure 22 schematically illustrates a fluid flow rate sensing system employing a transducer according to the present invention;
Figure 23a schematically shows a float that is suitable for use in the fluid flow rate system shown in Figure 22;
Figure 23b schematically illustrates a preferred form of the float used in the fluid flow rate system shown in Figure 22;
Figure 23c shows in section another fluid flow rate system employing two transducers embodying the present invention;
Figure 23d schematically illustrates the form of the float used in the fluid flow rate sensing system shown in Figure 22 when the float is spherical;
Figure 24 is an isometric view illustrating how orthogonal excitation coils may be formed around the support in the liquid level sensing system shown in Figure 13;
Figures 25a and 25b are respectively views of a position encoder track and balanced resonator coils according to another embodiment of the invention;
Figure 26 shows part of a two-dimensional displacement transducer according to another embodiment of the invention;
Figures 27a and 27b are diagrams showing the relationship between an apparent measurement position and a real measurement position for a single coil, and the use of a pair of coils to adjust the apparent measurement position, permitting reduction of the adverse effects of coil tilt;
Figures 28a and 28b are views of alternative forms of a radial position transducer; and
Figure 29 shows a modified form of the transducer shown in Figure 28b that is suitable for use in a linear position encoder.

DETAILED DESCRIPTION OF PREFERRED EMBODIMENTS

[0019] Figure 1 schematically shows a lift system having a lift 1 that travels up and down a lift shaft 3. Attached to one of the side walls of the lift shaft 3 there is a transducer support 5 of electrically insulating material attached to the wall by fixing points 7. Mounted on the support 5 there is a transducer (not shown) which is connected to an excitation and processing unit 11. In this embodiment, a resonant circuit 10 is mounted on top of the lift such that when excited, it generates signals in the transducer (not shown) which are dependent upon the position of the lift within the shaft 3. These signals are then processed by the excitation and processing unit 11 which determines the position of the lift and outputs signals 12 to the lift controller (not shown). The processing circuitry can also determine the velocity and acceleration of the lift from past position indications, which information can be used by the lift controller (not shown) to optimally control the lift.

[0020] To operate effectively in the lift environment, the sensor system must be relatively insensitive to the separation between the transducer support 5 and the resonant circuit 10, since lifts are prone to lateral movement. Indeed, the system should typically be tolerant to shifts in lateral movement of about ± 8mm in any direction.

[0021] Present lift systems use a combination of rope and pulley sensors, optical fin sensors and shaft encoders on the motor and winding gear. However, these sensors have the following drawbacks. In the rope and pulley system, the rope is connected to the lift and runs over a pulley wheel which has a rotary encoder mounted on it. This system suffers from rope slip over the pulley and badly defined dynamics if the length of the lift shaft is large. Mechanical wear is also a problem. In the optical fin system, a fin at each floor interrupts an optical beam break sensor mounted on the lift. This system can be used to compensate the slip of the rope and pulley system. However, since the lift controller is

mounted on the lift shaft and needs to communicate with the sensor, an additional communication link is required between the shaft and the lift. The shaft encoder system suffers from the disadvantage that it is indirect since it acts on the motor and winding gear and not on the lift directly. Therefore, as the system changes due, for example, to stretching of the support ropes with load and time, so the system will lose accuracy.

[0022] Figure 2a is an isometric view of a linear position sensor embodying the present invention, and which may be used in the lift system shown in Figure 1. As shown in Figure 2, there are a pair of phase quadrature conductive windings 13 and 15 and an excitation loop 16 mounted on a support 5. In a simple form as shown to in Figure 2b the windings 13, 15 and the excitation loop 16 could take the form of insulated wires of copper or other conductor adhered e.g. by an epoxy adhesive in the required pattern onto a substrate 5 of fibre glass or other flat insulating sheet material. In a more developed form as shown in Figures 2c to 2e conductive patterns are formed in successive printed circuit layers which are shown in Figures 2c and 2d, each layer having conductors in a printed pattern as shown and extending between via holes. When the two layers are superimposed and connected through the via holes as shown in Figure 2e there is obtained a track of the required sinusoidal or "spiral" configuration. The same principle can be used to provide additional layers e.g. of other "spiral" conductors or coarse position indicating tracks as described in more detailed below.

[0023] Each winding 13 and 15 starts from one end 5a of the support 5 and follows a sinuous path therealong until it reaches the other end 5b, where it returns back along the support 5 following a sinuous path to the starting end 5a. The sinusoidal forward and return paths that form each winding 13 and 15 have period T_s and are in antiphase, i.e. they are substantially 180° out of phase. The windings 13 and 15 shown in Figure 2 and described above, will hereinafter be referred to as "spiral windings" since they visually resemble a flattened helix. The spiral windings 13 and 15 are insulated from each other, either by using via holes to the other side of the support 5 at the cross-over points, or by using a laminated conductor-insulator structure. If a laminate structure is used, the support 5 should be non-magnetic and preferably non-conducting for reasons that will become apparent later. The spiral windings 13 and 15 may be formed using any conductive wire, but are preferably formed by etching or other standard printed circuit board technique. The excitation loop 16 runs around the periphery of the support 5 and may comprise a single loop of conductor or alternatively may comprise many turns of conductive wire.

[0024] Each end of the spiral windings 13 and 15 and the excitation loop 16 are connected to the excitation and processing unit 11. As those skilled in the art will realise, in practice the excitation and processing circuit 11 can be provided by a power source and a single semiconductor integrated chip.

[0025] Figure 2a also shows a coil of wire 14 and a capacitor 17 that together form the resonant circuit 10 that is mounted on top of the lift 1 shown in Figure 1. As represented by arrows 19, the resonant circuit 10 is free to move along the length of the support 5, i.e. along the x-axis of Figure 2a. Preferably, the axis 21 of the coil 14 is orthogonal to the surface of the support 5 on which the spiral windings 13 and 15 are mounted, as this provides the greatest magnetic coupling between the spiral windings 13 and 15 and the coil 14. The configuration of the excitation loop 16 is designed to give constant coupling with the resonant circuit 10 irrespective of its position along the length of the support 5.

[0026] The wire used to form coil 14 can be of any conductive material but is preferably Litz wire which is a multi-stranded wire having low a.c. resistance. Litz wire is available from Elektrisola Dr. Gerd Schildbach GmbH & Co., of Inderhuvttenwiese D-5226 Reichshof-Eckenhagen, Germany.

[0027] Figures 2f, 2g and 2h show alternative configurations of the windings. In Figure 2f the windings have, when viewed overall, a hexagonal configuration, in Figure 2g they are triangular and in Figure 2h they are square waves.

[0028] The operation of the sensor system shown in Figure 2 will now be briefly described. When the position of coil 14 along the x-axis relative to the support 5 is to be determined, a burst of excitation current is applied to the excitation loop 16. The frequency of the burst should be such that it causes the circuit 10 to resonate. When the burst ends, the circuit 10 continues to resonate for a short period of time, and induces a current in each spiral winding 13 and 15. The magnitude of the current induced is dependent upon the position of the resonant circuit 10 along the x-axis. Therefore, by suitable processing of the currents induced in the spiral windings 13 and 15, the position of the resonant circuit 10 within a period of the windings 13 and 15 can be determined. As will become apparent later, two phase quadrature spiral windings are required to give unambiguous readings over the whole period T_s of the spiral windings 13 and 15. In the present embodiment, absolute position is determined by using a counter within the excitation processing unit 11 that counts the periods through which the resonant circuit has moved from a reference point. Preferably the reference point is defined by an additional conductor loop (not shown) at a chosen position on the support 5 as this allows the excitation processing unit 11 to recover absolute position after power has been removed by simply moving the resonant circuit 10 until the signal level in this additional loop is maximised. Additionally, improved accuracy may be achieved by averaging the values obtained over several such excitation and processing stages.

[0029] Although the operation of the circuit described above is in some respects similar to that of an "inductosyn" type variable phase transformer for sensing linear displacement, using the spiral windings 13 and 15 provides several advantages. In particular, since the windings 13 and 15 are not digital in nature, i.e. they are continuously varying along

the length of the support 5, the resolution of the system is theoretically infinite. In practice, however, the output signals are processed digitally and the resolution of the analog-to-digital converter (ADC) in the processing circuitry which digitizes the signals from windings 13, 15 will determine the resolution of the system. Another advantage of the spiral windings is that since the sinusoidal forward and return paths that form each winding 13 and 15 are in antiphase, the induced currents that flow in any loop and its adjacent loop are in opposite directions so that the corresponding magnetic fields are of opposite polarity and are effectively balanced. Therefore, they are relatively immune to electromagnetic interference. This is because, as is shown in Figure 3, any current induced in one loop A of a winding due to background electromagnetic radiation 23 is cancelled out by the current induced by the same background electromagnetic radiation in the adjacent loop B of the winding. Yet another advantage of the spiral windings is that their magnetic field sensitivity measured at any distance from the windings in a line parallel to their axis is sinusoidal. As a result, the system can be more tolerant to changes in the separation between the resonant circuit 10 and the support 5, i.e. movement along the y-axis, than the prior art inductosyn systems. In particular, the sensitivity of the spiral winding remains sinusoidal even for small separations between the resonant circuit 10 and the windings 13 and 15. Additionally, the system is relatively insensitive to dirt, dust, grease etc. that can affect the proper operation of optical type position sensors.

[0030] It should be noted that since the excitation loop 16 generates an even magnetic field along the length of the windings 13 and 15 and since the windings are balanced, the excitation loop and the windings 13 and 15 are effectively orthogonal. In other words the excitation loop 16 will not, in theory, induce current in the windings 13 and 15 and so the system could be operated in continuous waves (CW) mode i.e. excitation and reception of signals at the same time. However, in practice due to imperfections in the spiral windings especially at the ends thereof, some current will be induced in them by the excitation loop current. Therefore, the preferred mode of operation, in this embodiment at least, is pulse-echo i.e. transmit and then receive and process after the excitation has been removed.

[0031] The principle of operation of the system shown in Figure 2 will now be described in more detail with reference to Figures 4, 5 and 6. Figure 4a is a schematic diagram showing part of the spiral windings 13 and 15, the excitation loop 16 and the resonant circuit 10. As illustrated by arrows 19 the resonant circuit 10 is free to move in either direction along the axis of the spiral windings 13 and 15, i.e. along the x-axis. Figure 4a also shows a plot of the sensitivity function S(x) of each spiral winding to the magnetic flux density generated by the resonant circuit 10 as a function of the position x of the resonant circuit 10 along the support 5. As the resonant circuit 10 moves along the spiral windings 13 and 15, the corresponding sensitivity functions $S_{13}(x)$ and $S_{15}(x)$ vary in a phase quadrature sinusoidal manner, and are given by:

$$S_{13}(x) = A\cos\left(\frac{2\pi x}{T_s}\right) \tag{1}$$

$$S_{15}(x) = A\sin\left(\frac{2\pi x}{T_s}\right) \tag{2}$$

(where x and T_s are as defined above and A is the peak amplitude of the sensitivity function).

[0032] Figure 4b shows the burst of excitation current that is applied to the excitation loop 16 shown in Figure 4a. Each burst comprises a number of cycles of an excitation current. The number of cycles transmitted depends on the resonant frequency and quality factor (Q) of the resonant circuit 10. In this embodiment a burst of 64 cycles of a triangular wave signal having period 6μs is applied to the excitation coil 16, which is sufficient to cause circuit 10 to resonate. Figure 4c shows that the current I_r in the resonant circuit 10 increases in magnitude and begins to level off just before the excitation current is removed. After the burst ends, the circuit 10 still resonates but the amplitude of the current I_r decreases in an exponential manner with time. To allow the signal time to settle, the excitation and processing unit 11 waits for a short period of time, about 4 excitation cycles in this embodiment, before processing the signals on the windings 13 and 15.

[0033] Therefore, after the burst of excitation current has been removed the current flowing in the circuit 10 can be represented by:

$$I_r = \hat{I}_r e^{-\frac{t}{\tau}} \sin(2\pi f_r t) \tag{3}$$

where f_r is the resonant frequency of the circuit 10, which in this embodiment is approximately 166Khz, and where the exponential term which contains time t and the decay time τ represents exponential decrease in current amplitude with time.

[0034] The current I_r flowing in the resonant circuit 10 creates a magnetic flux density B_r, in the direction of the axis of the coil 14 that forms part of the resonant circuit, and can be represented by:

$$B_r = K_1 \hat{I}_r e^{-\frac{t}{\tau}} \sin(2\pi f_r t) \quad (4)$$

where K_1 is a constant of proportionality that depends on the physical nature of the coil 14, i.e. the number of turns, the radius, etc. The alternating magnetic flux density B_r induces an electromotive force (EMF) in each spiral winding 13 and 15 that is proportional to the rate of change of the magnetic flux density B_r, and that is amplitude modulated by the respective sensitivity function $S_{13}(x)$ and $S_{15}(x)$ of the corresponding spiral winding 13 and 15. Therefore, when the resonant circuit 10 is in the position shown in Figure 4 the EMF induced in spiral winding 13 will be given by:

$$EMf_{13} = 2\pi f_r K_2 \hat{I}_r e^{-\frac{t}{\tau}} S_{13}(d)\cos(2\pi f_r t) \quad (5)$$

and the EMF induced in spiral winding 15 will be given by:

$$EMf_{15} = 2\pi f_r K_2 \hat{I}_r e^{-\frac{t}{\tau}} S_{15}(d)\cos(2\pi f_r t) \quad (6)$$

where K_2 is a constant of proportionality dependent upon K_1 and the area enclosed by each spiral winding.

[0035] In the present embodiment, with each spiral winding 13 and 15 having a peak to peak separation of approximately 35mm and a period of 200mm and with the coil 14 of circuit 10 having a length of 100mm (i.e. in the z-direction of Figure 4a), width of 50mm (i.e. in the x-direction of Figure 4a) and a separation of 10mm from the support 5, and with the excitation loop 16 having a width of 45 mm (i.e. in the z-direction of Figure 4a), a peak EMF of approximately 180 mV per amp of excitation current may be induced in the spiral windings.

[0036] To determine where along the length of the spiral windings the resonant circuit 10 is, i.e. to determine the value of d within the period T_s, the signals from the spiral windings 13 and 15 are processed in the excitation and processing unit 11. Figure 5a schematically shows excitation and processing circuitry that may be used to calculate the position of the resonant circuit 10 within the period T_s of the spiral windings 13 and 15. As shown in Figure 5a there is a signal generator 41 that generates the excitation current that is applied to the excitation loop 16 via switch 42, amplifier 23 and transformer 24a. As mentioned above, in the present embodiment the excitation current is a triangular wave having period 6μs and is applied to the excitation loop 16 in a burst of duration 384μs. After the excitation signal has been removed from the excitation loop 16, i.e. when switch 42 opens the signals from spiral winding 13 are fed into one terminal of a two way switch 26 via a transformer 24b which removes common mode noise and a mixer 27a which demodulates the incoming signals. Similarly, signals from spiral winding 15 are fed into the other terminal of the two way switch 26 via another transformer 24c and mixer 27b. Each mixer 27a and 27b demodulates the incoming signals by multiplying them with a phase shifted version 39 of the transmit signal. In particular, a +90° phase shifted version or a -90° phase shifted version. A -90° phase shift is required since the resonant circuit 10 imparts a -90° phase shift on the excitation signal. The reason for the +90° alternative will be described later. Therefore, the signals at the output of the mixer 27a are given by:

$$V_{13} = K_3 S_{13}(d) + K_3 S_{13}(d)\cos 4\pi f_r t \quad (7)$$

and the signals of the output of mixer 27b are given by:

$$V_{15} = K_3 S_{15}(d) + K_3 S_{15}(d)\cos 4\pi f_r t \quad (8)$$

These signals are then multiplexed by switch 26 and filtered by low pass filter 29 to remove the high frequency components to give:

$$\tilde{V}_{13} = K_4 \cos\left(\frac{2\pi d}{T_s}\right) \quad (9)$$

$$\tilde{V}_{15} = K_4 \sin\left(\frac{2\pi d}{T_s}\right) \quad (10)$$

[0037] The filtered signals are then converted into digital signals by a dual slope type analog-to-digital converter, which has been adapted to use as inputs the two signals in quadrature and which outputs the ratio of the two filtered signals. This is achieved in the following manner. Firstly, the signal $\tilde{v}_{in}$ from spiral winding 13 is applied to integrator 31 (having time constant RC) for a fixed time t_o. The output of the integrator 31 will ramp-up with slope $\tilde{v}_{in}/RC$ if $\tilde{v}_{in}$ is positive and will ramp-down with slope $\tilde{v}_{in}/RC$ if $\tilde{v}_{in}$ is negative. While the integrator 31 is ramping up, or down as the case may be, a counter (not shown) in microprocessor 33 counts up at a fixed rate f_c. Then at the end of the fixed time t_o, the microprocessor 33 stores the value N_{13} that the counter (not shown) has reached, and operates switch 26 so that the signal $\tilde{v}_{in}$ from spiral winding 15 is applied to the integrator 31. As switch 26 is operated, the microprocessor 33 activates the +90° phase shift block 35 if the sign of the signal from winding 15 is the same as the sign of the signal from winding 13, otherwise it maintains the -90° phase shift. This ensures that the integrator 31 always ramps in the opposite direction in response to $\tilde{v}_{in}$ than it does in response to $\tilde{v}_{in}$. Therefore, if the signals from the two windings are both positive, then the +90° phase shift will be applied and V_{15} will be inverted and so the integrator 31 will ramp down with slope $\tilde{v}_{in}/RC$. While the integrator 31 ramps down, the counter within the microprocessor 33 counts up at the same rate f_c as during the ramp-up stage. When the output of the integrator 31 reaches zero, the output of the comparator 37 toggles and stops the counter in the microprocessor 33.

[0038] Figure 5b shows in more detail the signal output from the integrator 31 when the signals from both windings are positive. The value of N_{13} is given by the time t_o multiplied by the rate f_c at which the counter counts up. However, from Figure 5b it is apparent that at t_o the voltage V_m is given by t_o times the rate at which the integrator voltage ramps-up. Therefore, N_{13} is given by:

$$N_{13} = f_c t_o = f_c V_m \left(\frac{RC}{\tilde{V}_{13}}\right) \quad (11)$$

[0039] Similarly, the value of N_{15} is given by the time taken for the integrator 31 to count down to zero i.e. t_1 multiplied by the rate f_c at which the counter counts up. However, from Figure 5b it is apparent that t_1 equals V_m divided by the rate at which the integrator voltage ramps-down, i.e.:

$$N_{15} = f_c t_1 = f_c V_m \left(\frac{RC}{\tilde{V}_{15}}\right) \quad (12)$$

[0040] Therefore, by dividing N_{13} by N_{15} the resulting digital signal is equivalent to $\tilde{v}_{in}/\tilde{v}_{in}$, which equals:

$$\frac{\tilde{V}_{15}}{\tilde{V}_{13}} = \frac{K_4 \sin\left(\frac{2\pi d}{T_s}\right)}{K_4 \cos\left(\frac{2\pi d}{T_s}\right)} = \tan\left(\frac{2\pi d}{T_s}\right) \quad (13)$$

[0041] Therefore, the value of d can be determined, by the microprocessor 33, by performing an inverse tangent function and using an appropriate shift depending on the sign of the demodulated signals output from mixers 27a and 27b. More particularly, d is determined from the following equation:

$$d = [atan\left(\frac{\tilde{V}_{15}}{\tilde{V}_{13}}\right) + \pi \ (if \ \tilde{V}_{15} < 0)] \ \frac{T_s}{2\pi} \qquad (14)$$

[0042] As those skilled in the art will realise, equation 14 can be implemented by using N_{15} to address a look-up table since the value N_{15} will be directly related to the position of the resonant circuit 10.

[0043] In this embodiment the sign of the signals output from mixers 27a and 27b are determined by comparing them with ground using comparator 37. To achieve this, switch 28 controlled by the microprocessor 33 is provided that allows the signals from the filter 29 to by pass the integrator 31.

[0044] Assuming that it takes the processing circuitry approximately 400μs to determine the position of the circuit 10 within a period of spiral winding, then a reading can be taken approximately every millisecond. Therefore if absolute position is lost the velocity of the lift can still be determined provided it is not moving faster than $100ms^{-1}$ otherwise aliasing errors will occur.

[0045] The excitation and processing circuit shown in Figure 5a and described above is given by way of example only and should not be construed as limiting in any way.

[0046] In the above embodiment, the resonant circuit 10 is excited by a burst of excitation current from the local oscillator 41 which is tuned to the resonant frequency of the circuit 10. The resonant frequency f_r is preferably of the order of 10Khz to 1 MHz. Much lower than this, i.e. about 100Hz results in low induced EMF amplitudes in the windings and a poor response time. Much higher, i.e. about 100Mhz results in loss of accuracy due to cross-coupling between the spiral windings 13 and 15 and increased complexity and expense in the processing electronics.

[0047] It was mentioned above that the system shown in Figure 2 is relatively tolerant to changes in the separation or gap between the spiral windings 13 and 15 and the resonant circuit 10. The reason for this will now be explained with reference to Figures 6a and 6b. Figure 6a is a three dimensional plot of the sensitivity function S(x,y) for one period of a spiral winding. The x-axis of Figure 6a represents the position of the resonant circuit 10 along the spiral winding 13, the y-axis represents the distance of the resonant circuit 10 from the spiral winding 13 and the z-axis represents the magnitude of the sensitivity function S(x,y) of the spiral winding 13 to the magnetic flux density generated by the resonant circuit 10. Figure 6b is a two dimensional plot of the peak magnitude S(y) of the sensitivity function as a function of the separation between the resonant circuit 10 and the support 5. The peak value S(y) of the sensitivity function is shown to decrease as the resonant circuit 10 moves away from the spiral winding 13, i.e. with increasing y. However, Figure 6a shows that the sensitivity function S(x,y) varies sinusoidally with changing resonant circuit 10 position along the support, regardless of the separation y between the resonant circuit 10 and the support 5. In other words, with the sinusoidal spiral windings the problem of harmonic distortion that is common with prior art devices is removed or at least minimised.

[0048] Therefore, the sensitivity function of spiral winding 3 can be represented by:

$$S_{13}(x,y) = \hat{S}(y) \cos(\frac{2\pi x}{T_s}) \qquad (15)$$

[0049] The sensitivity function for spiral winding 15 shown in Figure 1 also has a peak magnitude given by $\hat{S}(y)$.. Therefore, when the ratiometric calculation shown in equation 13 is performed, the dependence on the separation y will be removed. The inventors have established that the systems performance is not compromised with separations of between zero and at least a quarter of the spiral period T_s. The spiral windings used in the present embodiment have a period of 200 mm. Therefore, the system can withstand separations of upto 50mm and will therefore meet the ±8mm lateral movement requirement with ease.

[0050] Additionally, it is possible to use the magnitude of the signals induced in the spiral windings to determine the separation between the resonant circuit 10 and the support 5. However, since the magnitude is affected by other system variables such as excitation power etc., the calculations of the separation may not be accurate.

[0051] Theoretically, the spiral windings can have any period T_s, and therefore the sensor can be of any length. However, as the period T_s of the windings increases, the resolution to which the detector can detect changes in position decreases. The reason is that small changes in position of the resonant circuit 10 within the period T_s of the spiral windings only produce small changes in the sensor signals. Whether these small changes are detected or not, depends on the resolution of the analog-to-digital converter used in the processing circuitry, the signal to noise ratio of the received signal and the spatial accuracy of the windings. Usually, for a given application, the resolution of the ADC is fixed by other system parameters or by cost, and may typically be an 8-bit ADC. The inventors have established that for an 8-bit ADC the resolution achieved with the spiral sensor is about 1 /400 of the period T_s of the spiral windings. Therefore, when the system designer specifies the resolution that is required, he effectively specifies the period of the

spiral windings.

[0052] In the first embodiment a counter was used to allow the system to keep track of the absolute position of the resonant circuit. Another solution to this problem is to provide a coarse and fine set of spiral windings along the length of the sensor. An example of such an arrangement is schematically shown in Figure 7 which shows part of a 2.4m long support 5 which has a set of fine quadrature spiral windings 13 and 15 with period 200mm, and a set of coarse quadrature spiral windings 43 and 45 with period 2.4m mounted thereon. The signals from the fine spiral windings are used to determine the position of the resonant circuit within the fine spiral period, and the signals from the coarse windings are used to determine which period of the fine windings the resonant circuit is adjacent. As shown in Figure 7 the fine and coarse set of windings 13, 15 and 43, 45 are superimposed on top of each other, and as in the first embodiment, vias or the like are used at the conductor cross overs. This arrangement is preferred since it maximises the symmetry of the system which in turn maximises the linearity and immunity to interference. For this solution to work, the coarse windings should be able to distinguish between the periods of the fine windings. If this is not possible, then one or more intermediate periodicity windings should be used.

[0053] Alternative solutions to the period ambiguity problem is shown in Figure 8. In particular, Figure 8a shows a first spiral winding 13 having period T_1 and a second spiral winding 47 having a slightly greater period $T_1 + \Delta t_1$. Additional quadrature windings will also be required but for clarity are only shown at the processing end 5a of the support 5. The difference in phase between the output signals from the two sets of quadrature windings 13, 47 indicates which period the resonant circuit is adjacent, and the signals from one of the sets of quadrature spiral windings can be used to determine the position within that period in the manner described above. For example the signals I_1 and Q_1 from the first set of quadrature spiral windings can be used to determine the position of the resonant circuit 10 within the period, and the signals I_1 and Q_1; I_2 and Q_2 from all the windings can be used to address a look-up table (LUT) of phase differences which outputs which period the resonant circuit 10 is adjacent. The look-up table will be specific for a particular sensor in which the windings have a period T_1 and period $T_1 + \Delta t_1$, and will have to be recalculated for another sensor in which these periods are changed. However, after a certain number of spiral winding periods, this solution will fail since the pattern will repeat. Figure 8b shows a way to extend the period of the pattern. In particular, in Figure 8b a third spiral winding 48 is used that has a period $T_1 + \Delta t_2$ different to the period of the winding 47. The outputs from the three spiral windings (and the outputs from the corresponding quadrature windings (not shown) as well) can then be used to infer the correct period.

[0054] Yet another solution to the period ambiguity problem is illustrated in Figure 9, which uses a set of gray code windings 51, similar to those employed in US 4005396, in combination with the quadrature spiral windings 13 and 15. The gray code windings 51 are shown lying adjacent the spiral windings 13 and 15 for clarity. Preferably, the gray code windings 51 are superimposed on top of the spiral windings 13 and 15 for maximum symmetry and minimum susceptibility to background interference. In this embodiment, the signals from the gray code scale are applied to a period decoder 53 which determines which period of the spiral windings the resonant circuit (not shown) is adjacent and fine positioning within a single period is detected as described above. However, this embodiment suffers from the disadvantage that it is relatively complicated and expensive to manufacture because many additional wires are required to provide the gray code windings 51.

[0055] The inventors envisage other solutions to the phase ambiguity problem, such as providing a digital barcode type identifier along the length of the sensor track that can uniquely identify which period the resonant circuit 10 is adjacent. In Figure 10 this barcode is provided by the separate lower track 44 shown, which is a pseudorandom digital data track which encodes the periods of the spiral windings 13 and 15. As in the figure 9 embodiment, the bar code identifier is shown adjacent the track for simplicity but is preferably superimposed on top of the windings 13 and 15.

[0056] In the above embodiments two phase quadrature spiral windings 13 and 15 were provided to generate quadrature signals from which the position of the circuit 10 within a period T_s can be determined unambiguously. Figure 11 shows another way in which quadrature signals can be generated, but this time only using a single spiral winding 13. In particular, figure 11 shows a multiperiod spiral winding 13, an excitation loop 16 and two resonant circuits 10a and 10b having different resonant frequencies f_1 and f_2 respectively. The two resonant circuits 10a and 10b are fixed relative to one another with a separation of one quarter of the spiral winding period T_s. As indicated by arrow 19, the two resonant circuits 10a and 10b are free to move along the length of the support (not shown) in either direction. When an excitation current having frequency f_1 is applied to the loop 16, circuit 10a will resonate and will generate a signal in spiral winding 13 dependent upon $\sin[2\pi d/T_s]$, where d is the position of circuit 10a within a spiral period. Similarly, when an excitation current having frequency f_2 is applied to the excitation loop 16, circuit 10b will resonate and will generate a signal in spiral winding 13 dependent upon $\sin[2\pi(d+T_s/4)/T_s]$ i.e. $\cos[2\pi d/T_s]$. Therefore, quadrature signals are generated from which the position of the circuit 10a (and therefore circuit 10b) within a spiral period can be determined.

[0057] In the above embodiments, the excitation signal is applied to an excitation loop 16 around the periphery of the support 5. One disadvantage of using such an excitation loop is that it is not balanced and will therefore suffer from and generate electromagnetic interference. Figure 12a shows a three phase spiral winding system which uses one of

the windings to excite the resonant circuit 10 as a result of which the excitation loop is also balanced. In particular, Figure 12a shows three spiral windings 53, 55 and 57 each 120° out of phase with the other two and a vector representation of the signals induced in the windings by the resonant circuit 10. In this embodiment, winding 53 is used to excite the resonant circuit 10 and the signals on winding 53 and the vector subtraction of the signals on windings 55 and 57 are used to determine the position of the resonant circuit. The vector subtraction of the signals on windings 55 and 57 produce a signal that is in phase quadrature with the signal on winding 53, and is represented in the vector representation by dotted arrow 59. However, in this embodiment, when the resonant circuit 10 is adjacent a crossing point of winding 53 the excitation signal is applied to winding 55 rather than winding 53. Furthermore, the signal on winding 55 and the signal representing the vector subtraction of the signals on windings 53 and 57 are used to determine the position of the resonant circuit. In this way, the system ensures that the resonant circuit 10 is excited for all positions along the support, and ensures that the excitation and receive windings are balanced.

[0058] In Figure 12b three spiral windings 53, 55, 57 are fed at one end with a respective phase of a three phase a. c. exciting current via the excitation and processing unit 11. The windings are connected together at the other end to provide the neutral line of the three phase system, and the signal appearing at the neutral line is returned to the processing unit 11. The resonant circuit 10 unbalances the neutral line and gives rise to a signal whose amplitude depends on the separation of the resonant circuit 10 from the windings 53, 55, 57 and whose phase depends on the position of the circuit 10 within a period of the windings.

[0059] Figure 12c shows yet another configuration that the spiral windings can take. In particular, in Figure 12c there are four spiral windings 63, 65, 67 and 69 each separated from the other by 1/8 of the period of the windings. As in the other embodiments, an excitation loop 16 is provided around the periphery of the support 5 and the excitation loop 16 and the ends of the spiral windings 63, 65, 67 and 69 are fed into the excitation and processing unit 11. The inventors have established that by using such a four phase system any spatial harmonics produced, generated in the windings are suppressed.

[0060] In the above embodiments, the spiral windings 13 and 15 essentially lie in a single plane. However, it is also possible to wind the spiral windings around a support in a helical pattern and achieve the same advantages as the flat pattern. This form of the invention is particularly suitable for use in fluid level sensing. Figure 13a schematically shows a liquid level sensor employing the spiral type windings embodying the present invention. In Figure 13a, a support 1305 has a cylindrical shape around which the spiral windings 1313 and 1315 are wound in a helical fashion. As those skilled in the art will realise, the support 1305 must be transparent to the magnetic field generated by the resonant circuit 1310, otherwise it will affect the correct operation of the sensor. Also shown in Figure 13a is the excitation loop 1316 which energises the resonant circuit 1310 mounted on float 1320. Preferably, the float 1320 is torroidal and fits over the support 1305 and windings 1313 and 1315 and can float freely up and down the cylindrical support 1305 as the level of liquid (not shown) rises or falls within the container (not shown) as illustrated by arrow 1319. In this embodiment the float 1320 is also constrained so that it does not rotate about the support 1305. As those skilled in the art will realise, if the float 1320 could rotate then the position indicated by the processing unit 1311 will change for the same height. If a flat spiral had been used along the side of the support 1305 then this rotational problem would not cause the same problem. This problem is discussed in more detail later.

[0061] Figure 13b illustrates how the spiral windings 1313 and 1315 should be wound around the support 1305. Essentially, the spiral windings 1313 and 1315 are formed from four wires 1313a, 1313b and 1315a, 1315b starting on the outside of the support 1305, spaced at 90° intervals, and rotated in a helical pattern along the length of the support 1305. At the far end (not shown) of the support 1305 the wires spaced apart by 180° are connected together, such that wires 1313a and 1313b form one spiral winding 1313 and wires 1315a and 1315b form the second quadrature spiral winding 1315. Additional windings may also be wound around the support 1305 to provide a period encoder when there are a plurality of periods of the spiral windings. The operation of this embodiment is similar to the operation of the first embodiment. One advantage with this helical design is that it is much easier to manufacture than the flat design since the wires are simply wound around the support.

[0062] Figures 14a and 14b show how the "spiral" transducer can be modified to be suitable for use in a rotary position encoder. In particular, Figure 14a shows a fixed circular support 1405 upon which spiral windings 1413 and 1415 are wound in a circular fashion. In this embodiment, there are three periods of each spiral winding 1413 and 1415 around a support. As in the linear embodiment, the conductor crossovers are avoided by using vias to the other side of the support or by a using conductor-insulator laminate structure. There is also an excitation loop 1416 mounted on the support 1405 which is used to excite the resonant circuit mounted on the movable element, which will be free to rotate about the axis of the support. To retain linearity in the system, the resonant circuit should be as symmetric as possible.

[0063] Figure 14b shows the rotatable element 1401 which will rotate relative to the support 1405 shown in Figure 14a about the centre point 1491 as indicated by arrows 1419. Mounted on the rotatable element 1401 there is a resonant circuit 1410 which is designed to maximise linearity of the system. The operation of this rotary embodiment is similar to the operation of the linear embodiments.

[0064] In the foregoing embodiments multi-period spiral windings were provided along the support of the position encoder. However, in some applications a shorter length support may be sufficient in which case only a single period set of spiral windings needs to be provided. Figure 15 shows a support 1505 carrying an excitation coil 1516 and two spiral windings 1513 and 1515 in phase quadrature occupying a single period T_S. The windings are connected to an excitation and processing unit 1511 as before. Although this form of the device may be suitable for some applications, it is less preferred because end defects reduce accuracy.

[0065] In the above embodiments, a resonant circuit was mounted on the movable object. This has the advantage that it still generates a magnetic field after the excitation signal has been removed, which means that no power source is required on the movable object. However, it is equally possible to fix the position of the resonant circuit and allow the support to move. Additionally, it is also possible to determine the position of a plurality of movable objects by employing a resonant circuit having a different resonant frequency in each object. Figure 16 shows the resonant characteristic of a resonant circuit. Ideally, if the resonant frequencies are to be close together then this characteristic should have a high maximum value, a low minimum value and a narrow peak width δw, or in other words the resonator should have a high quality (Q) factor. One method of improving this characteristic is to employ a quartz or ceramic type resonator in series with the coil 14 and capacitor 17. In such an embodiment, the value of the inductance of the coil 14 and the value of the capacitance of the capacitor 17 are preferably chosen so that their impedance cancel at the resonant frequency of the quartz or ceramic resonator, as this maximises the sharpness of the resonant characteristic. The quartz or ceramic resonators are preferably suitable for surface mounting onto printed circuit boards as this minimises the space required for them. Suitable ceramic resonators are supplied by AVX Kyocera, Stafford House, Station Road, Aldershot, Hants, United Kingdom or Murata, distributed by Cirkit, Mercury House, Calleza Park, Aldermaston, Reading, Berkshire, United Kingdom.

[0066] In Figure 17 the arrangement of the support 1705, the excitation coil 1716 and the windings 1715 and 1713 are as before. However, in this embodiment there are two movable objects (not shown) each having a respective resonant circuit 1710A and 1710B having different resonant frequencies. The position of each movable object associated with the respective resonant circuits 1710A and 1710B may be determined by exciting each resonant circuit in turn, or by exciting all the resonant circuits at once using a "white-noise" signal, i.e. a signal containing all frequencies, and using well known signal processing techniques to determine the position of each movable object. Although the resonant frequencies associated with each object can have any value, they are preferably chosen to be relatively close together so that the bandwidth of the system is not too large. Otherwise, the electronics will become complex and hence more expensive.

[0067] In the above embodiments, signals on the spiral windings are only processed after the excitation signal has been removed. The reason for this is to reduce the interference caused by the cross-coupling with the excitation signal. However, if a harmonic generator is used instead of the resonant circuit, then it is possible to distinguish the signals generated by the harmonic generator from the excitation signal. Therefore, if a separate excitation coil is provided, then it will be possible to determine the position of the harmonic generator while the excitation signal is still being applied to the excitation coil. This is possible since the harmonic generator has a non-linear magnetic characteristic which produces, in response to an excitation signal, a magnetic field with components including harmonics of the excitation frequency. These higher frequency harmonics can be distinguished from the excitation signal and can therefore be used to determine the position of the harmonic generator while the excitation signal is still being applied to the excitation coil.

[0068] Figure 18 shows an embodiment where a harmonic generator 1901 is mounted on the movable element (not shown) instead of a resonant circuit. This embodiment is described with reference to a flat spiral design, but is also applicable to the other embodiments described above. Figure 18 shows a support 1905 upon which spiral windings 1913 and 1915 and an excitation loop 1916 are mounted. The excitation loop 1916 must be able to excite the harmonic generator 1901 into its non-linear region when it is in any of its allowed positions, i.e. along the whole length of the support 1905. The excitation loop 1916 mounted around the periphery of the support 1905 shown in Figure 17 is one example of an appropriate excitation loop.

[0069] Figure 19 shows an example of the signal generator that generates the excitation signal, and the processing circuitry in the excitation and processing block 1911 shown in Figure 18. In particular, a pseudo-square wave generator 2061 generates an excitation signal having a fundamental frequency f but with no 3f, 9f, 15f etc. harmonics which is continuously applied to the excitation loop 1916. The signals from the quadrature spiral windings 1913 and 1915, (and from other windings 1971 if absolute position is required) are fed into an analog multiplexer 2026 controlled by microprocessor 2033. The signal from each winding is amplified by amplifier 2073 and mixed in mixer 2027 with a signal 2039 whose frequency is three times the frequency of the fundamental frequency f of the excitation signal, i.e. the third harmonic. Therefore, the component of the received signal having frequency 3f (which is the component of interest generated by the harmonic generator 2001) will be demodulated, whereas the other components will not be. The demodulated component is then removed from the high frequency components by the low pass filter 2029, converted into a digital signal in ADC 2075 and fed into microprocessor 2033 where it is temporarily stored. Once the signals

from all the windings have been processed in this manner, the microprocessor 2033 calculates the absolute position of the movable object using equation 14 above.

[0070] The harmonic generator 1901 is typically made from a non-linear magnetic material which can be driven past its saturation point into its non-linear region by the excitation signal, e.g. Vacuum Schmelze 6025 Spinmelt Ribbon. Alternatively, a coil connected to a non-linear electrical element such as a diode may also be a suitable harmonic generator 1901 (in which case the processing circuitry would be tuned to the second harmonic of the excitation signal).

[0071] A problem with the harmonic generator embodiment described above, is that the presence of other ferrous materials within the system may also generate background harmonic signals. However, this distortion may be minimised by (i) reducing the coercivity and permeability of the harmonic generator 1901 so that it generates harmonics at lower transmitter field levels than the surrounding ferrous materials, e.g. well below 50 A/m; and/or (ii) using materials with a sharp saturation point so that high levels of high frequency harmonics may be measured which are not typically encountered in ferrous materials. Suitable materials which have these features are long, thin spin melt amorphous metals, (Metglass) supplied by Allied Signal of 6 Eastmans Road, Persippany NJ 07054, New Jersey, USA; and sputtered magnetic materials such as nickel alloys. Additionally, the shape factor of the material should be high to enable high permeability to be achieved. This may be achieved using long, thin samples or very thin flat samples.

[0072] Magnetic materials excited to the non-linear region with a single frequency a.c. field with no direct current (d. c.) component produce odd harmonics of the drive current. However, if materials of very low permeability are employed then the earth's field may be sufficient to degrade odd harmonic generation by biassing the harmonic generator out of the non-linear region. A possible solution is for the system to apply a d.c. bias field to counteract the earth's field. The required d.c. bias may be determined by minimising the detected level of even harmonics or maximising the detected level of odd harmonics.

[0073] Another possibility with using a harmonic generator is exciting it with two different excitation frequencies F_1 and F_2. In such an embodiment, the harmonic generator will generate a magnetic field having intermodulation components, i.e. components at $F_1 \pm F_2$.

[0074] The harmonic generator embodiment is highly suited to measuring the position of a float, since it is highly resistant to dirt, salt water etc which may cause electrical damping of an inductor/capacitor resonator., and can operate with large gaps between the float andthe support. Furthermore, the harmonic generator has the advantage overthe resonant circuit that it will couple with the spiral windings regardless of its orientation. This is true even when the harmonic generator consists of amorphous metal that has a preferred magnetic axis, since it is possible to layer the material in alternate orientations thereby obtaining a suitably isotropic device.

[0075] In the embodiments where a resonant circuit is used, its shape, mass, resonant frequency etc. will be dictated by the particular application and will also dictate to some extentthe accuracy of the system. The inventors have established that a high degree of accuracy is achieved when the diameter of the coil that forms part of the resonant circuit is approximately twice the width of the spiral windings and approximately equal to half the period of the spiral windings.

[0076] Figure 20 is an isometric view of an air-cored resonator design that is appropriate for the float resonator shown in Figure 13a. The float 2120 is a tube of non-magnetic preferably non-conducting material, for example plastic or glass, has length 1 and has an inside diameter large enough to fit over the support 1305 and spiral windings 1313 and 1315 shown in Figure 13a. A coil of wire 2114 is wound around the outside of the float 2120 in such a manner that its magnetic axis is directed radially with respect to the float 2120. In this embodiment this is achieved by winding a first portion 2114a of the coil 2114 around the float in a first plane set at a first angle to the plane of the tubing itself, and then winding a second portion 2114b of the coil 2114 around the float 2120 in a second different plane set at a second angle to the plane of the tubing itself such that the combined effect of the two portions 2114a and 2114b of the coil 2114 results in a coil having a radial axis. A capacitor (not shown) will be connected to the two ends of coil 2114 to form a resonant circuit with the coil 2114.

[0077] In some applications however a low float length 1 will be a prerequisite. In such an embodiment, the design shown in Figure 20 will not be appropriate, and an alternate design like the one shown in Figure 21 will be required. In particular, Figure 21 shows in plan a flat disc-like float 2220 again having an inside diameter large enough to fit over the support 1305 and spiral windings 1313 and 1315 shown in Figure 13a. Two portions 2214a and 2214b of a coil 2214 are mounted on the float 2220 in the manner shown such that the axis of the coil 2214 is radial with respect to the float 2220. The ends of the coil 2214 are connected to a capacitor 2217 thereby forming a resonant circuit. The coil portions 2214a and 2214b are preferably wound around ferrite rods 2281 and 2283 as this concentrates the magnetic field produced by the coil 2214 when the resonant circuit is resonating.

[0078] In the above embodiments, the axis of the resonant circuit was assumed to be fixed. However, in some applications, such as fluid flow meters, the resonant circuit may rotate. Figure 22 shows how one form of the transducer of the present invention can be used in a fluid flow rate sensor. Fluid is passed upwardly through a vertical pipe 2385 made of non-magnetic preferably non-conducting material that is intemally tapered as shown. The vertical position taken up by a float 2320 depends upon the rate of fluid flow. Figure 23a shows in more detail the float 2320 shown in Figure 22. Within the float 2320 there is a resonant circuit 2410 whose axis is horizonal. However the float 2320 which

in this instance is generally conical tends to rotate in the fluid flow, so that the axis 2421 of the resonant circuit 2410 will change. Accordingly the signal from the transducer will for a given height vary with time. In the present embodiment, the float 2320 remains vertical due to its generally conical shape and it only rotates about its vertical axis. When the circuit 2410 is resonating and when the float is rotating, the EMF induced in both spiral windings on the transducer will be amplitude modulated by cosθ where θ is the angular orientation of the float and is zero when the axis 2421 of the circuit 2410 is perpendicular to the surface of the support 2305. However, the effect of the rotation on the induced signals can be removed by the ratiometric calculation performed in equation 13 above since the EMF induced in both spiral windings is affected by the same modulation. Therefore, the rotation of the float 2320 about a vertical axis will not hinder the determination of its vertical position. However, if for any reason the float stops rotating when the axis of the resonant circuit is orthogonal to the surface of the support 2305, i.e. when θ = 90° or 270°, then the height cannot be determined since there is no longer any coupling between the resonant circuit 2410 and the spiral windings(not shown).

[0079] Figure 23b shows how the float 2320 shown in Figure 23a may be modified to solve the above problem. In Figure 23b the float 2320 has resonant circuits 241 0a and 2410b having horizontal but perpendicular axis and each preferably having a different resonant frequency f_1 and f_2. Therefore, in this embodiment, there will always be an output signal in the spiral windings (not shown) due to the magnetic field from at least one of the resonant circuits, from which the height of the float can be determined regardless of the angular orientation thereof.

[0080] Additionally, as those skilled in the art will realise, it is also possible to determine the angular orientation θ of the float 2220 from the signals generated in any of the spiral windings. This will be evident to those skilled in the art since the signal induced in one spiral winding due to one resonant circuit (after demodulation and filtering) is given by:

$$\tilde{V}^{f1} = S(x,y)\cos\theta \qquad (18)$$

and the signal induced in the same spiral winding due to the other resonant circuit (after demodulation and filtering)is be given by:

$$\tilde{V}^{f2} = S(x,y)\sin\theta \qquad (19)$$

[0081] Therefore, the angular orientation θ can be calculated from an inverse tangent function of the ratio $\tilde{V}^{f1}/\tilde{V}^{f2}$. Furthermore, the rotation rate of the float can also be determined by tracking θ as it changes. This is advantageous since the rotation rate also depends on the fluid flow rate.

[0082] Figure 23c shows in cross-section an alternative solution to this problem. In particular, Figure 23c shows the pipe 2385 through which-the fluid flows, the float 2320 within the pipe 2385 and two supports 2405a and 2405b lying in orthogonal planes adjacent to the pipe 2385, each having a set of spiral windings (not shown) mounted thereon. In this embodiment, only a single horizontal axis resonant circuit (not shown) is mounted in the float 2320. As those skilled in the art will realise, there will always be an output signal from the spiral windings on at least one of the supports, and therefore the height of the float can always be determined regardless of the angular orientation thereof. As in the embodiment shown in Figure 23b, it will also be possible to determine the angular orientation of the float 2320 as well. However, as those skilled in the art will realise, in this embodiment signals from the two supports 2405a and 2405b will have to be used to determine the angular orientation.

[0083] In the above embodiments describing a fluid flow rate sensor, the float was specially designed to rotate only about a vertical axis. Figure 23d shows another embodiment of a fluid flow rate sensor where the float 2420 is spherical, and can therefore rotate about any axis. In this embodiment, a single set of spiral windings (not shown) are mounted on a support 2305 adjacent the pipe 2385. The float 2420 is free to float within the pipe 2385 which is tapered as before, and it contains three resonant circuits 2410a, 2410b and 2410c having orthogonal axes and preferably having different resonant frequencies. In this embodiment, there will always be some coupling between at least one of the resonant circuits 2410a, 2410b or 2410c within the float 2420 and the set of spiral windings (not shown). Therefore, the height of the float 2420 can always be determined irrespective of its angular orientation. Furthermore, it may also be possible to determine the rotation rate of the float 2420 about its axes since the signals induced in the spiral windings (not shown) at the three resonant frequencies will depend upon the rotation rate of the float 2420 about the axis of the corresponding resonant circuit.

[0084] One of the major advantages of the spiral sensing system over existing fluid flow rate sensors (which use a magnetic float and a magnetic tracking device) is that it does not exert any force on the float. Therefore, the system is more accurate than the existing fluid flow rate sensing systems. Furthermore, by measuring both float height and rotation rate there is a increased dynamic range over which accurate flow indication is possible.

[0085] In the embodiment illustrated in Figure 13a it was assumed that the float 1320 could not rotate about a vertical

axis. However, if the float 1320 can rotate, then to ensure that the resonant circuit will always be excited irrespective of the angular orientation of the float, either two orthogonal excitation coils and one horizontal axis resonator has to be provided or a single excitation coil and two horizontal but orthogonal axes resonant circuits must be provided so that the angular orientation of the float can be determined. The angular orientation of the float must be determined so that a suitable correction of the indicated position can be made.

[0086] Figure 24 illustrates how two orthogonal excitation loops 2516a and 2516b can be mounted around the support 1305 used in the liquid level sensing system shown in Figure 13a. The two excitation coils 2516a and 2516b need not lie in orthogonal planes but it is preferred since it simplifies the processing required to determine the position and angular orientation of the float 13 shown in Figure 13a.

[0087] Figures 25a and 25b show a further form of the windings and resonant circuit. In Figure 25a a support 2605 carries windings 2653, 2655 and 2657 disposed in a three phase arrangement. The associated resonant circuit 2610 shows coils 2614 disposed in a spiral arrangement so as to form a balanced resonant circuit with a multiplicity of loops extending along the measurement direction. This multi-loop arrangement has the advantage of averaging the signal over a number of windings and thereby minimising errors due to defects in the manufacture of the windings 2653, 2655 and 2657.

[0088] Figure 26 shows one of the windings that would be used in a two dimensional position encoder employing the spiral windings embodying the present invention. In particular, Figure 26 shows a spiral winding 2815 whose density of coils varies in a sinusoidal manner along the x axis of Figure 26. As a result, the sensitivity of winding 2815 to a near source of magnetic field will vary in a sinusoidal manner with distance x. A phase quadrature spiral winding (not shown) will also be required whose density of coils varies in a sinusoidal manner with distance along the x axis. This provides a one dimensional linear displacement device. However, if a further set of phase quadrature windings are provided superimposed over the winding 2815 and the corresponding quadrature winding (not shown), whose winding densities vary in a sinusoidal manner per unit distance in the y direction, then a two dimensional transducer is provided. For clarity, in Figure 26 some of the windings are not shown. Figure 26 also shows a resonant circuit 2810 whose position can vary in the x and y direction. If an excitation coil (not shown) is provided to excite the resonator 2810 then the position of the resonator in the x and y direction with respect to the origin O can be determined from the signals induced in the four spiral windings in the manner described above.

[0089] The inventors have also established that by careful design of the resonant circuit, it is possible to reduce (within limits) the apparent effect of resonant circuit tilt. Figure 27a schematically shows a coil of wire 2914 having axis 2921 that forms part of the resonant circuit that is mounted on the movable member (not shown). Figure 27a also shows the support 2905 upon which the spiral windings (not shown) are mounted. The system is designed to output the position of the resonant circuit along the length of the support. If the resonant circuit tilts, i.e. the axis 2921 of the resonant circuit is displaced through T radians, the position encoder should output the position as being at point 2988. However, through experimentation the inventors have established that this is not the case. In fact the position encoder indicates that the resonant circuit is adjacent point 2989 which is approximately halfway between the actual position 2987 and the expected position 2988. This means that the resonant circuit appears to be at point 2990 and appears to move along an apparent measurement plane 2992 which is different from the actual plane 2991 in which the resonant circuit lies. Furthermore, the inventors have discovered that by using a resonant circuit comprising two coil portions connected in series and spatially separated along the measurement direction it is possible to move the apparent plane of measurement 2992 away or towards the support 2905. This has important implications in applications such as ink jet printer head position sensing where it may be impossible to place the coils in the required measurement plane because of space restrictions.

[0090] Figure 27b shows an embodiment where the resonator comprises two electrically connected coils and where the distance between the respective axis 2921 is 2D. The two coils are fixed to the movable object such that if the movable object tilts then the two resonant circuits will tilt about point 2982. The inventors have established that they can vary the apparent plane of measurement 2992 as illustrated by arrow 2993 by changing the distance 2D between the coils 2914a and 2914b. Preferably, the distance between the two coils is not an exact multiple of the winding period. In one experiment, (i) each coil portion 2914a and 2914b comprised forty turns of 0.2mm copper wire wound around a ferrite bobbin having 8mm square section and 18mm length; (ii) a suitable capacitor was chosen to make the resonant circuit resonate at 150KHz; (ii) an actual separation of 25mm between the centre of the coils and the surface of the support 2905 was chosen; (iv) a spiral period of 50mm pitch and 20mm peak to peak was used; and (v) a separation between the coils (i.e. 2D) of 116mm was used. The results obtained show that the effective plane of measurement 2992 was located 120mm above the track and the position indicated by the position encoder system is point 2987 to within $\pm$ 0.4mm with angular changes of upto $\pm 4°$. For the same angular changes and a single coil, the position encoder indicates point 2987 to within $\pm$8mm. This represents an accuracy improvement of a factor 20. In a second experiment with a similar set up, but with a separation (2D) between the coils of 100mm the apparent plane of the measurement 2992 system was found to be 10mm above the track. In a third experiment with a similar set up but with a separation (2D) of 96mm the apparent plane of measurement 2992 was found to be on the surface of the support 2905. Therefore,

in an ink jet printer application where the nozzle from which ink is projected on to the paper is liable to tilt, it would be advantageous if the apparent plane of measurement were to be made equal to the plane of the paper. This may be achieved by selecting a suitable separation D. With this arrangement, the accuracy of the system is increased since on the apparent plane of measurement the position does not change much for small changes in tilt.

[0091] Figure 28a shows one way in which the spiral windings shown in Figure 2 may be modified to produce a transducer suitable for use in a radius encoder. In particular, Figure 28a shows a winding 3013 that starts at point 3008a and winds in a clockwise spiral until point 3008b where it changes direction and winds in the reverse direction until point 3008c where it changes again etc. Therefore, with this configuration the winding 3013 has a sinusoidal magnetic sensitivity function that varies as a function of radius. In other words, the winding has a "multipole" magnetic detection pattern in any radial direction. A second quadrature spiral winding 3015 will also be required but only the start of it is shown for clarity. The operation of this embodiment is similar to the operation of the linear embodiments and will not be described again.

[0092] Figure 28b shows a modification of the spiral transducer system shown in Figure 28a. In particular, in the arrangement of Figure 28b each part of a winding completes several revolutions before changing direction. Furthermore, the winding density of the windings between the change in directions is made to vary such that the magnetic sensitivity of the winding is sinusoidal in any radial direction.

[0093] If the movable element can only move along the x-axis shown in Figure 28b then only a linear encoder is required. In such an embodiment, it is possible to modify the windings by motionally cutting them along the dotted lines 3081 and 3083 and connecting corresponding parts of the windings that are left. Figure 29 shows the resulting winding pattern if this is done. In particular, the winding density of the winding 3113 varies in a sinusoidal fashion with distance along the length of the support 3105. The dotted lines generally indicated by reference numeral 3185 represent the connections to corresponding parts of the winding. There will also be a quadrature winding, but for clarity this is not shown.

[0094] The transducer of the present invention may be applied to a number of applications. The embodiments have already described use of the transducer in applications such as lift position control, liquid level detection and fluid flow rate detection. Other applications include valve position sensing, positioning of the print head in a printer, graphic pen input devices, cranes, throttle rotation sensor, ABS rotation sensors, shock absorber/ride height sensors and warehouse position sensing tracks.

Claims

1. A position detector including:

   first and second members (5, 1) mounted for relative movement along a measuring path;
   said first member (5) comprising a first circuit (55) having at least two loops (A, B) arranged in succession along said measuring path, each loop extending along said path and said loops being connected in series and being arranged so that EMFs induced in adjacent said loops by a common background alternating magnetic field (23) oppose each other, and a second circuit (53) extending along said measuring path;
   said second member (1) comprising means (10) for interacting with said circuits, such that in response to an input driving signal being applied to said second circuit there is induced in said first circuit an output signal, said interacting means and said at least two loops of said first circuit being arranged so that said output signal continuously varies as a function of their relative position along said path; and
   drive means (41) arranged to apply an input driving signal to said second circuit (53);

   wherein said second circuit (53) comprises at least two loops (A, B) arranged in succession along said measuring path, each loop extending along said path and the loops being connected in series and being arranged so that EMFs induced in adjacent said loops by a common background alternating magnetic field (23) oppose each other, and wherein said interacting means (10) comprises an electromagnetic resonant device (14, 17) arranged so that, in operation, an intermediate signal (I_r) is induced therein by said input driving signal applied to said second circuit and so that said intermediate signal induces said output signal in said first circuit.

2. A position detector according to claim 1, wherein said loops are constituted by opposed sinusoidal convolutions of conductor.

3. A position detector according to any preceding claim, wherein said first member comprises a plurality of said first circuits (55, 57) which are electrically separate from each other and are located one on the other, and wherein the plurality of loops of the respective first circuits are spatially separated along said path.

4. A position detector according to any preceding claim, further comprising a second electromagnetic resonant device (10b) provided separate from and at a fixed distance along said path from the first electromagnetic resonant device (10a), and wherein the spatial separation between the two electromagnetic resonant devices (10a, 10b) is such that the output signal induced in said first circuit by said first electromagnetic resonant device (10a) is in phase quadrature with the output signal induced in the first circuit by said second electromagnetic resonant device (10b).

5. A position detector according to any preceding claim, comprising a plurality of said electromagnetic resonant devices (1710a, 1710b), each having a different respective resonant frequency and being arranged such that in operation, each electromagnetic resonant device (1710a, 1710b) induces an alternating signal at the corresponding resonant frequency in said first circuit whose amplitude varies with its position relative to the loops of said first circuit.

6. A position detector according to any preceding claim, further comprising processing means (33) for processing the signal induced in said first circuit and for providing an indication therefrom of the relative position of said first and second members.

7. A position detector according to claim 6, wherein said drive means (41) is operable to apply a pulse of said driving signal during a first time interval and wherein said processing means (33) is operable to process said induced signal during a subsequent second time interval after said first time interval.

8. A position detector according to claim 6 or 7, wherein said processing means (33) comprises a demodulator (27) which is matched to the phase of the signal induced in said first circuit by said resonant device.

9. A position detector according to any of claims 6 to 8, wherein said first member comprises two or more of said first circuits, wherein the loops of the respective first circuits are spatially separated along said path and wherein said processing means (33) is operable to perform a trigonometric ratio calculation of the signals induced in said two or more first circuits.

10. A position detector according to any preceding claim, wherein said output signal induced in said first circuit varies sinusoidally as a function of the position along said path of said resonant device relative to said at least two loops, and wherein one period (T_s) of said sinusoidal variation corresponds to a relative movement of the extent of two of said series connected loops.

11. A position detector according to any preceding claim, wherein said electromagnetic resonant device comprises a coil (14) and a capacitor (17).

12. A position detector according to any preceding claim, wherein the loops of said first circuit are carried on a substantially planar surface of said first member (5).

13. A position detector according to claim 12 when dependent upon claim 11, wherein the axis of the coil (14) is generally perpendicular to said planar surface of said first member (5).

14. A position detector according to claim 13, wherein said first circuit (13) comprises more than two of said loops which are arranged in succession over said path, and wherein said coil (2614) comprises a number of similar loops to those of said first circuit (13), which loops extend over the measurement path and are arranged such that when the resonant device is resonating, the output signal induced in said first circuit represents an average position of said resonant device (10) relative to said first circuit (13) over a number of the loops of said first circuit.

15. A position detector including:

first and second members (5, 1) which are relatively movable along a measuring path;
said first member (5) comprising: (i) a first circuit (2815) having a plurality of loop portions which cross said path and which are connected together to form first and second sets of loops (A, B) arranged in succession along said measuring path, each loop extending along said path and said loops being connected in series and being arranged so that EMFs induced in loops of the same set by a common background alternating magnetic field (23) add together and so that EMFs induced in the first set of loops by a common background alternating magnetic field (23) oppose the EMFs induced in the adjacent second set of loops; and (ii) a second circuit (16) extending along said measuring path;
said second member (1) comprising means (2810) for interacting with said circuits, such that in response to

an input driving signal applied to one of said circuits there is induced in the other said circuit an output signal, said interacting means and said first and second sets of loops being arranged so that said output signal continuously varies as a function of their relative position along said path;

wherein said interacting means (10) comprises an electromagnetic resonant device (14, 17) arranged so that, in operation, an intermediate signal (I_r) is induced therein by said input driving signal applied to said one circuit and so that said intermediate signal induces said output signal in said other circuit; and wherein the loop portions which cross said path in each set of loops are arranged with decreasing and increasing density along said measuring path so that the magnetic sensitivity of the circuit is sinusoidal.

16. A position detector according to claim 15, wherein said loops have a generally square shape.

17. A position detector according to claim 15 or 16, wherein said electromagnetic resonant device comprises a coil (14) and a capacitor (17).

18. A position detector according to any of claims 15 to 17, wherein the loops of said first circuit are carried on a substantially planar surface of said first member (5).

19. A position detector according to claim 18 when dependent upon claim 17, wherein the axis of the coil (14) is generally perpendicular to said planar surface of said first member (5).

20. A position detector including:

first and second members (5,1) mounted for relative movement along a measuring path;
said first member (5) comprising a printed circuit board carrying a plurality of conductor tracks on at least two layers of the board, which tracks are arranged on the board and appropriate ones of which are connected together through the board at a plurality of via holes, to form a first circuit (13) which extends along said measuring path and a second circuit (16) which extends along said measuring path;

wherein said first circuit comprises at least two loops (A, B) arranged in succession along said measuring path, each loop extending along said path and said loops being connected in series and being arranged so that EMFs induced in adjacent said loops by a common background alternating magnetic field (23) oppose each other;
said second member (1) comprising means (10) for interacting with said circuits, such that in response to an input driving signal applied to one of said circuits there is induced in the other said circuit an output signal, said interacting means and said at least two loops being arranged so that said output signal continuously varies as a function of their relative position along said path;
wherein said interacting means (10) comprises an electromagnetic resonant device (14, 17) arranged so that, in operation, an intermediate signal (I_r) is induced therein by said input driving signal applied to said one circuit and so that said intermediate signal induces said output signal in said other circuit;
wherein said via holes are grouped in first and second groups which are transversely spaced relative to said measuring path and wherein said loops are formed by a plurality of said conductor tracks each of which extends between a respective via hole in the first group and a respective via hole in the second group.

21. A position detector according to claim 20, wherein said loops are constituted by opposed sinusoidal convolutions of conductor.

22. A position detector according to any of claims 15 to 21, wherein said first member comprises a plurality of said first circuits (13, 15) which are electrically separate from each other and are located one on the other, and wherein the plurality of loops of the respective first circuits are spatially separated along said path.

23. A position detector according to claim 22, wherein said first member comprises two of said first circuits (13, 15), and wherein the loops of the respective first circuits are spatially separated along said path by half the extent (T_s/2) of each of said loops.

24. A position detector according to any of claims 15 to 23, comprising a plurality of said electromagnetic resonant devices (1710a, 1710b), each having a different respective resonant frequency and being arranged such that in operation, each electromagnetic resonant device (1710a, 1710b) induces an alternating signal at the corresponding resonant frequency in said other circuit whose amplitude varies with its position relative to the loops of said first

circuit.

25. A position detector according to any of claims 15 to 24, further comprising a drive means (41) for applying said input driving signal to one of said first and second circuits and processing means (33) for processing the signal induced in said other circuit and for providing an indication therefrom of the relative position of said first and second members.

26. A position detector according to claim 25, wherein said drive means is operable to apply said input drive signal to said second circuit (16).

27. A position detector according to claim 25 or 26, wherein said drive means (41) is operable to apply a pulse of said driving signal during a first time interval and wherein said processing means (33) is operable to process said induced signal during a subsequent second time interval after said first time interval.

28. A position detector according to any of claims 25 to 27, wherein said processing means (33) comprises a demodulator (27) which is matched to the phase of the signal induced in said other circuit by said resonant device.

29. A position detector according to any of claims 25 to 28, wherein said first member comprises two or more of said first circuits, wherein the loops of the respective first circuits are spatially separated along said path and wherein said processing means (33) is operable to perform a trigonometric ratio calculation of the signals induced in said two or more first circuits.

30. A position detector according to any of claims 15 to 29, wherein said output signal induced in said other circuit varies sinusoidally as a function of the position along said path of said resonant device relative to said at least two loops, and wherein one period (T_s) of said sinusoidal variation corresponds to a relative movement of the extent of two of said series connected loops.

31. A position detector according to any of claims 20 to 30, wherein said electromagnetic resonant device comprises a coil (14) and a capacitor (17).

32. A position detector according to claim 31, wherein the axis of the coil (14) is generally perpendicular to the surface of said printed circuit board which carries the conductor tracks that form said first and second circuits.

33. A position detector according to claim 32, wherein said resonant device (10) comprises at least two series connected coils (2914a, 2914b) separated from one another in said path by a distance which can be varied to reduce the effect of tilt.

34. A position detector according to any preceding claim, wherein said first circuit comprises more than two of said loops which are arranged in succession along said path.

35. A position detector according to any preceding claim, wherein said resonant device comprises a coil (14), a capacitor (17) and a quartz or ceramic type resonator connected in series with said coil and capacitor.

36. A position detector according to any preceding claim, wherein said first member (5) is fixed and wherein said second member (1) is movable with respect to said first member.

37. A position detector according to claim 36, wherein said first and second circuits lie in substantially the same plane, and wherein said resonant device (10) is movable relative to said first and second circuits in a plane which is substantially parallel to the plane in which said first and second circuits lie.

38. A position detector according to any preceding claim, wherein said measuring path is linear.

39. A lift comprising a lift (1) and a lift shaft (3) and a position detector according to any of claims 1 to 38 for determining the position of the lift (1) within the lift shaft (3).

40. A liquid level sensor comprising a float (1320), a support (1305) on or in which the float is slidably guided and a position detector according to any of claims 1 to 38 for indicating the relative position of said float (1320) and said support (1305).

41. A fluid flow meter comprising a tapered tube (2385) and a float (2320) in the tube that is displaced in a longitudinal position determined by the flow of fluid and a detector according to any of claims 1 to 38 for indicating the relative position of the float (2320) and the tube (2385).

42. A fluid flow meter according to claim 41, wherein the float can rotate and carries a plurality of electromagnetic resonant devices (2410a, 2410b, 2410c), each comprising a coil and a capacitor, and wherein the axis of the coils of the plurality of resonant devices are orthogonal to each other.

43. A fluid flow meter according to claim 42, wherein the float can rotate and wherein two substantially planar first circuits are provided in mutually perpendicular planes.

44. A position detector including:

first and second members mounted for relative movement along a measuring path;
said first member comprising a first circuit (1913) having at least two loops arranged in succession along said measuring path, each loop extending along said path and said loops being connected in series and being arranged so that EMFs induced in adjacent said loops by a common background alternating magnetic field oppose each other, and a second circuit (1916) extending along said measuring path;
said second member comprising means (1901) for interacting with said circuits such that in response to an input alternating drive signal applied to one of said first and second circuits there is induced in the other circuit an output alternating signal which varies as a function of the position along said path of said interacting means relative to said at least two loops of said first circuit;

wherein said interacting means comprises an electromagnetic harmonic generator arranged so that, in operation, in response to said alternating drive signal, said harmonic generator induces said alternating output signal in said other circuit, and wherein the frequency of the induced signal is different to that of the drive signal.

Patentansprüche

1. Positionsdetektor mit:

einem ersten und einem zweiten Element (5, 1), die für eine Relativbewegung entlang eines Meßweges montiert sind,
wobei das erste Element (5) eine erste Schaltung (55) mit zumindest zwei Schleifen (A, B) aufweist, die aufeinanderfolgend entlang des Meßweges angeordnet sind, wobei jede Schleife sich entlang des Weges erstreckt und die Schleifen in Reihe geschaltet sind und so angeordnet sind, daß die in angrenzenden Schleifen durch ein gemeinsames magnetisches Hintergrundwechselfeld (23) induzierten elektromotorischen Kräfte einander entgegengesetzt sind, und eine zweite Schaltung (53), die sich entlang des Meßweges erstreckt,
wobei das zweite Element (1) Mittel (10) aufweist zum Wechselwirken mit den Schaltungen derart, daß in Abhängigkeit von einem Eingabetreibersignal, das an die zweite Schaltung angelegt wird, in der ersten Schaltung ein Ausgabesignal induziert wird, wobei die Wechselwirkungsmittel und die zumindest zwei Schleifen so angeordnet sind, daß das Ausgabesignal kontinuierlich als Funktion ihrer Relativposition entlang des Weges variiert, und
Treibermitteln (41), die ausgebildet sind, um ein Eingabetreibersignal an die zweite Schaltung (53) anzulegen, wobei die zweite Schaltung (53) zumindest zwei Schleifen (A, B) aufweist, die aufeinander folgend entlang des Meßwegs angeordnet sind, wobei jede Schleife sich entlang des Weges erstreckt und die Schleifen in Reihe geschaltet sind und so angeordnet sind, daß die in angrenzenden Schleifen durch ein gemeinsames magnetisches Hintergrundwechselfeld (23) induzierten elektromotorischen Kräfte einander entgegengesetzt sind, und

wobei die Wechselwirkungsmittel (10) eine elektromagnetische Resonanzvorrichtung (14, 17) aufweisen, die so angeordnet ist, daß im Betrieb ein Zwischensignal (I_r) darin durch das Eingabetreibersignal induziert wird, das an die zweite Schaltung angelegt wird, und so, daß das Zwischensignal das Ausgabesignal in der ersten Schaltung induziert.

2. Positionsdetektor nach Anspruch 1, wobei die Schleifen durch entgegengesetzt sinusförmige Abwicklungen von Leitern gebildet sind.

3. Positionsdetektor nach einem der vorstehenden Ansprüche, wobei das erste Element eine Anzahl der ersten Schaltungen (55, 57) aufweist, die elektrisch voneinander getrennt sind und aufeinander angeordnet sind, und wobei die Anzahl von Schleifen der jeweiligen ersten Schaltungen räumlich entlang des Weges voneinander getrennt sind.

4. Positionsdetektor nach einem der vorstehenden Ansprüche mit weiterhin einer zweiten elektromagnetischen Resonanzvorrichtung (10b), die separat von und in einem festen Abstand entlang des Weges von der ersten elektromagnetischen Resonanzvorrichtung (10a) angeordnet ist, und wobei die räumliche Trennung zwischen den beiden elektromagnetischen Resonanzvorrichtungen (10a, 10b) derart ist, daß das Ausgabesignal, das in der ersten Schaltung durch die erste elektromagnetische Resonanzvorrichtung (10a) induziert wird, in Phasenquadratur mit dem Ausgabesignal ist, das in der ersten Schaltung durch die zweite elektromagnetische Resonanzvorrichtung (10b) induziert wird.

5. Positionsdetektor nach einem der vorstehenden Ansprüche mit einer Anzahl der elektromagnetischen Resonanzvorrichtungen (1710a, 1710b), wobei jede eine unterschiedliche jeweilige Resonanzfrequenz aufweist und derart angeordnet ist, daß im Betrieb jede elektromagnetische Resonanzvorrichtung (1710a, 1710b) ein Wechselsignal bei der entsprechenden Resonanzfrequenz in der ersten Schaltung induziert, dessen Amplitude mit ihrer Position relativ zu den Schleifen der ersten Schaltung variiert.

6. Positionsdetektor nach einem der vorstehenden Ansprüche mit weiterhin einem Verarbeitungsmittel (33) zum Verarbeiten des Signals, das in der ersten Schaltung induziert wird, und zum Liefern einer Anzeige der Relativposition des ersten und des zweiten Elementes daraus.

7. Positionsdetektor nach Anspruch 6, wobei das Treibermittel (41) betreibbar ist, um einen Puls des Treibersignals während eines ersten Zeitintervalls anzulegen, und wobei das Verarbeitungsmittel (33) betreibbar ist, um das induzierte Signal während eines folgenden zweiten Zeitintervalls nach dem ersten Zeitinterval zu verarbeiten.

8. Positionsdetektor nach Anspruch 6 oder 7, wobei das Verarbeitungsmittel (33) einen Demodulator (27) aufweist, der an die Phase des in der ersten Schaltung durch die Resonanzvorrichtung induzierten Signals angepaßt ist.

9. Positionsdetektor nach einem der Ansprüche 6 bis 8, wobei das erste Element zwei oder mehr der ersten Schaltungen aufweist, wobei die Schleifen der jeweiligen ersten Schaltungen räumlich entlang des Weges getrennt sind und wobei das Verarbeitungsmittel (33) betreibbar ist, um eine Trigonemetrieverhältnis-Berechnung der Signale durchzuführen, die in den zwei oder mehr ersten Schaltungen induziert werden.

10. Positionsdetektor nach einem der vorstehenden Ansprüche, wobei das in der ersten Schaltung induzierte Ausgabesignal sinusförmig als Funktion der Position entlang des Weges der Resonanzvorrichtung relativ zü den zumindest zwei Schleifen variiert und wobei eine Periode (TS) der Sinusvariation einer Relativbewegung der Erstreckung von zwei der reihengeschalteten Schleifen entspricht.

11. Positionsdetektor nach einem der vorstehenden Ansprüche, wobei die elektromagnetische Resonanzvorrichtung eine Spule (14) und einen Kondensator (17) aufweist.

12. Positionsdetektor nach einem der vorstehenden Ansprüche, wobei die Schleifen der ersten Schaltung von einer im wesentlichen ebenen Fläche des ersten Elementes (5) getragen werden.

13. Positionsdetektor nach Anspruch 12, wenn von Anspruch 11 abhängig, wobei die Achse der Spule (14) im wesentlichen rechtwinkelig zur ebenen Fläche des ersten Elementes (15) ist.

14. Positionsdetektor nach Anspruch 13, wobei die erste Schaltung (13) mehr als zwei der Schleifen aufweist, die aufeinanderfolgend über den Weg angeordnet sind, und wobei die Spule (2614) eine Anzahl von den Schleifen der ersten Schaltung (13) gleichen Schleifen aufweist, wobei sich die Schleifen über den Meßweg erstrecken und so angeordnet sind, daß, wenn die Resonanzvorrichtung resonant schwingt, das in der ersten Schaltung induzierte Ausgabesignal eine mittlere Position der Resonanzvorrichtung (10) relativ zu der ersten Schaltung (13) über eine Anzahl der Schleifen der ersten Schaltungen wiedergibt.

15. Positionsdetektor mit:

einem ersten und einem zweiten Element (5, 1), die relativ entlang eines Meßweges bewegbar sind, wobei das erste Element (5) aufweist:

(i) eine erste Schaltung (2815) mit einer Anzahl von Schleifenteilen, die den Weg kreuzen und die miteinander zur Bildung eines ersten und eines zweiten Satzes von Schleifen (A, B) verbunden sind, die entlang des Meßweges angeordnet sind, wobei sich jede Schleife entlang des Weges erstreckt und die Schleifen in Reihe geschaltet und so angeordnet sind, daß die im selben Satz durch ein gemeinsames magnetisches Hintergrundwechselfeld (23) induzierten elektromotorischen Kräfte sich einander addieren, und so, daß die in dem ersten Satz von Schleifen durch ein gemeinsames magnetisches Hintergrundwechselfeld (23) induzierten elektromotorischen Kräfte den in dem angrenzenden zweiten Satz von Schleifen induzierten elektromotorischen Kräften entgegengesetzt sind, und
(ii) eine zweite Schaltung (16), die sich entlang des Meßwegs erstreckt,

wobei das zweite Element (1) Mittel (2810) aufweist zum Wechselwirken mit den Schaltungen derart, daß in Abhängigkeit von einem Eingabetreibersignal, das an eine der Schaltungen angelegt wird, in der anderen der Schaltungen ein Ausgangssignal induziert wird, wobei das Wechselwirkungsmittel und der erste und der zweite Satz von Schleifen so angeordnet sind, daß das Ausgangssignal kontinuierlich als Funktion ihrer Relativposition entlang des Weges variiert,

wobei das Wechselwirkungsmittel (10) eine elektromagnetische Resonanzvorrichtung (14, 17) aufweist, die so angeordnet ist, daß im Betrieb ein Zwischensignal (I_r) darin durch das Eingabetreibersignal induziert wird, das an eine der Schaltungen angelegt wird, und so, daß das Zwischensignal das Ausgangssignal in der anderen Schaltung induziert, und wobei die Schleifenteile in jedem Satz von Schleifen, die den Weg kreuzen, mit abnehmender und ansteigender Dichte entlang des Meßweges so angeordnet sind, daß die magnetische Empfindlichkeit der Schaltung sinusförmig ist.

16. Positionsdetektor nach Anspruch 15, wobei die Schleifen im wesentlichen quadratische Form aufweisen.

17. Positionsdetektor nach Anspruch 15 oder 16, wobei die elektromagnetische Resonanzvorrichtung eine Spule (14) und einen Kondensator (17) aufweist.

18. Positionsdetektor nach einem der Ansprüche 15 bis 17, wobei die Schleifen der ersten Schaltung auf einer im wesentlichen ebenen Oberfläche des ersten Elementes (5) getragen werden.

19. Positionsdetektor nach Anspruch 18, soweit von Anspruch 17 abhängig, wobei die Achse der Spule (14) im wesentlichen rechtwinklig zu der ebenen Oberfläche des ersten Elementes (5) ist.

20. Positionsdetektor mit:

einem ersten und einem zweiten Element (5, 1), die für eine Relativbewegung entlang eines Meßweges montiert sind,
wobei das erste Element (5) eine gedruckte Schaltungskarte aufweist, die eine Anzahl von Leitungsspuren aus zumindest zwei Schichten auf der Karte trägt, wobei die Spuren auf der Karte angeordnet sind und geeignete von ihnen über die Karte an einer Anzahl von Durchgangslöchern miteinander verbunden sind, um eine erste Schaltung (13) zu bilden, die sich entlang des Meßweges erstreckt, und eine zweite Schaltung (16), die sich entlang des Meßweges erstreckt,
wobei die erste Schaltung zumindest zwei Schleifen (A, B) aufweist, die aufeinander folgend entlang des Meßweges angeordnet sind,
wobei jede Schleife sich entlang des Weges erstreckt und die Schleifen in Reihe geschaltet sind und so angeordnet sind, daß in aneinandergrenzenden Schleifen durch ein gemeinsames magnetisches Hintergrundwechselfeld (23) induzierte elektromotorische Kräfte einander entgegengesetzt sind,
wobei das zweite Element (1) Mittel (10) aufweist, um mit den Schaltungen derart zu wechselwirken, daß in Abhängigkeit von einem Eingabetreibersignal, das einer der Schaltungen eingegeben wird, in der anderen Schaltung ein Ausgangssignal induziert wird, wobei das Wechselwirkungsmittel und die zumindest zwei Schleifen derart angeordnet sind, daß das Ausgangssignal als Funktion ihrer Relativposition entlang des Weges kontinuierlich variiert,

wobei das Wechselwirkungsmittel (10) eine elektromagnetische Resonanzvorrichtung (14, 17) aufweist, die so angeordnet ist, daß im Betrieb ein Zwischensignal (I_r) darin durch das Eingabetreibersignal, das der einen

Schaltung angelegt wird, induziert wird, und derart, daß das Zwischensignal das Ausgangssignal in der anderen Schaltung induziert, wobei die Durchgangslöcher in erste und zweite Gruppen gruppiert sind, die quer relativ zum Meßweg beabstandet sind, und wobei die Schleifen durch eine Anzahl der Leiterspuren gebildet sind, von denen sich jede zwischen einem jeweiligen Durchgangsloch in der ersten Gruppe und einem jeweiligen Durchgangsloch in der zweiten Gruppe erstreckt.

21. Positionsdetektor nach Anspruch 20, wobei die Schleifen durch entgegengesetzt sinusförmige Abwicklungen von Leitern gebildet sind.

22. Positionsdetektor nach Anspruch 20, wobei das erste Element eine Anzahl der ersten Schaltungen (13, 15) aufweist, die elektrisch voneinander getrennt sind und aufeinander angeordnet sind, und wobei die Anzahl von Schleifen der jeweiligen ersten Schaltungen räumlich entlang des Weges voneinander getrennt sind.

23. Positionsdetektor nach Anspruch 22, wobei das erste Element zwei der ersten Schaltungen (13, 15) aufweist und wobei die Schleifen der jeweiligen ersten Schaltungen räumlich entlang des Weges um die Hälfte der Erstreckung ($T_s/2$) jeder der Schleifen getrennt sind.

24. Positionsdetektor nach einem der Ansprüche 15 bis 23, mit einer Anzahl der elektromagnetischen Resonanzvorrichtungen (1710a, 1710b), wobei jede eine unterschiedliche jeweilige Resonanzfrequenz aufweist und derart angeordnet ist, daß im Betrieb jede elektromagnetische Resonanzvorrichtung (1710a, 1710b) ein Wechselsignal bei der entsprechenden Resonanzfrequenz in der anderen Schaltung induziert, dessen Amplitude mit ihrer Position relativ zu den Schleifen der ersten Schaltung variiert.

25. Positionsdetektor nach einem der Ansprüche 15 bis 24 mit weiterhin einem Treibermittel (41) zum Anlegen des Eingabetreibersignals an eine der ersten und zweiten Schaltungen und einem Verarbeitungsmittel (33) zum Verarbeiten des Signals, das in der anderen Schaltung induziert wird, und zum Liefern einer Anzeige der Relativposition des ersten und des zweiten Elementes daraus.

26. Positionsdetektor nach Anspruch 25, wobei das Treibermittel betreibbar ist, um das Eingabetreibersignal an die zweite Schaltung (16) anzulegen.

27. Positionsdetektor nach Anspruch 25 oder 26, wobei das Treibermittel (41) betreibbar ist, um einen Puls des Treibersignals während eines ersten Zeitintervalls anzulegen, und wobei das Verarbeitungsmittel (33) betreibbar ist, um das induzierte Signal während eines folgenden zweiten Zeitintervalls nach dem ersten Zeitinterval zu verarbeiten.

28. Positionsdetektor nach einem der Ansprüche 25 bis 27, wobei das Verarbeitungsmittel (33) einen Demodulator (27) aufweist, der an die Phase des in der anderen Schaltung durch die Resonanzvorrichtung induzierten Signals angepaßt ist.

29. Positionsdetektor nach einem der Ansprüche 25 bis 28, wobei das erste Element zwei oder mehr der ersten Schaltungen aufweist, wobei die Schleifen der jeweiligen ersten Schaltungen räumlich entlang des Weges getrennt sind und wobei das Verarbeitungsmittel (33) betreibbar ist, um eine Trigonemetrieverhältnis-Berechnung der Signale durchzuführen, die in den zwei oder mehr ersten Schaltungen induziert werden.

30. Positionsdetektor nach einem der Ansprüche 15 bis 29, wobei das in der anderen Schaltung induzierte Ausgabesignal sinusförmig als Funktion der Position entlang des Weges der Resonanzvorrichtung relativ zu den zumindest zwei Schleifen variiert und wobei eine Periode (TS) der Sinusvariation einer Relativbewegung der Erstreckung von zwei der reihengeschalteten Schleifen entspricht.

31. Positionsdetektor nach einem der Ansprüche 20 bis 30, wobei die elektromagnetische Resonanzvorrichtung eine Spule (14) und einen Kondensator (17) aufweist.

32. Positionsdetektor nach Anspruch 31, wobei die Achse der Spule (14) im wesentlichen rechtwinklig zur Oberfläche der gedruckten Schaltungskarte ist, die die Leitungsspuren trägt, die die ersten und die zweiten Schaltungen bilden.

33. Positionsdetektor nach Anspruch 32, wobei die Resonanzvorrichtung (10) zumindest zwei reihengeschaltete Spulen (2914a, 2914b) aufweist, die voneinander auf dem Weg durch einen Abstand getrennt sind, der zum Reduzieren

der Auswirkung von Neigung variiert werden kann.

34. Positionsdetektor nach einem der vorstehenden Ansprüche, wobei die erste Schaltung mehr als zwei der Schleifen aufweist, die nacheinander entlang des Weges angeordnet sind.

35. Positionsdetektor nach einem der vorstehenden Ansprüche, wobei die Resonanzvorrichtung eine Spule (14), einen Kondensator (17) und einen Quarz- oder Keramikresonator aufweist, der in Reihe mit der Spule und dem Kondensator geschaltet ist.

36. Positionsdetektor nach einem der vorstehenden Ansprüche, wobei das erste Element (5) fixiert ist und wobei das zweite Element (1) mit Bezug auf das erste Element bewegbar ist.

37. Positionsdetektor nach Anspruch 36, wobei die erste und die zweite Schaltung im wesentlichen in der gleichen Ebene liegen und wobei die Resonanzvorrichtung (10) relativ zur ersten und zur zweiten Schaltung in einer Ebene bewegbar ist, die im wesentlichen parallel zu der Ebene liegt, in der die ersten und zweiten Schaltungen liegen.

38. Positionsdetektor nach einem der vorstehenden Ansprüche, wobei der Meßweg linear ist.

39. Aufzug mit einer Aufzugkabine (1) und einem Aufzugschacht (3) und einem Positionsdetektor nach einem der Ansprüche 1 bis 38 zum Feststellen der Position der Aufzugkabine (1) innerhalb des Aufzugschachts (3).

40. Flüssigkeitspegelsensor mit einem Schwimmer (1320), einem Träger (1305), auf dem oder in dem der Schwimmer verschiebbar geführt ist, und einem Positionsdetektor nach einem der Ansprüche 1 bis 38 zum Anzeigen der Relativposition des Schwimmers (1320) und des Träger (1305).

41. Fluidflußmesser mit einem verjüngtem Rohr (2385) und einem Schwimmer (2320) in dem Rohr, der in einer Längsposition verschoben ist, die durch den Fluß des Fluids bestimmt ist, und einem Detektor nach einem der Ansprüche 1 bis 38 zum Anzeigen der Relativposition des Schwimmers (2320) und des Rohrs (2385).

42. Fluidflußmesser nach Anspruch 41, wobei der Schwimmer sich drehen kann und eine Anzahl von elektromagnetischen Resonanzvorrichtungen (2410a, 2410b, 2410c) trägt, wobei jede eine Spule und einen Kondensator aufweist und wobei die Achsen der Spulen der Anzahl von Resonanzvorrichtungen rechtwinkelig zueinander stehen.

43. Fluidflußmesser nach Anspruch 42, wobei der Schwimmer sich drehen kann und wobei zwei im wesentlichen ebene erste Schaltungen in gegenseitig rechtwinkligen Ebenen liegen.

44. Positionsdetektor mit:

einem ersten und einem zweiten Element, die für eine Relativbewegung entlang eines Meßweges montiert sind,
wobei das erste Element eine erste Schaltung (1913) aufweist, mit zumindest zwei Schleifen, die aufeinanderfolgend entlang des Meßweges angeordnet sind, wobei jede Schleife sich entlang des Weges erstreckt und die Schleifen in Reihe geschaltet sind und so angeordnet sind, daß die in angrenzenden Schleifen durch ein gemeinsames magnetisches Hintergrundwechselfeld induzierten elektromotorischen Kräfte einander entgegengesetzt sind, und eine zweite Schaltung (1916), die sich entlang des Meßweges erstreckt,
wobei das zweite Element Mittel (1901) aufweist, zum Wechselwirken mit den Schaltungen derart, daß in Abhängigkeit von einem Eingabetreiberwechselsignal, das an eine der ersten und zweiten Schaltungen angelegt wird, ein Ausgabewechselsignal in der anderen Schaltung induziert wird, das als Funktion der Position der Wechselwirkungsmittel entlang des Weges relativ zu den zumindest zwei Schleifen der ersten Schaltung variiert,

wobei die Wechselwirkungsmittel einen elektromagnetischen Harmonischen-Generator aufweisen, der derart angeordnet ist, daß im Betrieb in Abhängigkeit von dem Treiberwechselsignal der Harmonischen-Generator das Ausgabewechselsignal in der anderen Schaltung induziert, und wobei die Frequenz des induzierten Signals sich von der des Treibersignals unterscheidet.

Revendications

1. Un capteur de position comprenant:

des premier et deuxième organes (5, 1) montés pour subir un déplacement relatif le long d'un chemin de mesure;
ledit premier organe (5) comprenant un premier circuit (13) muni d'au moins deux boucles (A, B) disposées en succession le long dudit chemin de mesure, chaque boucle s'étendant le long dudit chemin et lesdites boucles étant reliées en série et étant agencées de telle façon que les forces électromotrices induites dans lesdites boucles adjacentes par un champ magnétique alternatif commun d'arrière-plan (23) s'opposent l'une à l'autre, et un deuxième circuit (16) s'étendant le long dudit chemin de mesure;
ledit deuxième organe (1) comprenant les moyens (10) pour réaliser une interaction avec lesdits circuits, de telle façon qu'en réponse à un signal d'attaque d'entrée appliqué à l'un desdits circuits, on induise dans l'autre desdits circuits un signal de sortie, lesdits moyens d'interaction et lesdites au moins deux boucles étant agencés de telle façon que ledit signal de sortie varie en continu en fonction de leur position relative le long dudit chemin;
des moyens de commande (41) pour appliquer un signal de commande d'entrée audit deuxième circuit (53);

dans lequel ledit deuxième circuit (53) comprend au moins deux boucles (A, B) disposées en succession le long dudit chemin de mesure, chaque boucle s'étendant le long dudit chemin et lesdites boucles étant reliées en série et étant agencées de telle façon que les forces électromotrices induites dans lesdites boucles adjacentes par un champ magnétique alternatif commun d'arrière-plan (23) s'opposent l'une à l'autre, et dans lequel lesdits moyens d'interaction (10) comprennent un dispositif électromagnétique résonant (14, 17) agencé de telle façon que, en service, un signal intermédiaire (I_r) soit induit dans ce dispositif par ledit signal d'attaque d'entrée appliqué audit deuxième circuit, et de telle façon que ledit signal intermédiaire induise ledit signal de sortie dans ledit premier circuit

2. Un capteur de position selon la revendication 1, dans lequel lesdites boucles sont constituées par des convolutions sinusoïdales de conducteur.

3. Un capteur de position selon l'une quelconque des revendications précédentes, dans lequel ledit premier organe comporte une pluralité desdits premiers circuits (55, 57) qui sont électriquement séparés l'un de l'autre et sont disposés l'un au-dessus de l'autre, et dans lequel la pluralité de boucles des premiers circuits respectifs sont spatialement séparées le long dudit chemin.

4. Un capteur de position selon l'une quelconque des revendications précédentes, comportant en outre un deuxième dispositif électromagnétique résonant (10b) prévu séparé dudit chemin et à une distance fixe le long dudit chemin du premier dispositif électromagnétique résonant (10a), et dans lequel la séparation spatiale entre les deux dispositifs électromagnétiques résonants (10a, 10b) est telle que le signal de sortie induit dans ledit autre circuit par ledit premier dispositif électromagnétique résonant (10a) est en quadrature de phase avec le signal de sortie induit dans l'autre circuit par ledit deuxième dispositif électromagnétique résonant (10b).

5. Un capteur de position selon l'une quelconque des revendications 15 à 23, comprenant une pluralité desdits dispositifs électromagnétiques résonants (1710a, 1710b), présentant chacun une fréquence de résonance respective différente et étant agencé de telle façon, qu'en service, chaque dispositif électromagnétique résonant (1710a, 1710b) induise un signal alternatif à la fréquence de résonance correspondante dans ledit autre circuit dont l'amplitude varie en fonction de sa position relative par rapport aux boucles dudit premier circuit.

6. Un capteur de position selon l'une quelconque des revendications précédentes, comprenant en outre des moyens de traitement (33) pour traiter le signal induit dans ledit autre circuit et pour fournir une indication à ce sujet de la position relative desdits premier et deuxième organes.

7. Un capteur de position selon la revendication 6, dans lequel lesdits moyens de commande (41) sont susceptibles de fonctionner pour appliquer une impulsion dudit signal de commande pendant un premier intervalle de temps, et dans lequel lesdits moyens de traitement (33) sont susceptibles de fonctionner pour traiter ledit signal induit pendant un deuxième intervalle de temps subséquent après ledit premier intervalle de temps.

8. Un capteur de position selon la revendications 6 ou 7, dans lequel lesdits moyens de traitement (33) comprennent

un démodulateur (27) qui est accordé à la phase du signal induit dans ledit autre circuit par ledit dispositif résonant.

9. Un capteur de position selon l'une quelconque des revendications 6 à 8, dans lequel ledit premier organe comporte au moins deux desdits premiers circuits, dans lequel les boucles des premiers circuits respectifs sont spatialement séparées le long dudit chemin, et dans lequel lesdits moyens de traitement (33) sont susceptibles de fonctionner pour réaliser un calcul de rapport trigonométrique des signaux induits dans lesdits au moins deux premiers circuits.

10. Un capteur de position selon l'une quelconque des revendications précédentes, dans lequel ledit signal de sortie induit dans ledit premier circuit varie de manière sinusoïdale en fonction de la position le long dudit chemin dudit dispositif résonant par rapport auxdites au moins deux boucles, et dans lequel une période (T_s) de ladite variation sinusoïdale correspond à un déplacement relatif de l'étendue de deux desdites boucles reliées en série.

11. Un capteur de position selon l'une quelconque des revendications précédentes, dans lequel ledit dispositif électromagnétique résonant, comprend une bobine (14) et un condensateur (17).

12. Un capteur de position selon l'une quelconque des revendications précédentes, dans lequel les boucles dudit premier circuit sont portées sur une surface sensiblement plane dudit premier organe (5).

13. Un capteur de position selon la revendication 12 lorsqu'elle dédend de la revendication 11, dans lequel l'axe de la bobine (14) est de manière générale perpendiculaire à la surface plane dudit premier organe (5).

14. Un capteur de position selon la revendication 13, dans lequel ledit premier circuit (13) comprend plus de deux desdites boucles qui sont agencées en succession sur ledit chemin, et dans lequel ladite bobine (2614) comprend un certain nombre de boucles similaires à celles dudit premier circuit (13), lesquelles boucles s'étendent sur le chemin mesuré et sont agencées de telle façon que lorsque le dispositif résonant est effectivement résonant, le signal de sortie induit dans ledit autre circuit représente une position moyenne dudit dispositif résonant (10) par rapport audit premier circuit (13), sur un certain nombre des boucles dudit premier circuit.

15. Un capteur de position comprenant:

des premier et deuxième organes (5, 1) montés pour subir un déplacement relatif le long d'un chemin de mesure;
ledit premier organe (5) comprenant un premier circuit (2815) présentant une pluralité de parties en boucle traversant ledit chemin et qui sont reliées ensemble pour constituer un premier et un deuxième jeu de boucles (A, B) disposées en succession le long dudit chemin de mesure, chaque boucle s'étendant le long dudit chemin et lesdites boucles étant reliées en série et étant agencées de telle façon que les forces électromotrices induites dans des boucles du même jeu par un champ magnétique alternatif commun d'arrière-plan (23) s'additionnent et de telle façon que les forces électromotrices induites dans le premier jeu de boucles par un champ magnétique alternatif commun d'arrière-plan (23) s'opposent aux forces électromotrices induites dans le deuxième jeu adjacent de boucles, et un deuxième circuit (16) s'étendant le long dudit chemin de mesure;
ledit deuxième organe (1) comprenant les moyens (2810) pour réaliser une interaction avec lesdits circuits, de telle façon qu'en réponse à un signal d'attaque d'entrée appliqué à l'un desdits circuits, on induise dans l'autre desdits circuits un signal de sortie, lesdits moyens d'interaction et lesdites au moins deux boucles étant agencés de telle façon que ledit signal de sortie varie en continu en fonction de leur position relative le long dudit chemin;

dans lequel lesdits moyens d'interaction (10) comprennent un dispositif électromagnétique résonant (14, 17) agencé de telle façon que, en service, un signal intermédiaire (I_r) soit induit dans ce dispositif par ledit signal d'attaque d'entrée appliqué audit un circuit, et de telle façon que ledit signal intermédiaire induise ledit signal de sortie dans ledit autre circui,

et dans lequel les parties de boucle qui traversent ledit chemin dans chaque jeu de boucles sont agencées le long dudit chemin de mesure avec une densité qui diminue et qui augment, de sorte que la sensitivité magnétique du circuit soit sinusoïdale.

16. Un capteur de position selon la revendication 15, dans lequel lesdites boucles présentent une forme générale carrée.

17. Un capteur de position selon la revendication 15 ou 16, dans lequel ledit dispositif électromagnétique résonant

comprend une bobine (14) et un condensateur (17).

18. Un capteur de position selon l'une quelconque des revendications 15 à 17, dans lequel les boucles dudit premier circuit sont portées sur une surface sensiblement plane dudit premier organe (5).

19. Un capteur de position selon la revendication 18, en dépendance de la revendication 17, dans lequel l'axe de la bobine (14) est de manière générale perpendiculaire à ladite surface plane dudit premier organe (5).

20. Un capteur de position comprenant:

des premier et deuxième organes (5, 1) montés pour subir un déplacement relatif le long d'un chemin de mesure;
ledit premier organe (5) comprenant une carte à circuit imprime présentant une pluralité de pistes conductrices sur au moins deux couches de la carte, les psites étant agencées sur la carte et les pistes concernées étant reliées ensemble à travers la carte au niveau d'une pluralité de trous de traversée, pour constituer un premier circuit (13) qui s'étend le long dudit chemin et un deuxième circuit (16) qui s'étend le long dudit chemin de mesure;
dans lequel ledit premier circuit comprend au moins deux boucles (A, B) disposées en succession le long dudit chemin de mesure, chaque boucle s'étendant le long dudit chemin et lesdites boucles étant reliées en série et étant agencées de telle façon que les forces électromotrices induites dans lesdites boucles adjacentes par un champ magnétique alternatif commun d'arrière-plan (23) s'opposent l'une à l'autre,
ledit deuxième organe (1) comprenant les moyens (10) pour réaliser une interaction avec lesdits circuits, de telle façon qu'en réponse à un signal d'attaque d'entrée appliqué à l'un desdits circuits, on induise dans l'autre desdits circuits un signal de sortie, lesdits moyens d'interaction et lesdites au moins deux boucles étant agencés de telle façon que ledit signal de sortie varie en continu en fonction de leur position relative le long dudit chemin;
dans lequel lesdits moyens d'interaction (10) comprennent un dispositif électromagnétique résonant (14, 17) agencé de telle façon que, en service, un signal intermédiaire (I_r) soit induit dans ce dispositif par ledit signal d'attaque d'entrée appliqué audit un circuit, et de telle façon que ledit signal intermédiaire induise ledit signal de sortie dans ledit autre circuit, dans lequel lesdits trous de traversée sont groupés selon des premiers et des deuxièmes groupes, espacés transversalement par rapport audit chemin de mesure, et dans lequel lesdites boucles sont constituées d'une pluralité desdites pistes conductrices dont chacune s'étend entre un trou de traversée respectif dudit premier groupe et un trou de traversée respectif dudit deuxième groupe.

21. Un capteur de position selon la revendication 20, dans lequel lesdites boucles sont constituées par des convolutions sinusoïdales de conducteur.

22. Un capteur de position selon l'une quelconque des revendications 15 à 21, dans lequel ledit premier organe comprend une pluralité desdits premiers circuits (13, 15) qui sont électriquement séparés l'un de l'autre et sont disposés l'un au-dessus de l'autre, et dans lequel la pluralité de boucles des premiers circuits respectifs sont spatialement séparées le long dudit chemin.

23. Un capteur de position selon la revendication 6, dans lequel ledit premier organe comprend deux desdits premiers circuits (13, 15), et dans lequel les boucles des premiers circuits respectifs sont spatialement séparées le long dudit chemin de la moitié de l'étendue ($T_s/2$) de chacune desdites boucles.

24. Un capteur de position selon l'une quelconque des revendications 15 à 23, comprenant une pluralité desdits dispositifs électromagnétiques résonants (1710a, 1710b), présentant chacun une fréquence de résonance respective différente et étant agencé de telle façon, qu'en service, chaque dispositif électromagnétique résonant (1710a, 1710b) induise un signal alternatif à la fréquence de résonance correspondante dans ledit autre circuit dont l'amplitude varie en fonction de sa position relative par rapport aux boucles dudit premier circuit.

25. Un capteur de position selon l'une quelconque des revendications 15 à 24, comprenant en outre des moyens de commande (41) pour appliquer ledit signal de commande d'entrée à l'un desdits premier et deuxième circuits et des moyens de traitement (33) pour traiter le signal induit dans ledit autre circuit et pour fournir une indication à ce sujet de la position relative desdits premier et deuxième organes.

26. Un capteur de position selon la revendication 25, dans lequel lesdits moyens de commande sont susceptibles de

fonctionner pour appliquer ledit signal de commande d'entrée audit deuxième circuit (16).

27. Un capteur de position selon la revendication 25 ou 26, dans lequel lesdits moyens de commande (41) sont susceptibles de fonctionner pour appliquer une impulsion dudit signal de commande pendant un premier intervalle de temps, et dans lequel lesdits moyens de traitement (33) sont susceptibles de fonctionner pour traiter ledit signal induit pendant un deuxième intervalle de temps subséquent après ledit premier intervalle de temps.

28. Un capteur de position selon l'une quelconque des revendications 25 à 27, dans lequel lesdits moyens de traitement (33) comportent un démodulateur (27) qui est accordé à la phase du signal induit dans ledit autre circuit par ledit dispositif résonant.

29. Un capteur de position selon l'une quelconque des revendications 25 à 28, dans lequel ledit premier organe comprend au moins deux desdits premiers circuits, dans lequel les boucles des premiers circuits respectifs sont spatialement séparées le long dudit chemin, et dans lequel lesdits moyens de traitement (33) sont susceptibles de fonctionner pour réaliser un calcul de rapport trigonométrique des signaux induits dans lesdits au moins deux premiers circuits.

30. Un capteur de position selon l'une quelconque des revendications précédentes, dans lequel ledit signal de sortie induit dans ledit autre circuit varie dé manière sinusoïdale en fonction de la position le long dudit chemin dudit dispositif résonant par rapport auxdites au moins deux boucles, et dans lequel une période (T_s) de ladite variation sinusoïdale correspond à un déplacement relatif de l'étendue de deux desdites boucles reliées en série.

31. Un capteur de position selon l'une quelconque des revendications 20 à 30, dans lequel ledit dispositif électromagnétique résonant, comprend une bobine (14) et un condensateur (17).

32. Un capteur de position selon la revendication 31, dans lequel l'axe de la bobine (14) est de manière générale perpendiculaire à la surface de ladite carte à circuit imprimé qui porte les pistes conductrices formant lesdits premiers et deuxièmes circuits.

33. Un capteur de position selon la revendication 32, dans lequel ledit dispositif résonant (10) comprend au moins deux bobines reliées en série (2914a, 2914b) séparées l'une de l'autre sur ledit chemin d'une distance qui peut varier pour réduire l'effet de balancement.

34. Un capteur de position selon l'une quelconque des revendications précédentes, dans lequel ledit premier circuit comprend plus de deux desdites boucles qui sont agencées en succession le long dudit chemin.

35. Un capteur de position selon l'une quelconque des revendications précédentes, dans lequel ledit dispositif résonant comprend une bobine (14), un condensateur ou un conducteur (17) et un résonateur du type à quartz ou céramique relié en série à ladite bobine et audit condensateur.

36. Un capteur de position selon l'une quelconque des revendications précédentes, dans lequel ledit premier organe (5) est fixe, et dans lequel ledit deuxième organe (1) est mobile par rapport audit premier organe.

37. Un capteur de position selon la revendication 36, dans lequel lesdits premier et deuxième circuits se trouvent sensiblement dans le même plan, et dans lequel ledit dispositif résonant (10) est mobile par rapport auxdits premier et deuxième circuits dans un plan qui est sensiblement parallèle au plan dans lequel se trouvent lesdits premier et deuxième circuits.

38. Un capteur de position selon l'une quelconque des revendications précédentes, dans lequel ledit chemin de mesure est linéaire.

39. Un ascenseur comprenant un ascenseur proprement dit (1) et un puits d'ascenseur (3), et un capteur de position selon l'une quelconque des revendications 1 à 31, pour déterminer la position de l'ascenseur (1) à l'intérieur du puits d'ascenseur.

40. Un capteur de niveau de liquide comprenant un flotteur (1320), un support (1305) sur ou dans lequel le flotteur est susceptible de coulisser en étant guidé et un capteur de position selon l'une quelconque des revendications 1 à 31 ou 33, pour indiquer la position relative dudit flotteur (1320) et dudit support (1305).

41. Un organe de mesure de débit de fluide comprenant un tube conique (2385) et un flotteur (2320) dans le tube qui est déplacé dans une position longitudinale déterminée par le débit de fluide, et un capteur selon l'une quelconque des revendications 1 à 31 ou 33 pour indiquer la position relative du flotteur (2320) et du tube (2385).

42. Un organe de mesure de débit de fluide selon la revendication 41, dans lequel le flotteur peut tourner et porte une pluralité de dispositifs électromagnétiques résonants (2410a, 2410b, 2410c) comprenant chacun une bobine et un condensateur, et dans lequel les axes des bobines de la pluralité de dispositifs orthogonaux sont octogonaux l'un à l'autre.

43. Un organe de mesure de débit de fluide selon la revendication 42, dans lequel le flotteur peut tourner, et dans lequel deux premiers circuits sensiblement plans sont prévus dans des plans mutuellement perpendiculaires.

44. Un capteur de position comprenant:

des premier et deuxième organes montés pour subir un déplacement relatif le long d'un chemin de mesure;
ledit premier organe comportant un premier circuit (1913) présentant au moins deux boucles agencées en succession le long dudit chemin de mesure, chaque boucle s'étendant le long dudit chemin et lesdites boucles étant reliées en série et étant agencées de telle façon que les forces électromotrices induites dans lesdites boucles adjacentes par un champ magnétique alternatif commun d'arrière-plan s'opposent l'une à l'autre, et un deuxième circuit (1916) s'étendant le long dudit chemin de mesure;
ledit deuxième organe comprenant des moyens (1901) pour réaliser une interaction avec lesdits circuits, de telle façon qu'en réponse à un signal d'attaque alternatif d'entrée appliqué à l'un desdits premier et deuxième circuits, soit induit dans l'autre circuit un signal de sortie alternatif qui varie en fonction de la position le long dudit chemin desdits moyens d'interaction relativement auxdites au moins deux boucles dudit premier circuit;

dans lequel lesdits moyens d'interaction comprennent un générateur électromagnétique harmonique, agencé de telle façon que, en service, en réponse audit signal d'attaque alternatif, ledit générateur harmonique induise ledit signal de sortie alternatif dans ledit autre circuit, et dans lequel la fréquence du signal induit soit différente de celle du signal d'attaque.

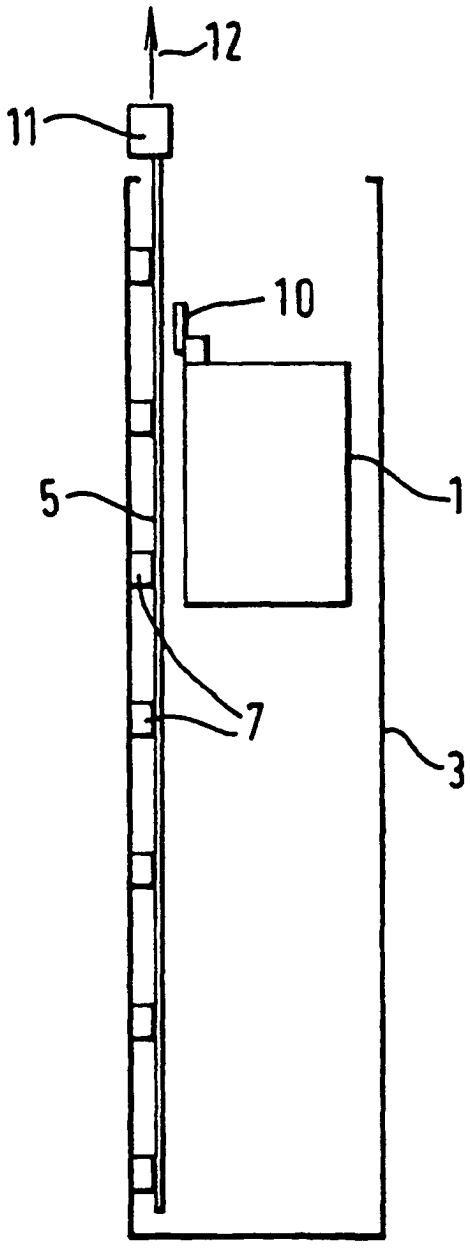

FIG. 1

FIG. 2a

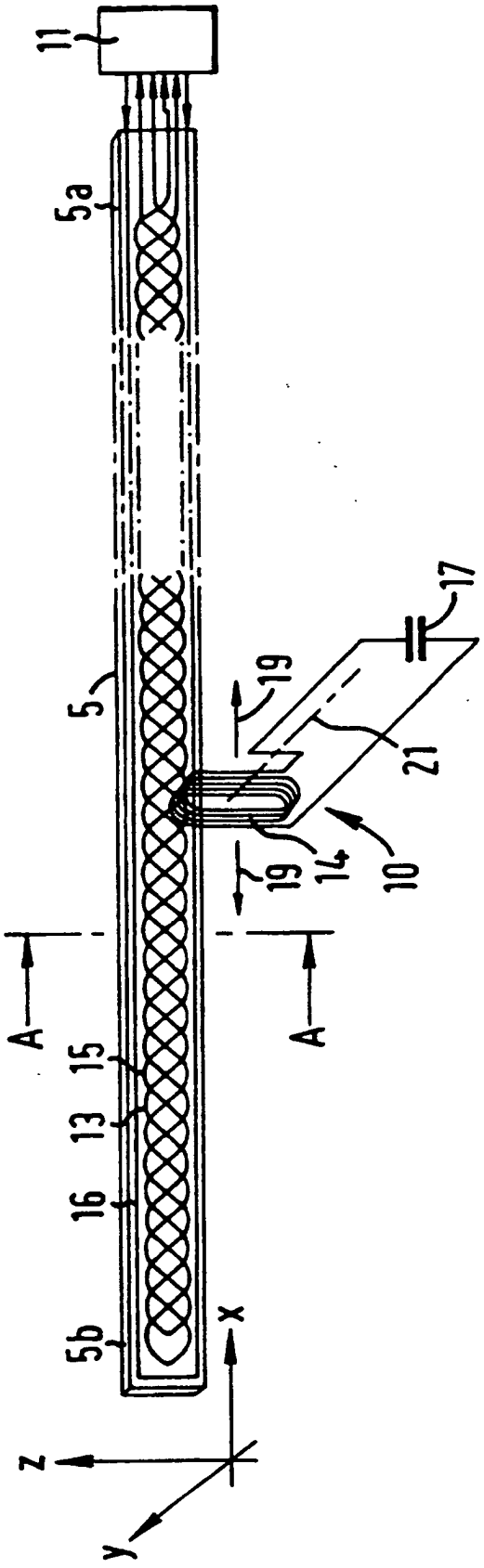

FIG. 2b

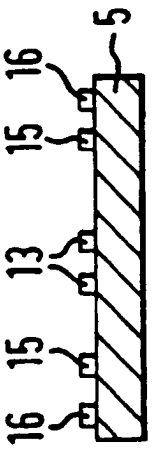

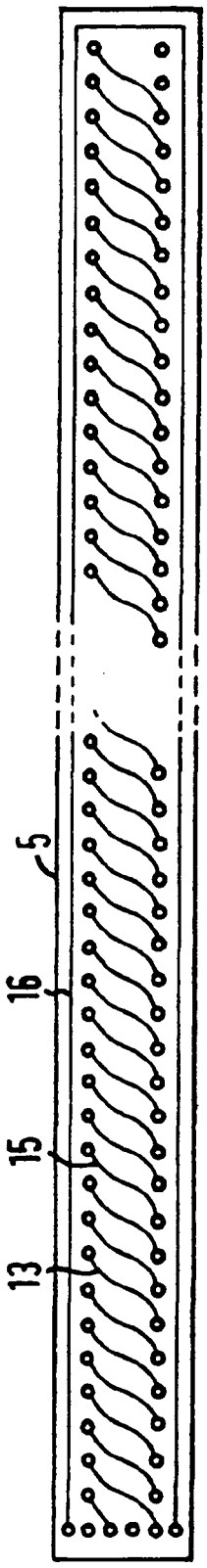

FIG. 2c

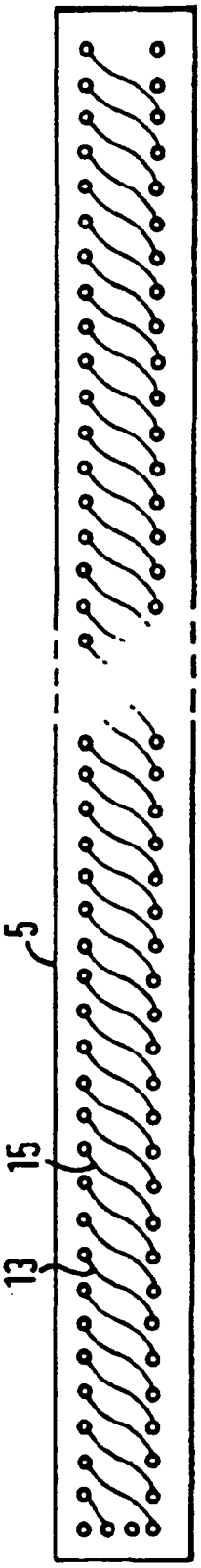

FIG. 2d

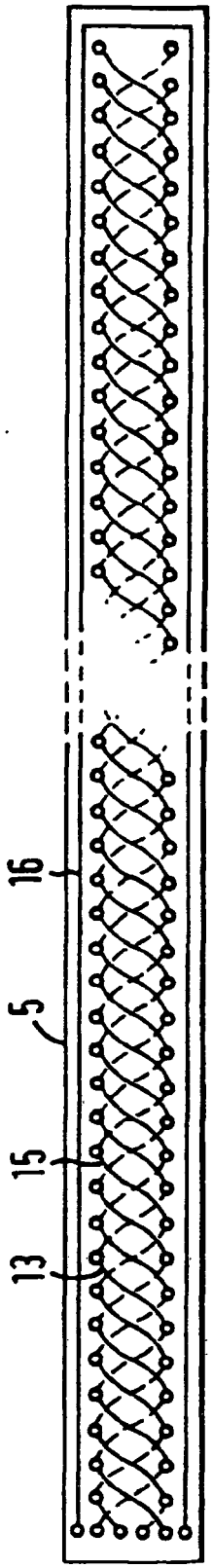

FIG. 2e

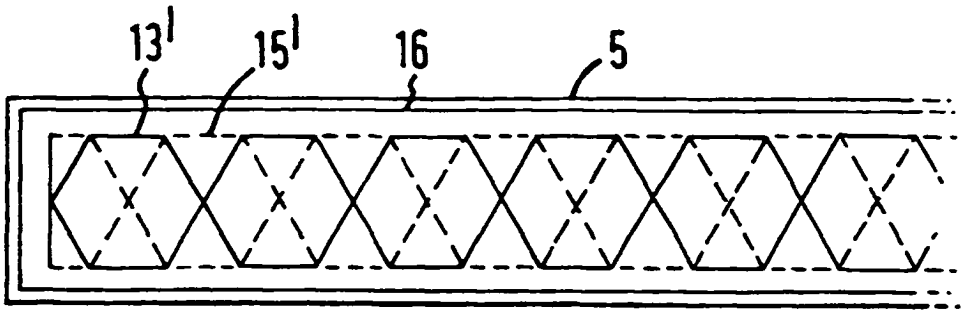

FIG. 2f

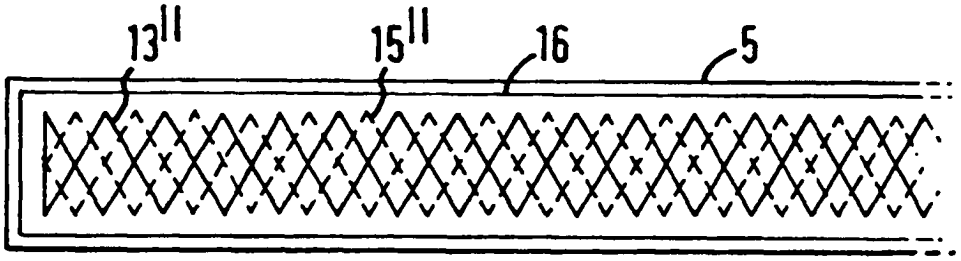

FIG. 2g

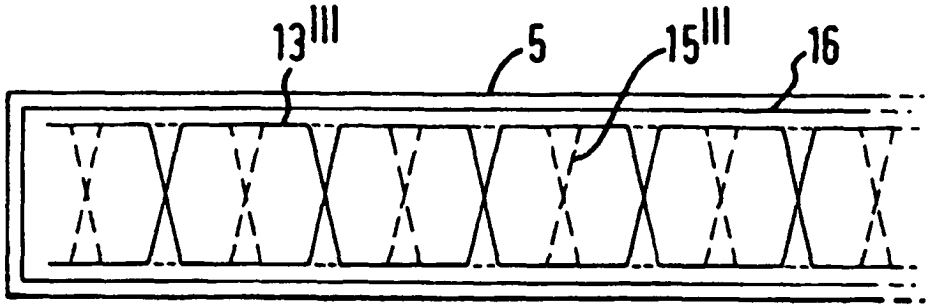

FIG. 2h

FIG.3

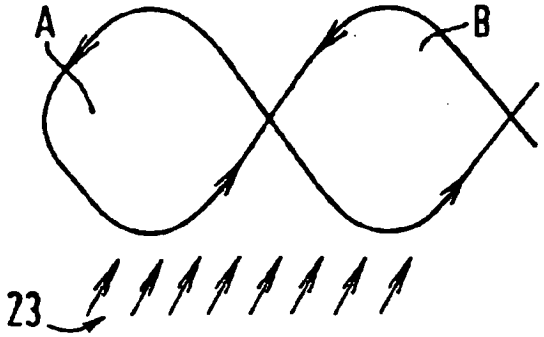
A
B
23

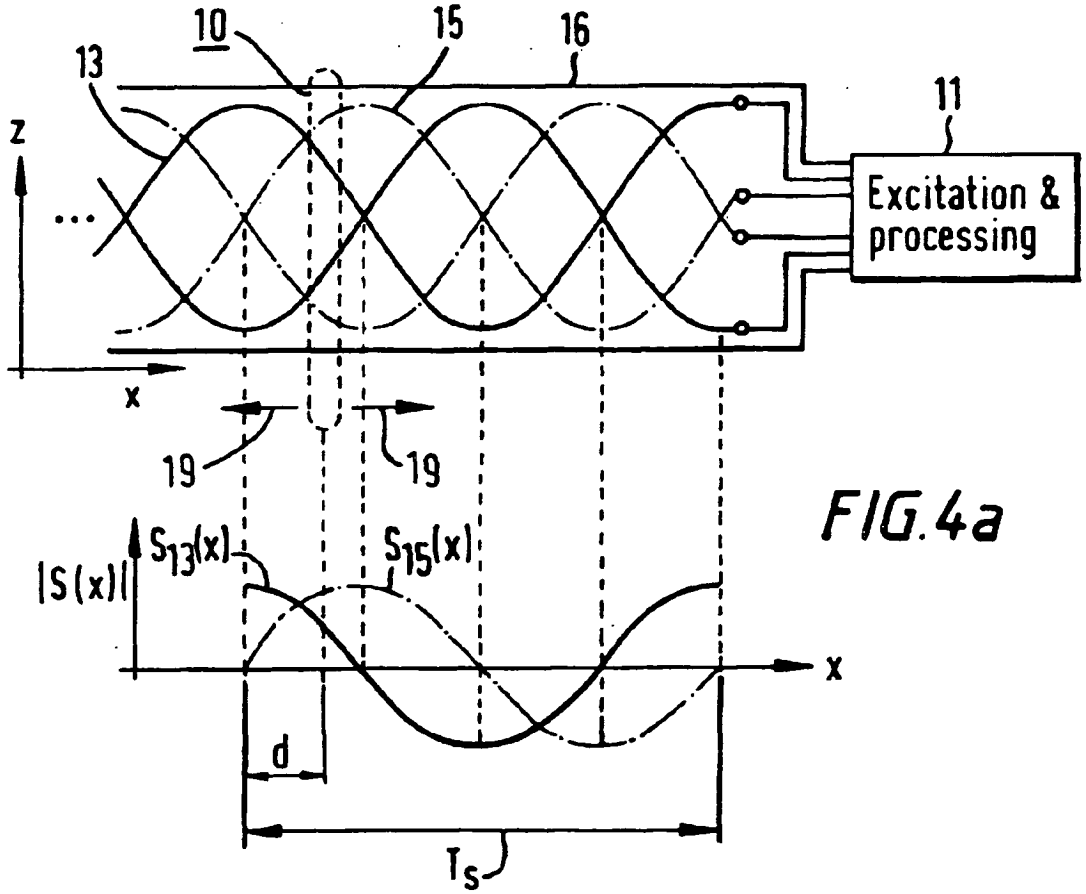
10
15
16
13
11
z
x
Excitation &
processing
19
19
|S(x)|
S13(x)
S15(x)
x
d
Ts

FIG.4a

FIG. 4b

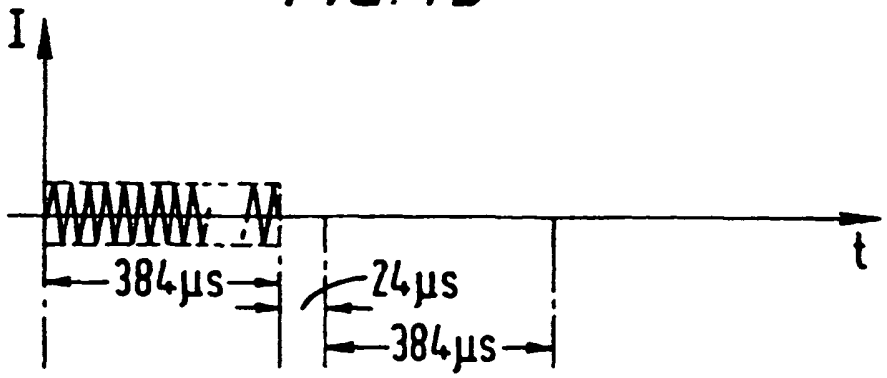

FIG. 4c

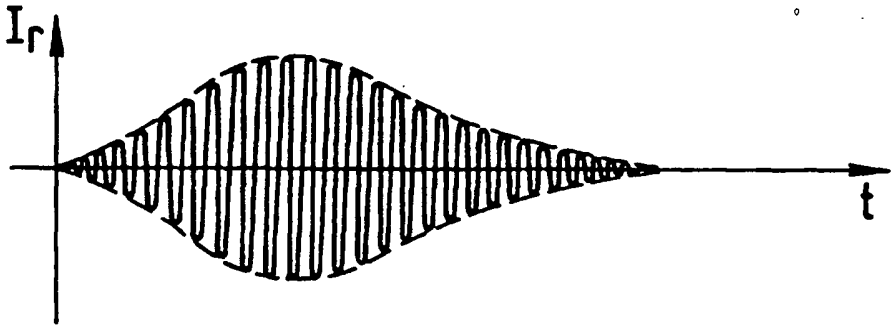

FIG. 5a

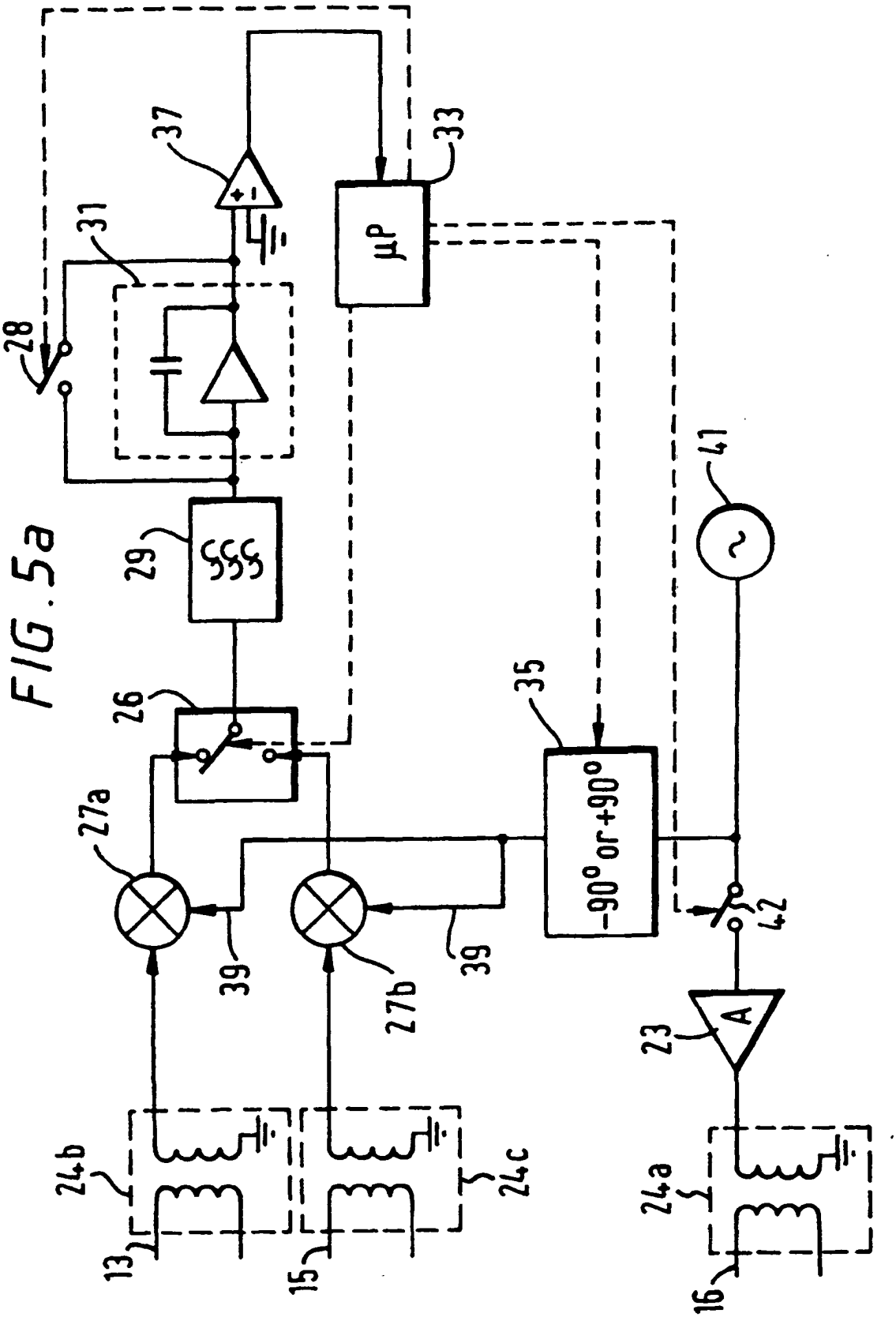
37
33
μP
31
28
29
41
26
35
27a
-90° or +90°
42
39
39
27b
23
A
24b
24c
24a
13
15
16

FIG. 5b

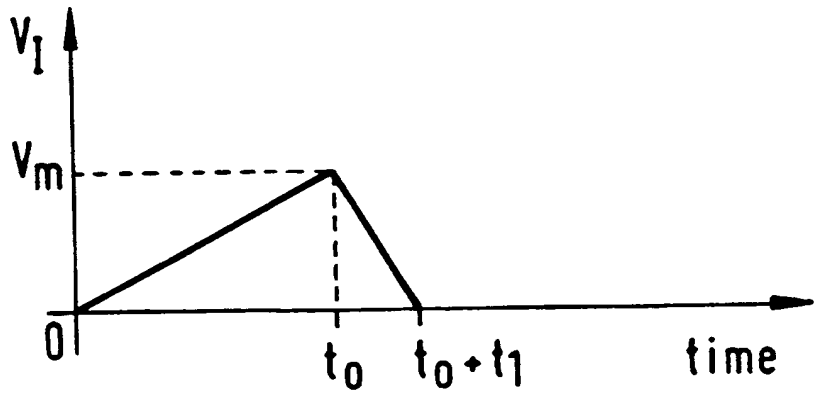

FIG. 6a

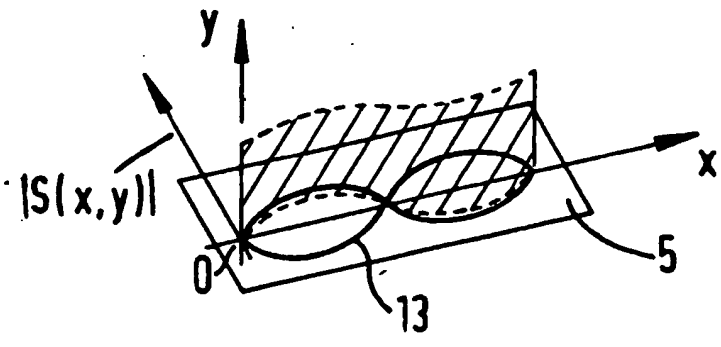

FIG. 6b

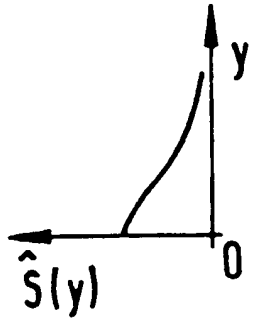

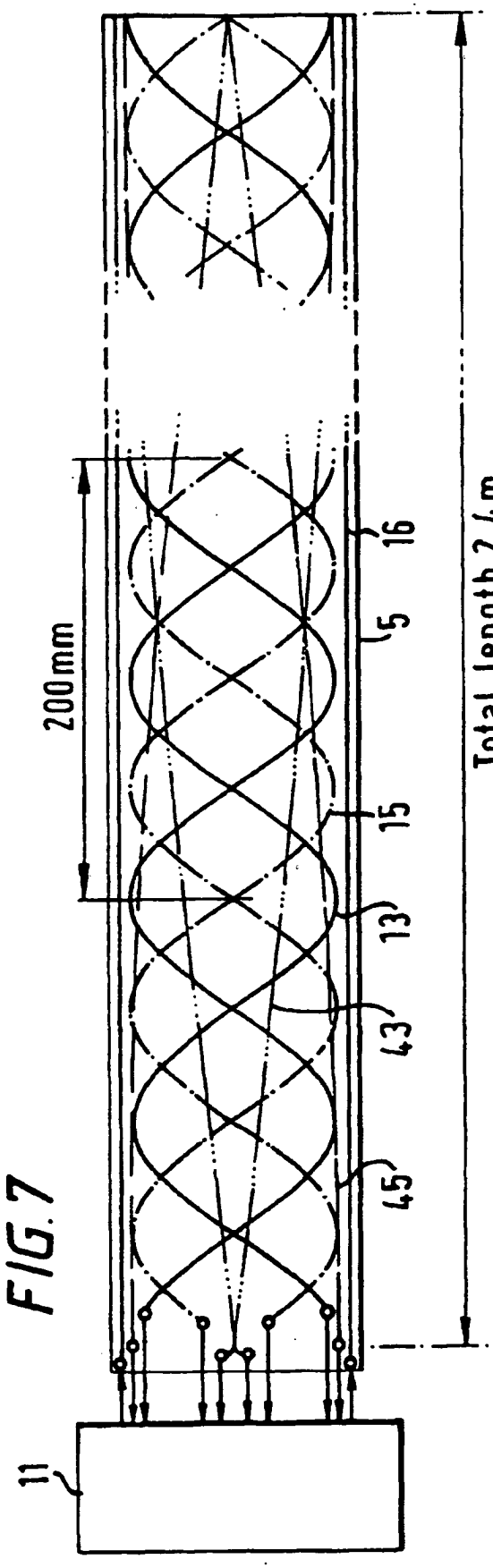
11
200mm
Total length 2.4m
16
5
15
13
43
45

FIG.7

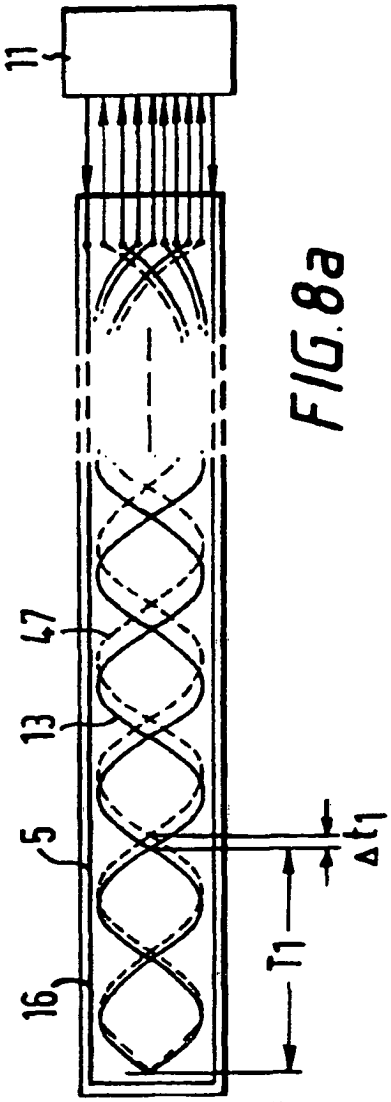
11
47
13
5
16
Δt_1
T_1

FIG.8a

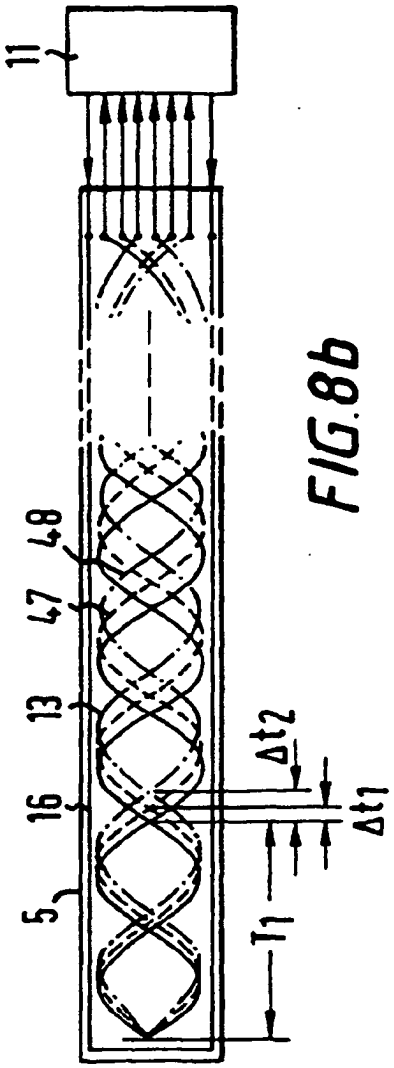
11
48
47
13
16
5
Δt2
Δt1
T1

FIG.8b

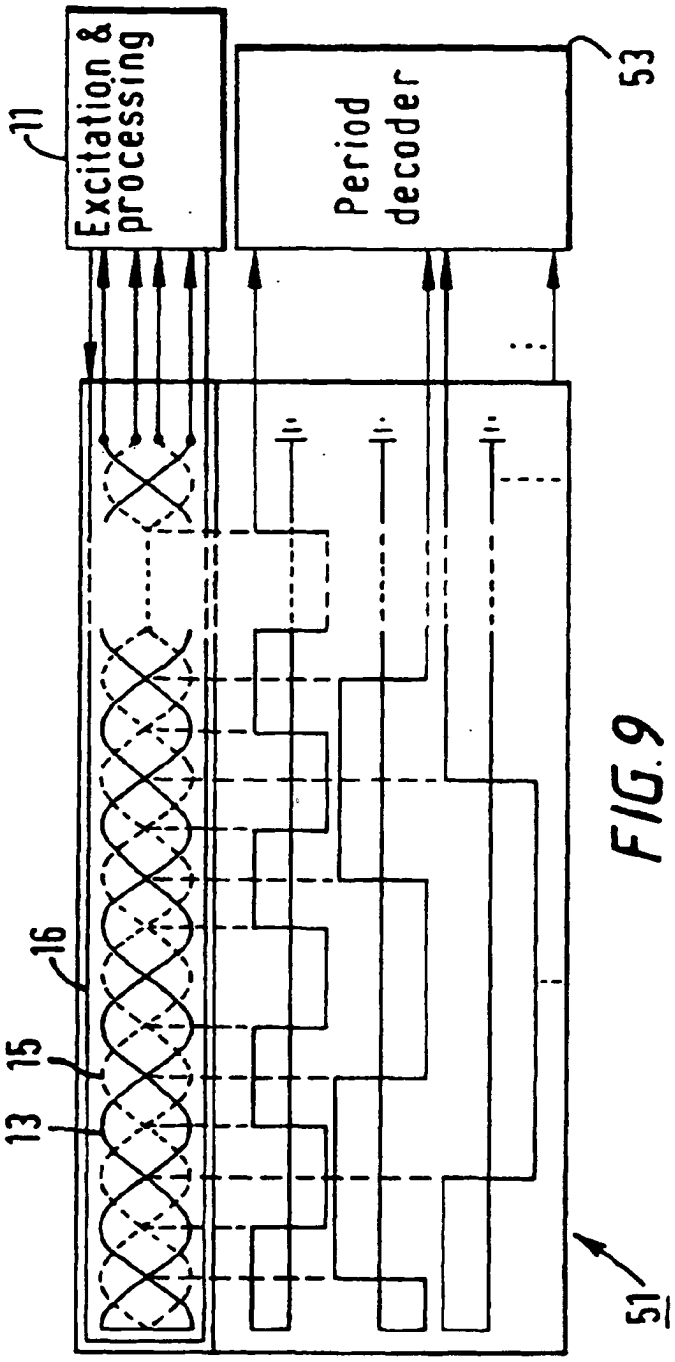
11
Excitation & processing
Period decoder
53
16
15
13
51

FIG.9

FIG.10

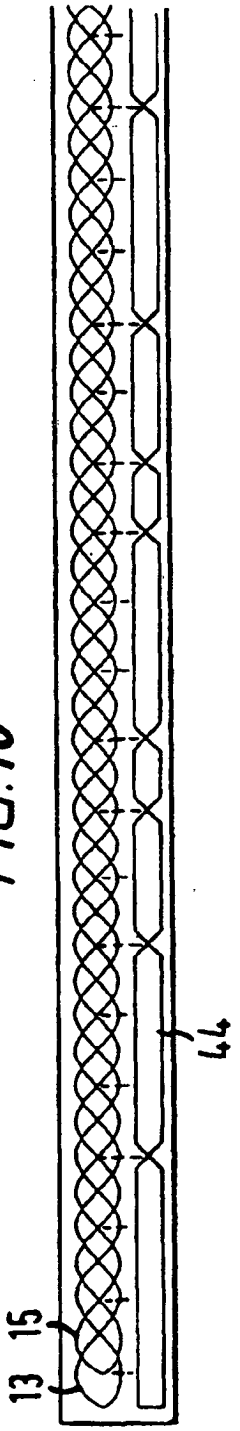

FIG.11

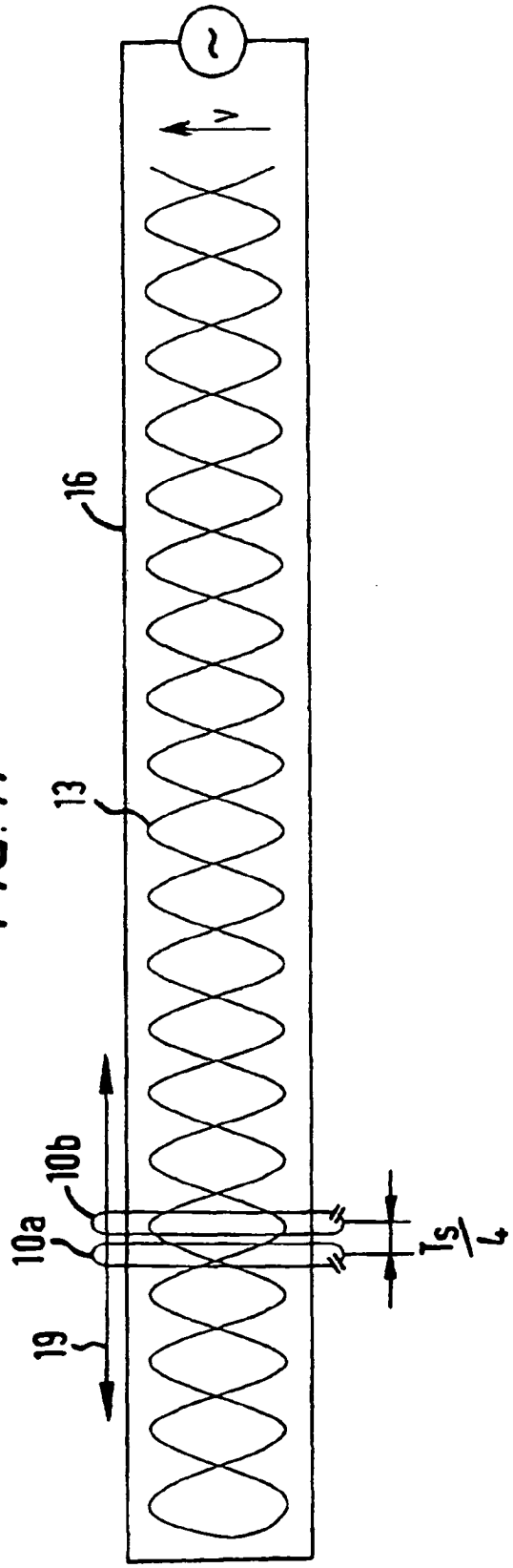

FIG. 12a

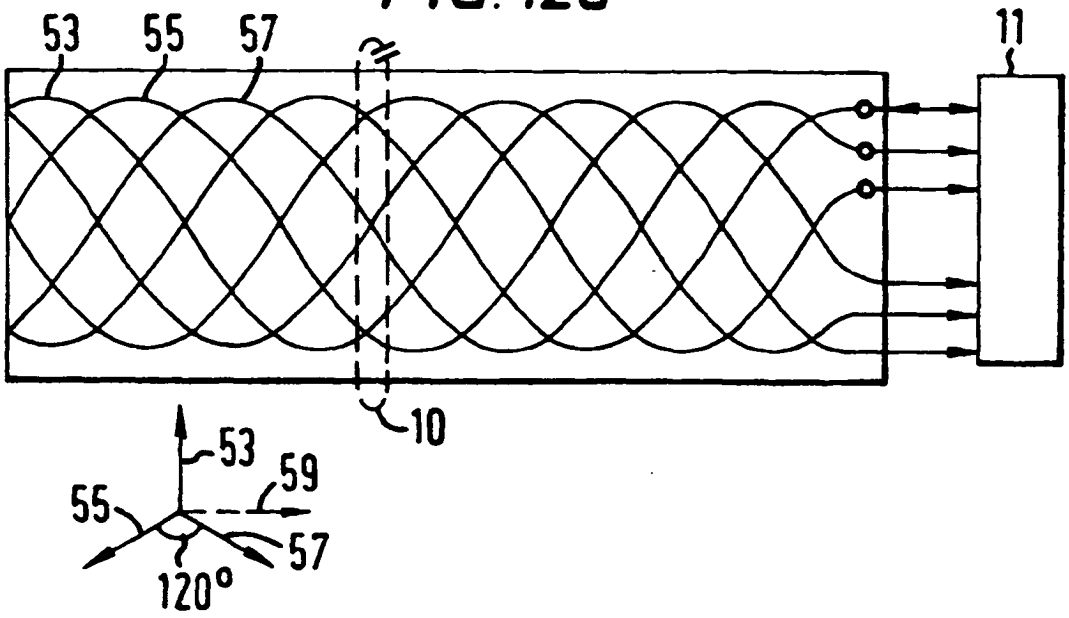

FIG. 12b

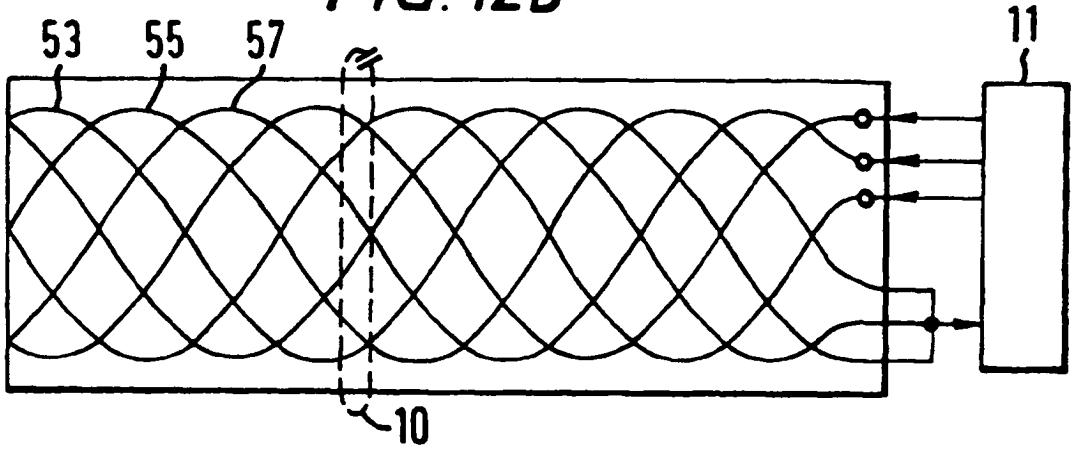

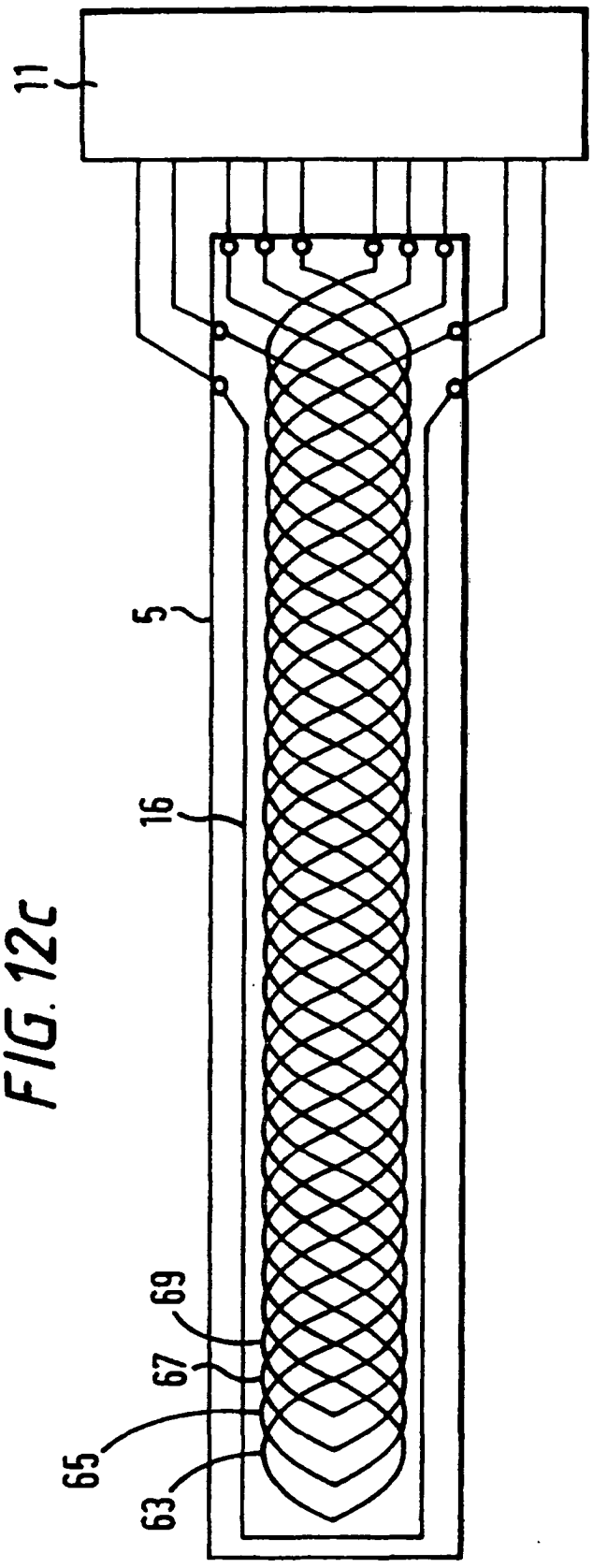

FIG. 12c

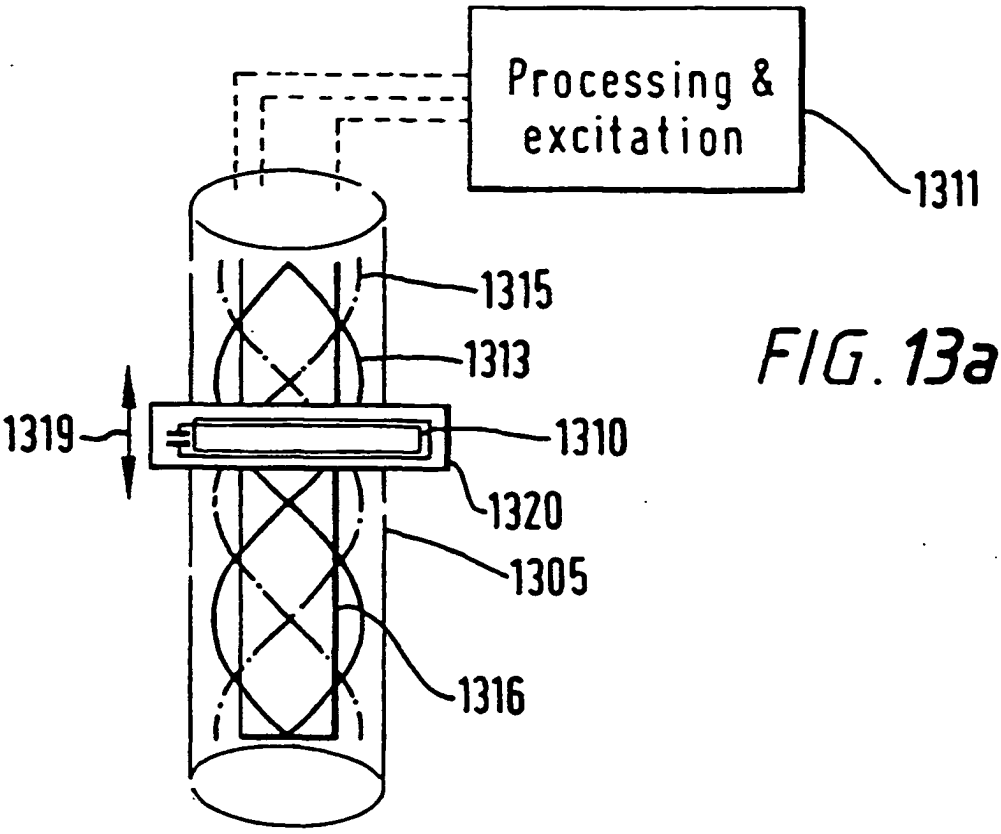

FIG. 13a

FIG. 13b

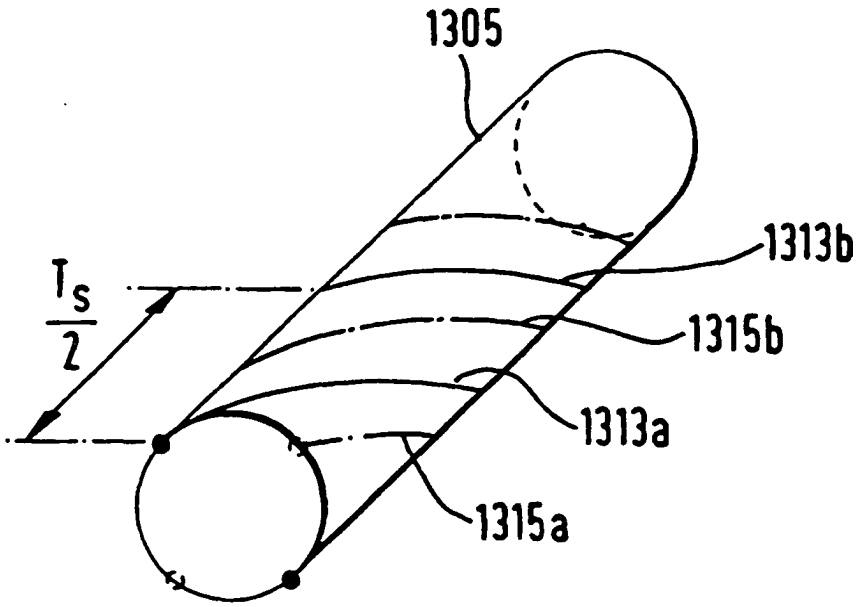

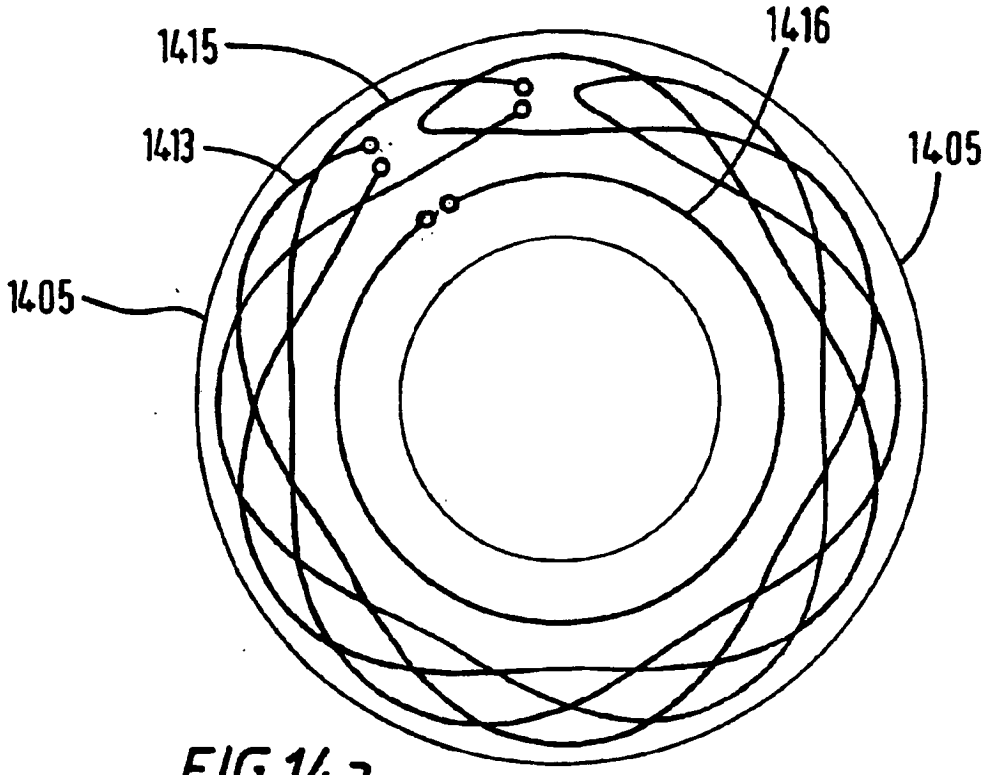

FIG.14a

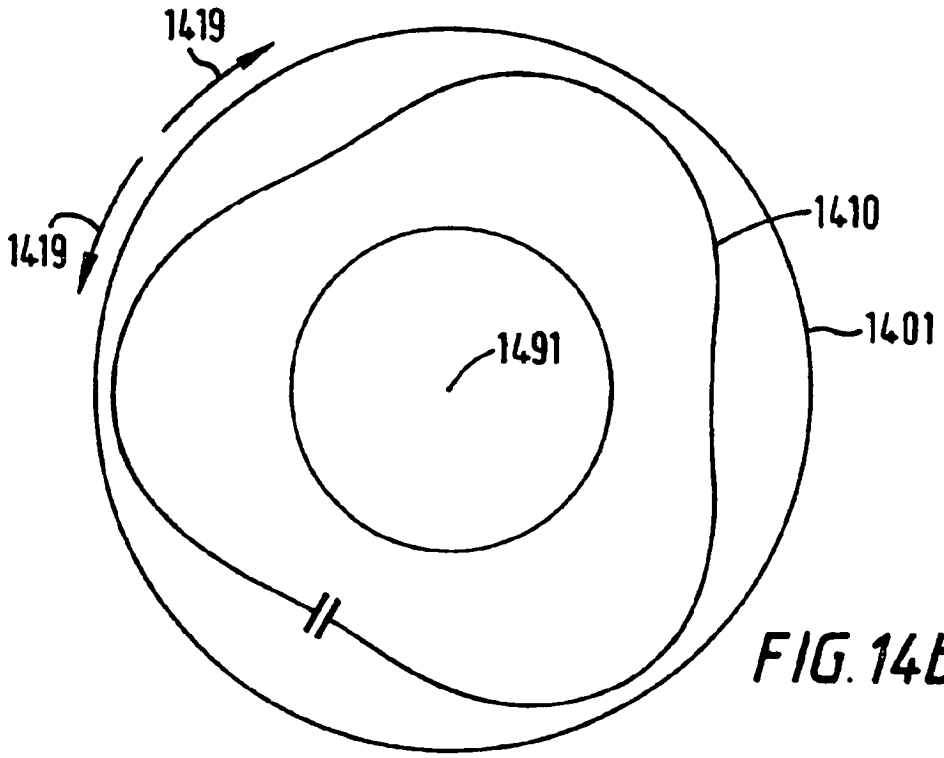

FIG.14b

FIG. 15

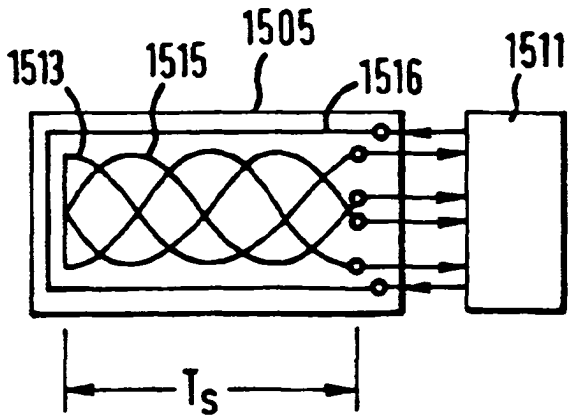

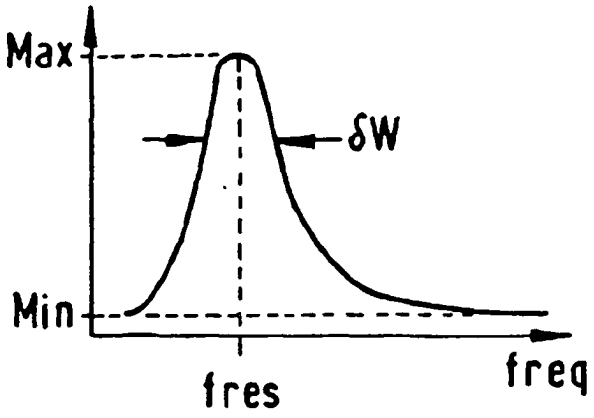

FIG. 16

FIG. 17

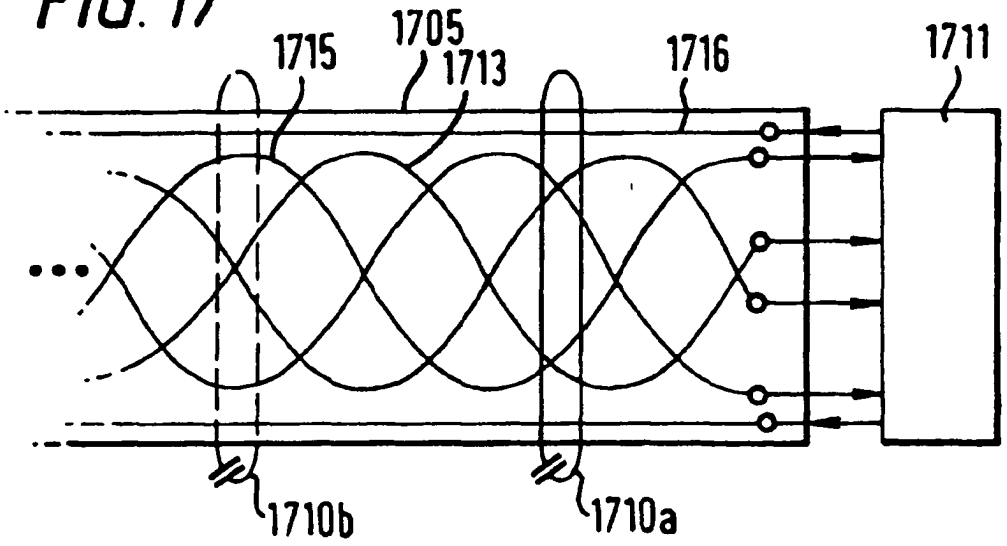

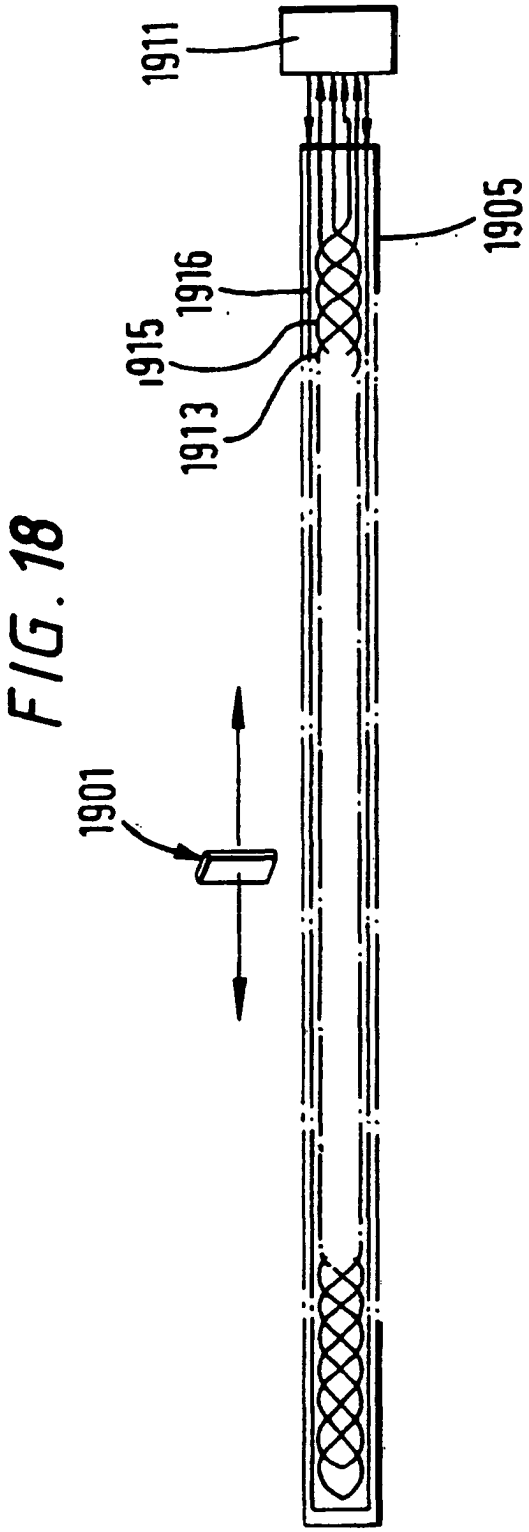

FIG. 18

FIG. 19

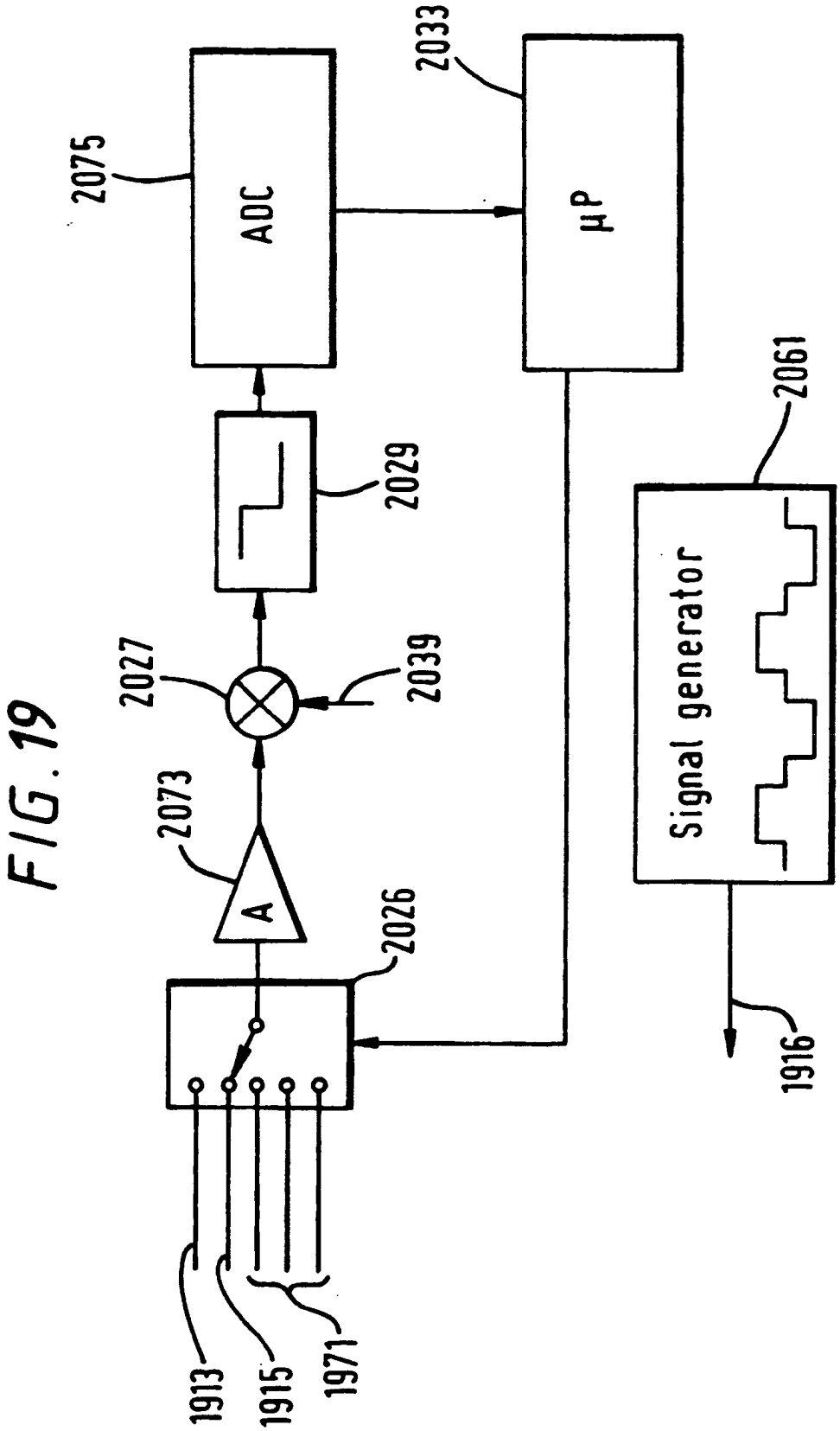
2033
2075
ADC
μP
2061
2029
Signal generator
2027
2039
2073
A
2026
1913
1915
1971
1916

FIG. 20

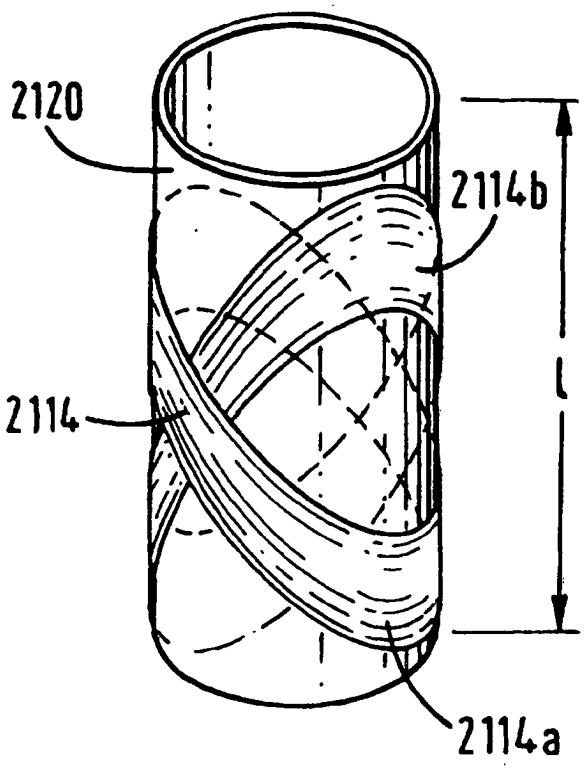

FIG. 21

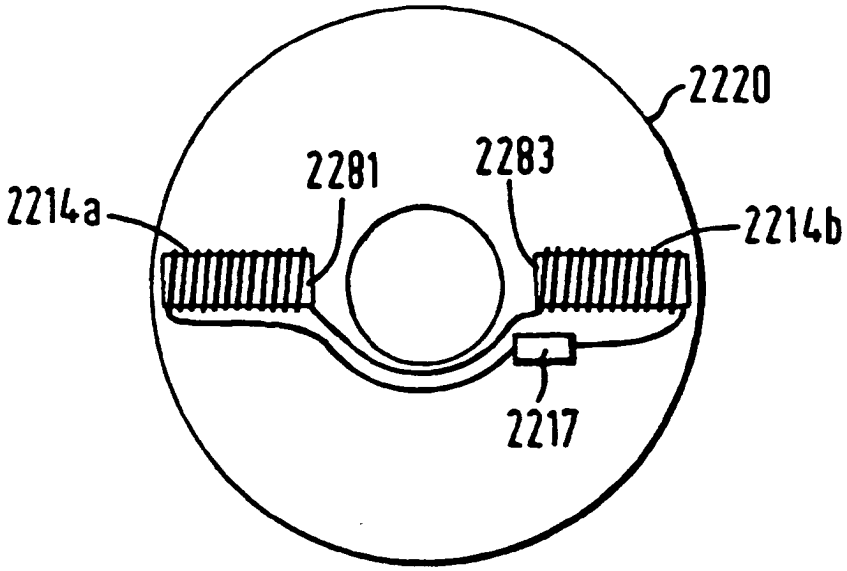

FIG. 22

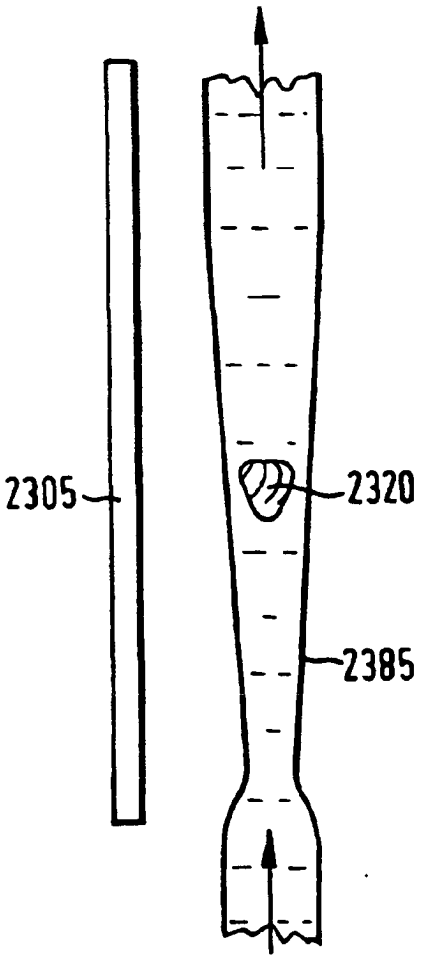

FIG. 23b

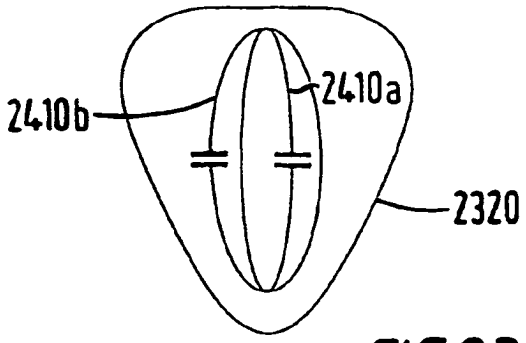

FIG. 23a

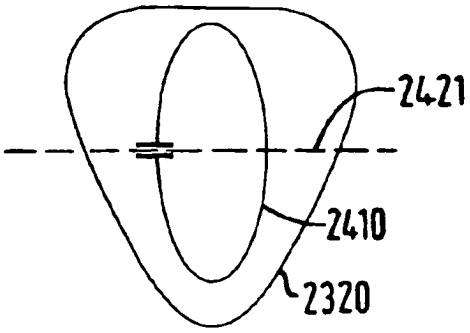

FIG. 23d

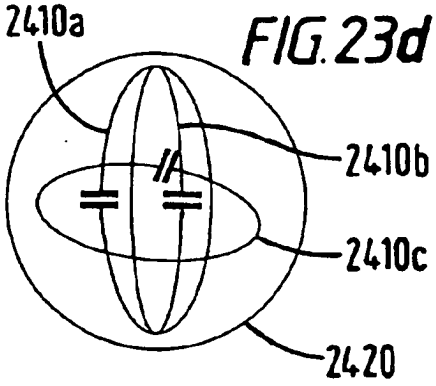

FIG. 23c

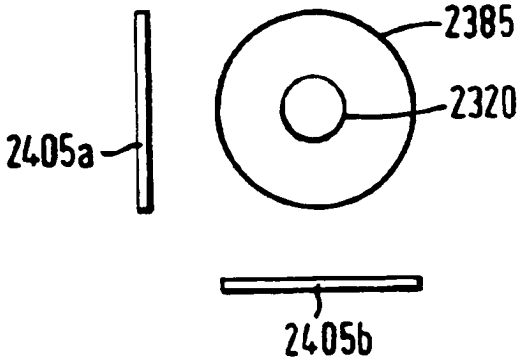

FIG. 24

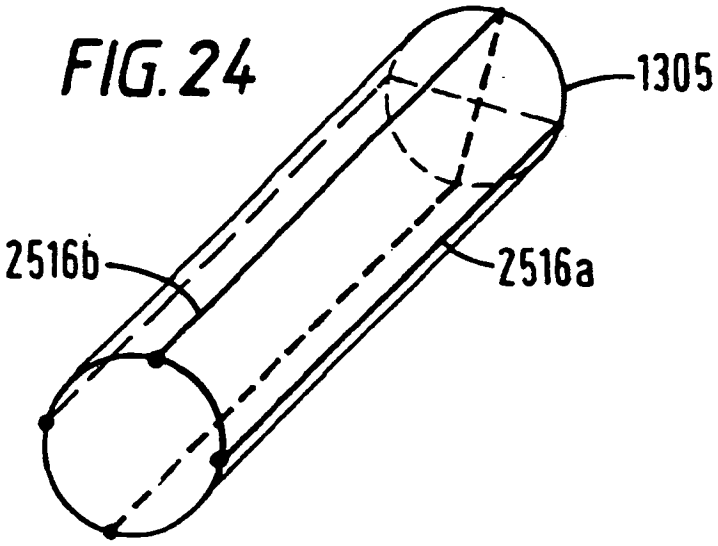

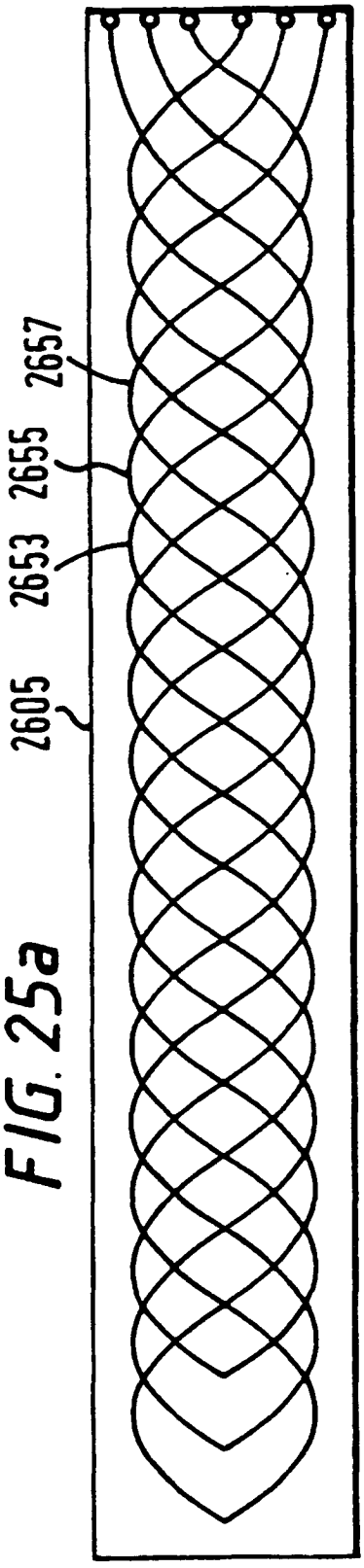

FIG. 25a

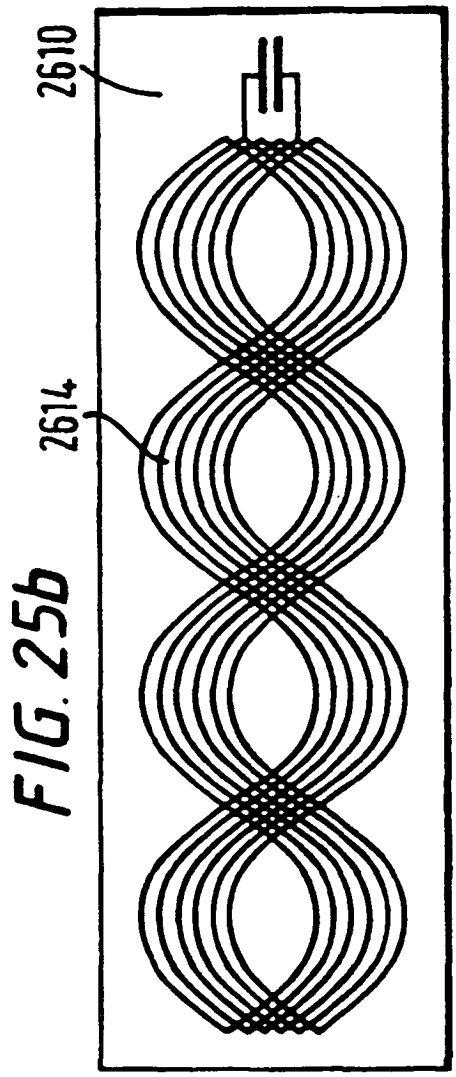

FIG. 25b

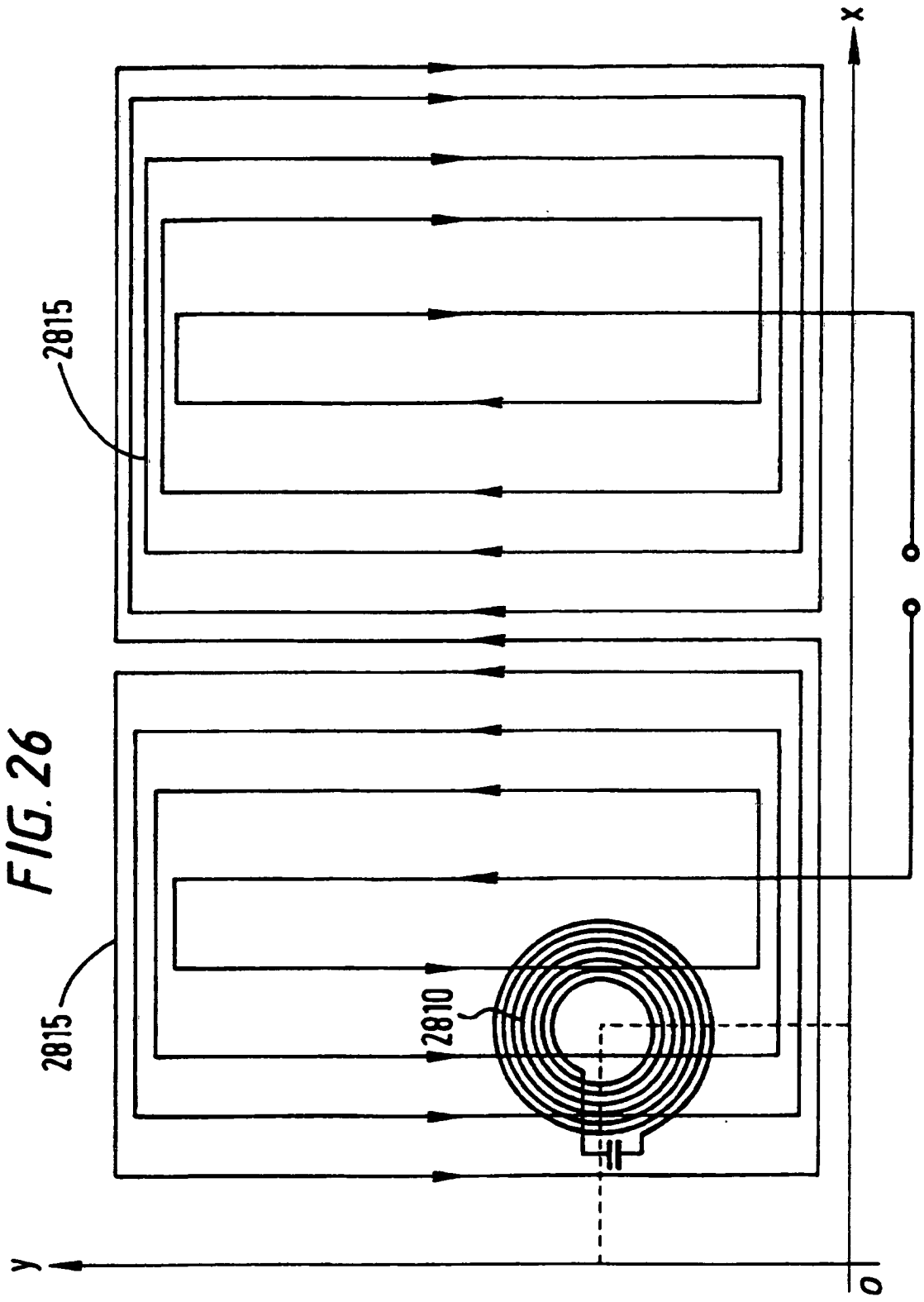

FIG. 26

FIG. 27a

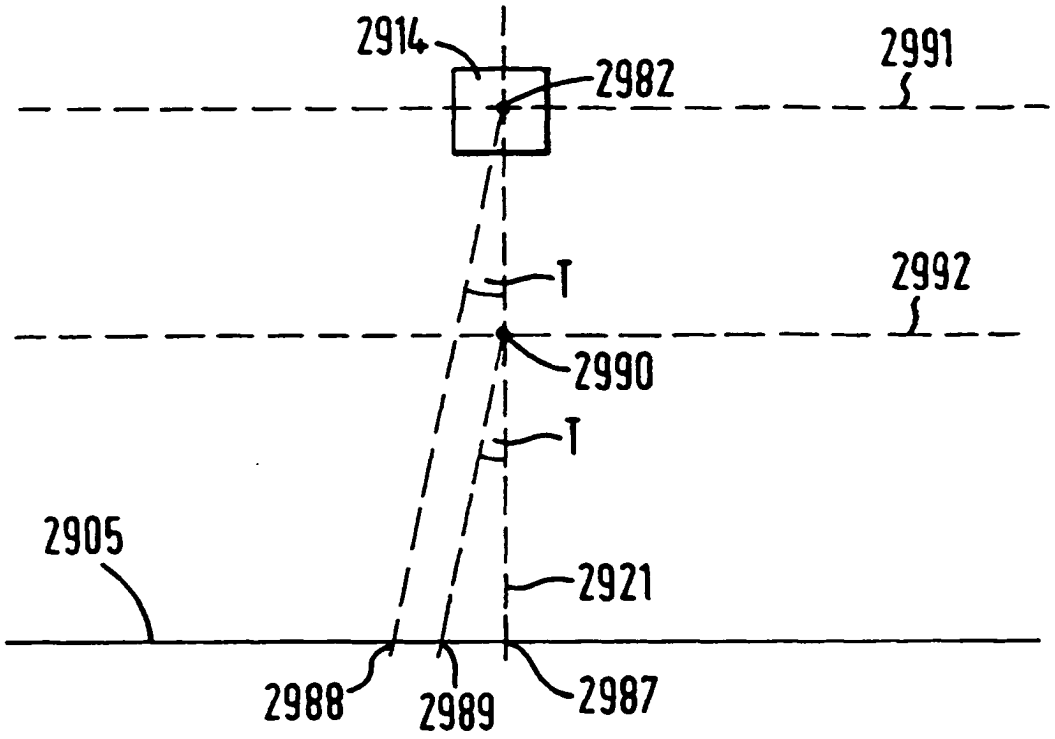

FIG. 27b

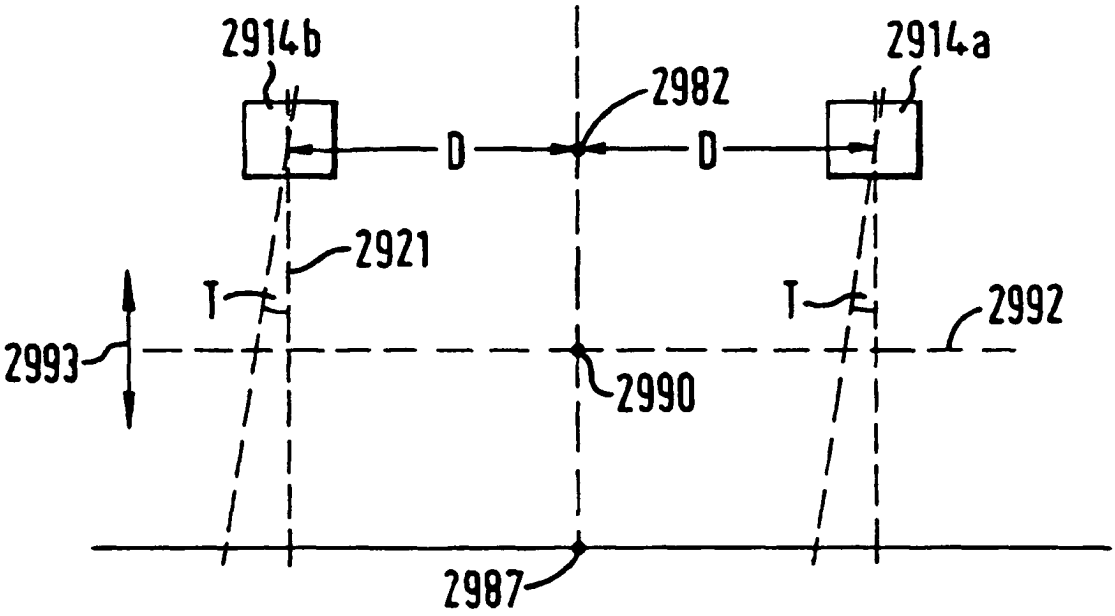

FIG. 28a

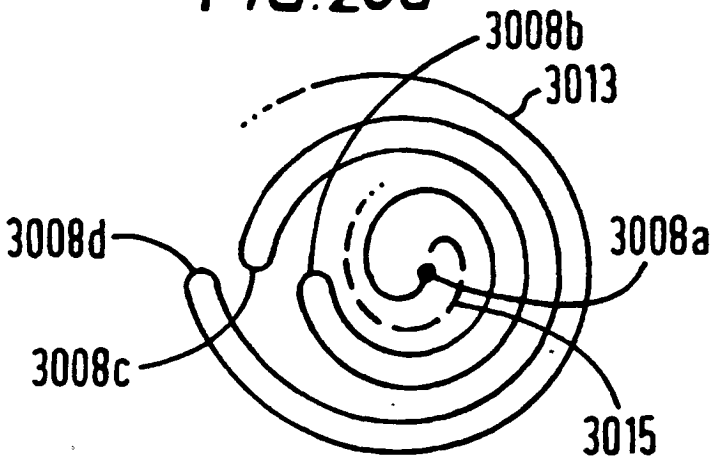

FIG. 28b

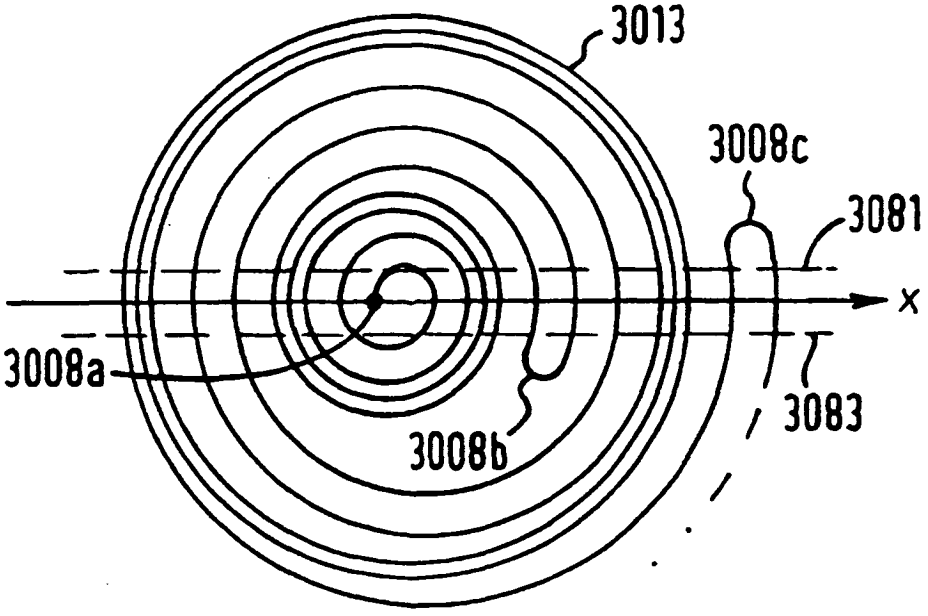

FIG.29

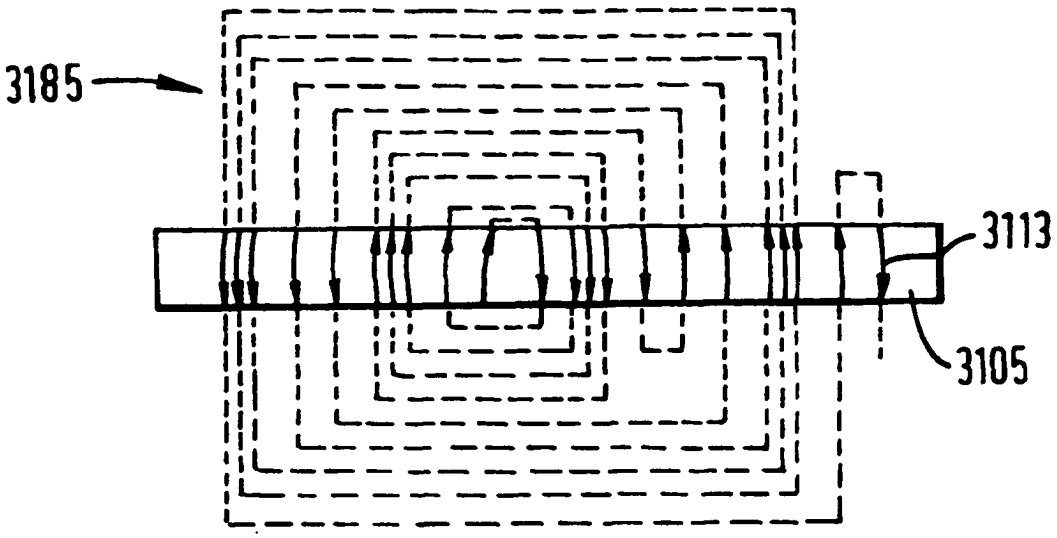

REGISTER ENTRY FOR EP0760087

European Application No EP95918680.0 filing date 15.05.1995

Priorities claimed:
14.05.1994 in United Kingdom - doc: 9409711
26.08.1994 in United Kingdom - doc: 9417353
03.10.1994 in United Kingdom - doc: 9420597
25.11.1994 in United Kingdom - doc: 9423861

PCT EUROPEAN PHASE
PCT Application PCT/GB1995/001095 Publication No WO1995/031696 on 23.11.1995

Designated States AT BE CH DE DK ES FR GB GR IE IT LI LU MC NL PT SE

Title POSITION ENCODER

Applicant/Proprietor
SCIENTIFIC GENERICS LIMITED, Harston Mill, Harston, Cambridgeshire CB2 5NH, United Kingdom [ADP No. 63254908001]

Inventors
ANDREW NICHOLAS DAMES, Scientific Generics Limited, Harston Mill, Harston, Cambridgeshire, CB2 5NH, United Kingdom [ADP No. 64999451001]

DAVID THOMAS ELIOT ELY, Scientific Generics Limited, Harston Mill, Harston, Cambridgeshire, CB2 5NH, United Kingdom [ADP No. 64999469001]

Classified to
G01D

Address for Service
SCIENTIFIC GENERICS LIMITED, Harston Mill, Harston, Cambridgeshire CB2 5NH, United Kingdom [ADP No. 63254908001]

EPO Representative
KEITH DENIS LEWIS BERESFORD, BERESFORD & Co. 2-5 Warwick Court High Holborn, London WC1R 5DJ, United Kingdom [ADP No. 50583137001]

Publication No EP0760087 dated 05.03.1997
Publication in English

Examination requested 28.11.1996

Patent Granted with effect from 29.04.1998 (Section 25(1)) with title POSITION ENCODER

28.11.1997 Notification from EPO of change of Inventor details from
ANDREW NICHOLAS DAMES, Scientific Generics Limited, Harston Mill, Harston, Cambridgeshire, CB2 5NH, United Kingdom
[ADP No. 64999451001]

DAVID THOMAS ELIOT ELY, Scientific Generics Limited, Harston Mill, Harston, Cambridgeshire, CB2 5NH, United Kingdom
[ADP No. 64999469001]
to
ANDREW NICHOLAS DAMES, Scientific Generics Limited, Harston Mill, Harston, Cambridgeshire, CB2 5NH, United Kingdom
[ADP No. 64999451001]

DAVID THOMAS ELIOT ELY, Scientific Generics Limited, Harston Mill, Harston, Cambridgeshire, CB2 5NH, United Kingdom
[ADP No. 64999469001]

ANDREW ROBERT LINTON HOWE, Scientific Generics Limited, Harston Mill, Harston, Cambridgeshire, CB2 5NH, United Kingdom
[ADP No. 66080623001]
Entry Type 25.14 Staff ID. RD06 Auth ID. EPT

16.11.1998 FILE RAISED
Entry Type 10.1 Staff ID. SB2 Auth ID. A3

19.02.1999 EPO: Opposition filed on 29.01.1999
Entry Type 25.1 Staff ID. RD06 Auth ID. EPT

26.02.1999 EPO: Opposition filed on 29.01.1999
Entry Type 25.1 Staff ID. RD06 Auth ID. EPT

20.09.1999 Application under Section 32 filed on 16.09.1999
Entry Type 8.1 Staff ID. KLYN Auth ID. F21

12.10.1999 ABSOLUTE SENSORS LIMITED, Incorporated in the United Kingdom, Harston Mill, HARSTON, Cambridgeshire, CB2 5NH, United Kingdom
[ADP No. 07558711001]
registered as Applicant/Proprietor in place of
SCIENTIFIC GENERICS LIMITED, Harston Mill, Harston, Cambridgeshire CB2 5NH, United Kingdom [ADP No. 63254908001]
by virtue of deed of assignment dated 12.08.1999. Certified copy filed on EP0760087
Entry Type 8.4 Staff ID. PT2 Auth ID. F21

23.03.2001 Application under Section 32 filed on 21.03.2001
Entry Type 8.1 Staff ID. NK Auth ID. F20

05.04.2001 Notification of change of Applicant/Proprietor name of
ABSOLUTE SENSORS LIMITED, Incorporated in the United Kingdom, Harston Mill, HARSTON, Cambridgeshire, CB2 5NH, United Kingdom
[ADP No. 07558711001]
to
SYNAPTICS (UK) LIMITED, Incorporated in the United Kingdom, Harston Mill, HARSTON, Cambridgeshire, CB2 5GG, United Kingdom
[ADP No. 07866809002]
dated 22.02.2000. Official evidence filed on EP0760087
Entry Type 7.2 Staff ID. SMO1 Auth ID. F20

21.05.2001 Notification of change of Address For Service name and address of
SCIENTIFIC GENERICS LIMITED, Harston Mill, Harston, Cambridgeshire
CB2 5NH, United Kingdom [ADP No. 63254908001]
to
BERESFORD & CO, 2-5 Warwick Court, High Holborn, LONDON, WC1R 5DH,
United Kingdom [ADP No. 00001826001]
dated 17.05.2001. Official evidence filed on EP NEW APPS
Entry Type 7.1 Staff ID. GRWI Auth ID. A1

05.11.2003 Notification of change of Address For Service address of
BERESFORD & CO, 2-5 Warwick Court, High Holborn, LONDON, WC1R 5DH,
United Kingdom [ADP No. 00001826001]
to
BERESFORD & CO, 16 High Holborn, LONDON, WC1V 6BX, United Kingdom
[ADP No. 00001826001]
dated 01.11.2003. Written notification filed on GB2381143
Entry Type 7.3 Staff ID. AS2 Auth ID. B3

19.03.2004 EPO: Case amended on 21.04.2004
Entry Type 25.12 Staff ID. RD06 Auth ID. EPT

**** END OF REGISTER ENTRY ****

RENEWAL DETAILS

PUBLICATION NUMBER EP0760087

PROPRIETOR(S)

Synaptics (UK) Limited, Incorporated in the United Kingdom, Harston Mill, HARSTON, Cambridgeshire, CB2 5GG, United Kingdom

DATE FILED 15.05.1995

DATE GRANTED 29.04.1998

DATE NEXT RENEWAL DUE 15.05.2005

DATE NOT IN FORCE

DATE OF LAST RENEWAL 04.05.2004

YEAR OF LAST RENEWAL 10

STATUS PATENT IN FORCE

**** END OF REPORT ****