July 23, 1957 A. A. ONDREJKA 2,800,243

MULTIPLE WALL CONTAINER AND METHOD OF CONSTRUCTION

Filed Nov. 26, 1954

Fig 1

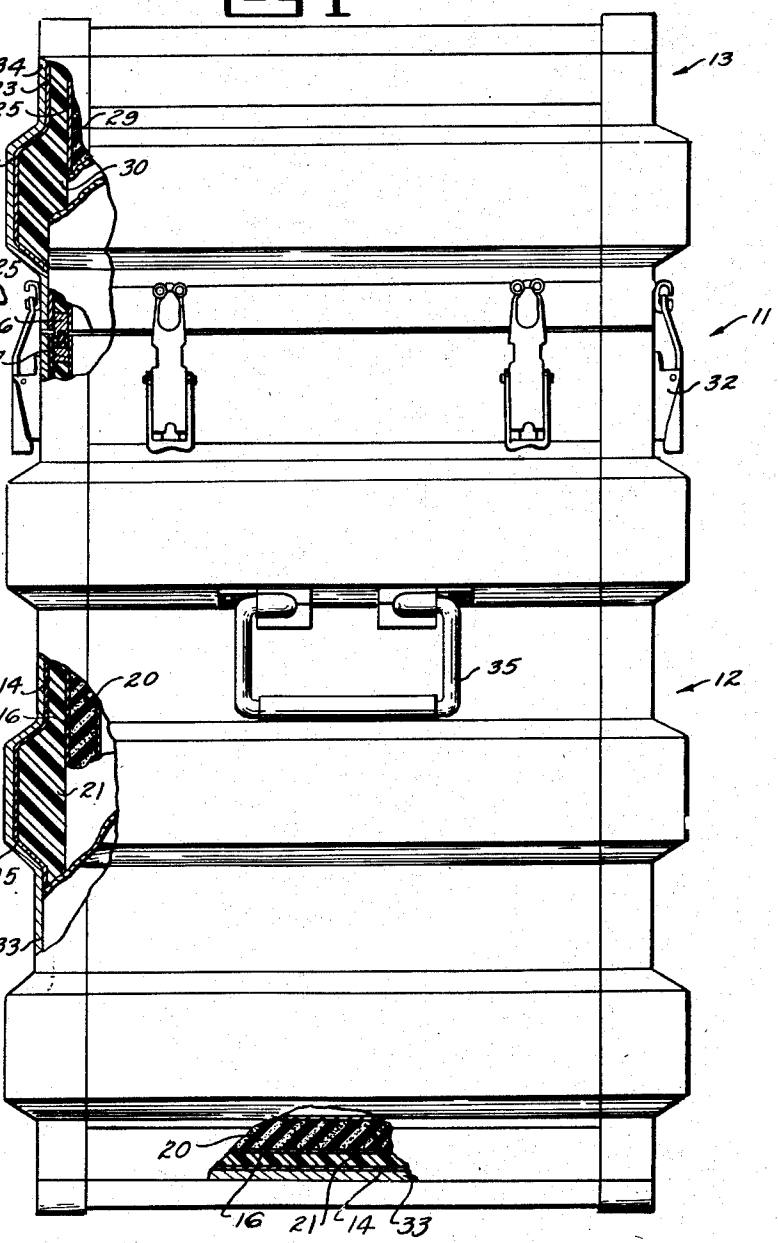

Fig 2

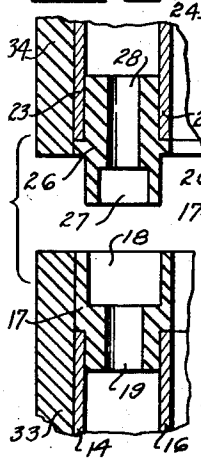

Fig 3

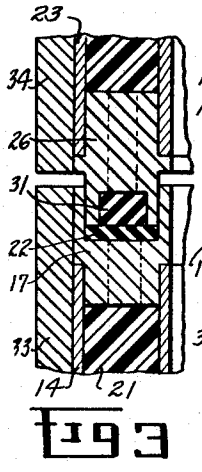

INVENTOR.
ALBERT A. ONDREJKA
BY Lloyd B. Stevens, Jr.
Wade Koontz and
ATTORNEYS

United States Patent Office 2,800,243 Patented July 23, 1957

2,800,243

MULTIPLE WALL CONTAINER AND METHOD OF CONSTRUCTION

Albert A. Ondrejka, Rome, N. Y., assignor to the United States of America as represented by the Secretary of the Air Force

Application November 26, 1954, Serial No. 471,546

3 Claims. (Cl. 220—15)

(Granted under Title 35, U. S. Code (1952), sec. 266)

The invention described herein may be manufactured and used by or for the United States Government for governmental purposes without payment to me of any royalty thereon.

The invention relates to a shock-resistant rigid lightweight container adapted to transport or carry transits, electronic equipment, radar equipment and similar delicate equipment, and to a method of making this container wherein a central plastic core is cast in the space between two shells to form a rigid container.

It is an object of this invention to provide a lightweight rigid container which is resistant to shock for transporting or carrying delicate equipment.

Another object of this invention is to provide an easy and relatively low cost method of manufacturing a shock-resistant rigid lightweight container for delicate equipment.

Still another object of this invention is to provide any desirable degree of protection in a shock-resistant container by varying the plastic used in the core and/or the thickness of the core.

A further object of this invention is to provide shock-resistant containers that may be manufactured by small shops.

An additional object of my invention is to provide shock-resistant rigid lightweight leak-resistant containers and a method for manufacturing them.

A particular object of my invention is to provide a shock-resistant rigid lightweight leak-resistant container having a body and separable top which may be made by positioning by a rim an inner shell within an outer shell which may have undulations therein, casting a plastic in the space between shells, the body and cover rims containing gaskets and being shaped and positioned to mate in a male-female relationship, and attaching to the container certain other auxiliary equipment as desired such as carrying handles, separable fastening means, reinforcing edging on the rectangular containers, sponge rubber inner liners, etc.

A detailed discussion of a preferred embodiment of my invention will be made in conjunction with the attached drawings.

Fig. 1 is an elevational view partially in section of my improved container.

Fig. 2 is enlarged sectional elevation views showing the cover and body rims.

Fig. 3 is an enlarged sectional elevation view showing the cover and body rims mated gasket to gasket.

Container **11** is composed of two main parts which are body **12** and cover **13**. Body **12** has an outer shell **14** having horizontal undulations **15** therein and an inner shell **16**. These shells may be formed by conventional techniques depending on their composition. The inner shell is positioned within the outer shell by rim **17**. Rim **17** is formed in the shape of a female element having groove **18** in one side thereof and spaced openings **19** communicating groove **18** with the other side of the rim.

Rim **17** is bonded to outer shell **14** and inner shell **16** by welding or other suitable means depending upon the material which the rim and the shells are made. That is, welding would be suitable for bonding the rim to the inner and outer shells if they were made of steel. An adhesive would be required to bond the inner and outer shells to the rim if they were made of plastic. Aluminum alloys, magnesium alloys and certain other metals and alloys may also be suitable for the rim and shells. The purpose of bonding the rim to the shells is to insure leak-proof seals between the rim and the shells and to support and position inner shell **16** within outer shell **14**, providing an air space between the shells. A resilient inner liner **20** is attached to the inner surface of inner shell **16** by a metal support or other suitable means. This resilient inner liner is preferably made of sponge rubber or the equivalent thereof. If a steel support is used to attach resilient inner liner **20** to an inner steel shell, welding or riveting are suitable methods of attachment.

The next step in the manufacture of my container is to pour a liquid plastic through openings **19** into the space between shells **14** and **16** displacing the air therefrom. Plastics which are particularly suitable for my invention are foam-in-place plastics. Some examples of suitable foam-in-place plastics are: alkyd-diisocyanates which are manufactured by the Goodyear Aircraft Co.; "Armfoam," Armour & Company; "Nopco Lockfoam," Nopco Chemical Co., Harrison, N. J.; "Stypol 101–1.5E," H. H. Robertson Co., Pittsburgh, Pa.; and phenolic and nylon-modified butadiene-acrylonitriles, Hamilton-Standard Div. of United Aircraft Corp., Hartford, Conn. Depending upon the particular plastic which is used a catalyst may be required to cause the plastic to cure and solidify within a reasonable time and elevated temperatures of the order of about 200° F. to 300° F. may be required, and in such case the container having the liquid plastic therein is put in a furnace where the plastic cures and solidifies forming a rigid container.

Now gasket **22** is bonded within groove **18** closing openings **19** therein. The gasket is preferably made of neoprene rubber having a hardness of about 60 to 70 durometer at room temperature. Another suitable gasket material is a rubber-cork composition having comparable hardness. The gasket may be bonded within the groove by a suitable adhesive, and the purpose of bonding the gasket within the groove is to completely seal-in the core of the container so no leakage into the core may occur. A further purpose of the gasket **22** is to provide a leak-resistant seal when gasket **22** is mated with gasket **31**.

Cover **13** of container **11** is manufactured in a method similar to that used in manufacturing body **12**. Cover **13** is composed of outer shell **23** having undulation **24** therein, inner shell **25**, rim **26** and plastic **30**. Materials used in the cover are preferably the same as those used in the body. Rim **26** is fashioned in the form of a male element which has a groove **27** and spaced openings **28** communicating the groove with the other side of the rim. In a like manner to rim **17** of the body, rim **26** is bonded to the inner and outer shells of the cover. Spaced openings **28** in the cover rim allow liquid plastic to be poured between the cover shells. After plastic **30** is cured and solidified it is sealed in by a plug-like gasket **31** which is bonded in groove **27**, filling this groove and extending outside it.

Container **11** is rectangular in shape and its edges and corners are reinforced by extra-heavy strips of material **33** on the body and **34** on the cover. This reinforcing material is preferably made of the same material that is used in the inner and outer shells of the body and cover. The reinforcing material may be attached to the body and cover by welding or other suitable means depending

upon the material used. Separable fastening means **32** are attached to cover **13** and body **12** to allow the cover to be securely and tightly clamped to the body providing a leak-resistant container. Carrying handles **35** are attached to the outside shell of the body to provide for easy hand-carrying of the container.

Although the invention has been described in terms of a specific embodiment which is set forth in considerable detail, it should be understood that this is by way of illustration only and that the invention is not necessarily limited thereto, since alternative embodiments will become apparent to those skilled in the art in view of the disclosure. For example, the container may be cylindrical or other shapes as well as rectangular. Accordingly, modifications are contemplated which may be made without departing from the spirit of the described invention or of the scope of the appended claims.

I claim:

1. A shock-resistant rigid lightweight container having a body and a separable cover, said body comprising an outer shell, an inner shell, a rim having a groove in the upper and outer side thereof and spaced openings communicating the groove with the other side of said rim, said inner shell being joined with and positioned within said outer shell by said rim which is bonded to both shells to form leak-proof seals, a solid plastic filling the space between said shells, and a gasket positioned in said groove and closing the openings therein; and said cover comprising a cover outer shell, a cover inner shell, a cover rim having a groove in the lower and outer side thereof and spaced openings communicating the groove with the other side of the rim, the cover inner shell being joined with and positioned within the cover outer shell by the cover rim which is bonded to both shells to form leak-proof seals, a plastic filling the space between said cover shells, a gasket in the cover rim groove closing the openings therein, and said rim and cover rim being so shaped and positioned that they fit together gasket to gasket in a male-female relationship when said cover is on said body.

2. A shock-resistant rigid lightweight leak-resistant container particularly designed for carrying and transporting sensitive instruments and having a body and a separable cover, said body comprising an outer shell having undulations therein, an inner shell, a rim having a groove in the upper and outer side thereof and spaced openings communicating said groove with the other side of said rim, said inner shell being joined with and positioned within said outer shell by said rim which is bonded to both shells to form leak-proof seals, a resilient inner liner attached to said inner shell, a solid plastic filling the space between said shells, and a gasket positioned in and bonded to said groove closing the openings therein; and said cover comprising a cover outer shell having undulations therein, a cover inner shell, a cover rim having a groove in the lower and outer side thereof and spaced openings communicating the groove with the other side of the rim, said cover inner shell being joined with and positioned within said cover outer shell by said cover rim which is bonded to both shells to form leak-proof seals, a resilient inner liner attached to said cover inner shell, a solid plastic filling the space between said cover shells, a gasket positioned in and bonded to the cover rim groove closing the openings therein, said rim and cover rim being so shaped and positioned that they fit together gasket to gasket in a male-female relationship when said cover is on said body, and separable fastening means attached to said cover and said body, said fastening means being capable of securely fastening said cover to said body to give a leak-resistant container.

3. The container of claim 2 wherein said container is rectangular in shape, the outer edges and corners of said container are reinforced by extra-heavy strips of material attached thereto, said undulations are horizontal undulations, carrying handle means are attached to the outer shell of the body of said container, said resilient liners are sponge rubber, said gaskets are hard neoprene rubber, and said plastic is foam-in-place plastic.

References Cited in the file of this patent

UNITED STATES PATENTS

1,504,353	Kilus et al.	Aug. 12, 1924
1,651,655	Wright et al.	Dec. 6, 1927
2,147,886	Devine	Feb. 21, 1939
2,318,744	Brown	May 11, 1943
2,546,166	Pfefferkorn	Mar. 27, 1951
2,552,641	Morrison	May 15, 1951
2,639,252	Simon et al.	May 19, 1953

FOREIGN PATENTS

555,050	France	Mar. 15, 1923
767,544	France	May 1, 1934