Dec. 8, 1964 N. J. HUGHES 3,160,189

SELF TAPPING T NUT

Filed July 11, 1962

Fig. 1.

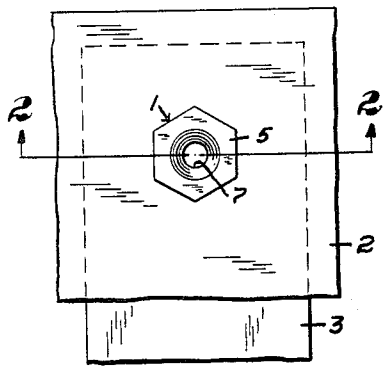

Fig. 2.

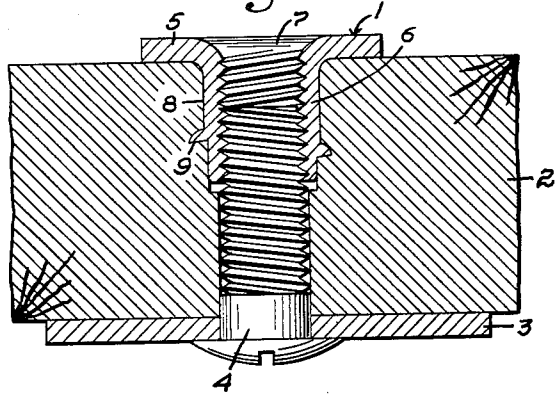

Fig. 3.

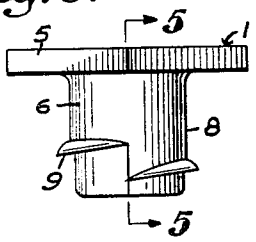

Fig. 4.

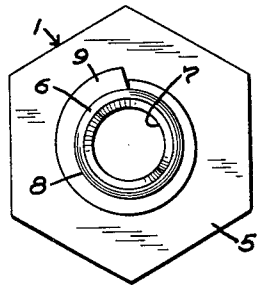

Fig. 5.

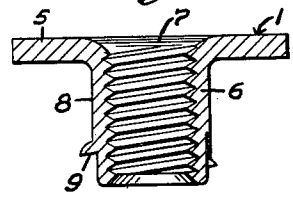

Fig. 6.

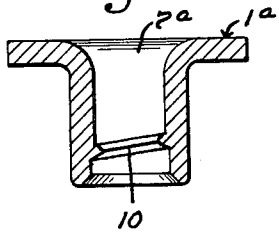

Fig. 7.

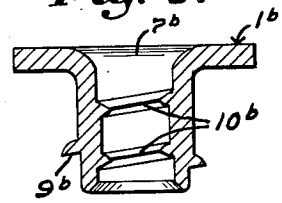

Inventor:
Norman J. Hughes,
by Walter S. Jones
Atty.

United States Patent Office 3,160,189 Patented Dec. 8, 1964

3,160,189

SELF-TAPPING T NUT

Norman J. Hughes, Melrose, Mass., assignor to United-Carr Incorporated, a corporation of Delaware

Filed July 11, 1962, Ser. No. 209,002
1 Claim. (Cl. 151—41.73)

This invention relates to threaded devices that have a barrel-like portion (which may be an attaching shank) adaptable to many uses such as bushings, threaded nut devices, and the like.

An object of the invention is to provide a device having a shank portion with a wall surrounding the axis of the shank portion and a helical thread-like means extending laterally from around said wall, the thread-like means being formed from material shaved from the surface of the wall by suitable shaving die means, and the thread means being formed by the shaving die means during the manufacture of the device rather than as a secondary thread forming operation.

Another object of the invention is to provide a desired device with the shaved helical thread means formed on an inside or an outside wall of the shank portion of the device or on both walls if so desired.

A further object of the invention is to form the thread means in such a manner that the shank of the device has a wall thickness thinner at one side than the wall thickness at the other side of the thread.

A further object of the invention is to provide a thread means having an increasing radial distance from one end of the thread to the other end of the thread.

In the drawings which illustrate preferred embodiments of the invention:

FIG. 1 is a plan view of a portion of an installation showing one form of the invention where the barrel has a conventional inner thread and the improved thread of this invention on the outer wall;

FIG. 2 is a section taken on the line 2—2 of FIG. 1;

FIG. 3 is a side elevation of the nut device shown in FIG. 2;

FIG. 4 is a plan view of the device shown in FIG. 3 as viewed from the bottom end;

FIG. 5 is a section taken on the line 5—5 of FIG. 3;

FIG. 6 is a section of a device of the invention showing the improved thread means formed on the inner wall of the shank; and

FIG. 7 is a section of a device of the invention showing the inner and outer walls of the shank provided with the thread means of the invention.

Referring now to the particular form of the invention shown in FIGS. 1 through 5 there is shown an attachable threaded device 1 secured to a member 2 of wood or other soft material and another part 3 attached to the part 2 by a bolt member 4.

The particular threaded device illustrated is formed from sheet metal and has a base 5 from which extends an attaching shank or barrel 6 preferably hollow and preferably open at both ends. The attaching shank is provided with an inner wall 7 having a conventional thread to mate with the bolt 4 and an outer wall 8 which extends parallel to the axis of the shank and is provided with helical thread means 9.

The important feature of the invention is in the thread means 9 which is formed by axially shaving material from the outer wall 8 beginning at an end of the shank 6 and working toward the other end. It will be understood by anyone skilled in the art that the pitch or angle of the thread means 9 may be varied to some extent providing the result is a helical threaded means extending substantially around the circumference of the shank 6. It will also be understood that this shaving may be accomplished

by suitable die means which may be incorporated in the tools that form the sheet metal threaded device so that the thread means 9 is formed during the manufacture of the device and without the necessity for any secondary thread forming operation. This, of course, would be a saving in cost, and furthermore, will result in a particularly shaped thread which is strong and may easily thread itself into the support 2. It provides excellent holding power against the device being pushed out of the support 2 when the bolt is threaded into the device during the assembly of the parts.

The particular thread 9 which has been found to give better holding power than anything heretofore known is so formed that the thread has a root diameter greater on the side toward the flange 5 than the root diameter of the same thread on the side of the shank from which the material has been taken to form the thread.

Another important feature of the invention which results from the shaving formation of the thread 9 is the fact that it is possible to easily provide a thread which has an increasing radial distance from one end to the other as clearly shown in FIG. 4. Thus the smallest radial distance is at the end of the thread which is closest to the free end of the shank so that it is easy to start the threading operation into the support and the greatest radius is at the end of the thread nearest the flange thereby providing for a greater area contact between the thread and the support than would be possible with a conventional thread formed by a secondary operation.

It will of course be understood that the helical thread means may be either right or left handed.

In the section of the device shown in FIG. 6 a thread 10, also formed by a shaving operation similar to the way of forming the thread shown in FIGS. 3, 4, and 5, is provided on the inner wall 7*a* of the device 1*a*. This type of a thread member might be useful on an ordinary inexpensive nut where it isn't necessary to provide a thread throughout the entire length of the barrel.

The device 1*b* shown in FIG. 7 has a thread 9*b* on the outer wall of the barrel the same as in FIGS. 3, 4, and 5 and threads 10*b* on the inner wall of the barrel as shown in FIG. 6. In other words, it will be seen, by this disclosure of FIG. 7, that a nut device similar to FIG. 6, but having the self-attaching thread 9*b*, could be used in an installation, like shown in FIG. 2, both thread means being provided by this new and useful thread forming construction. The threads 10*b* may be formed by tools displacing the material from both ends of the shank 6 of the inner wall 7*b* or two or more threads 10*b* may be formed if the threads are interrupted and suitable sciving tools are used to form the interrupted portions.

From the disclosure and the descriptions above it will be understood that the invention is not limited to any one particular device for any one particular application but that there will be variations as to the types of devices and also as to the formation of the helical means without departing from the basic idea of the invention of the part thereby eliminating secondary operations and resulting in devices with novel shaped thread means and providing extra strong holding engagement particularly between the device itself and the support to which it is threaded.

It should be understood further that the device is best defined by the following claim.

I claim:

A fastener device comprising a radially enlarged annular base, an aperture formed through said base, a tubular shank extending from said base and having inner and outer surfaces, said inner surface being a continuation of the wall defining said aperture and having an external thread means, and an external thread formed integral with said outer surface and traversing a continuous heli-

coidal path continuously through at least one circumvolution of the axis of said shank, said shank having a wall thickness thinner at one side of said external thread than the other and said external thread being formed from material originally at the thin side between the thread and the spaced end of the shank, said thread means having a continuously increasing radial thickness from its commencement to its end.

References Cited in the file of this patent

UNITED STATES PATENTS

2,455,885	Theurer	Dec. 7, 1948
2,832,972	Richards	May 6, 1958
3,092,162	Johnson	June 4, 1963

FOREIGN PATENTS

778,327	Great Britain	July 3, 1957

UNITED STATES PATENT OFFICE

CERTIFICATE OF CORRECTION

Patent No. 3,160,189 December 8, 1964

Norman J. Hughes

It is certified that error appears in the above identified patent and that said Letters Patent are hereby corrected as shown below:

Column 2, line 69, "external" should read -- internal --.

Signed and sealed this 10th day of November 1970.

(SEAL)
Attest:

Edward M. Fletcher, Jr.
Attesting Officer

WILLIAM E. SCHUYLER, JR.
Commissioner of Patents