No. 882,310. PATENTED MAR. 17, 1908.

F. J. HATHWAY.

DEVICE FOR RECOVERING SUBMERGED LOGS.

APPLICATION FILED OCT. 1, 1907.

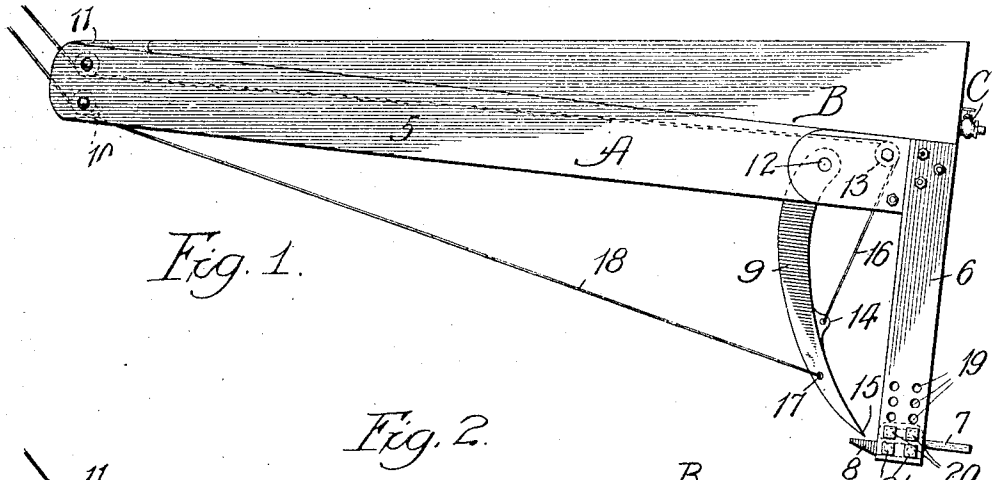

Fig. 1.

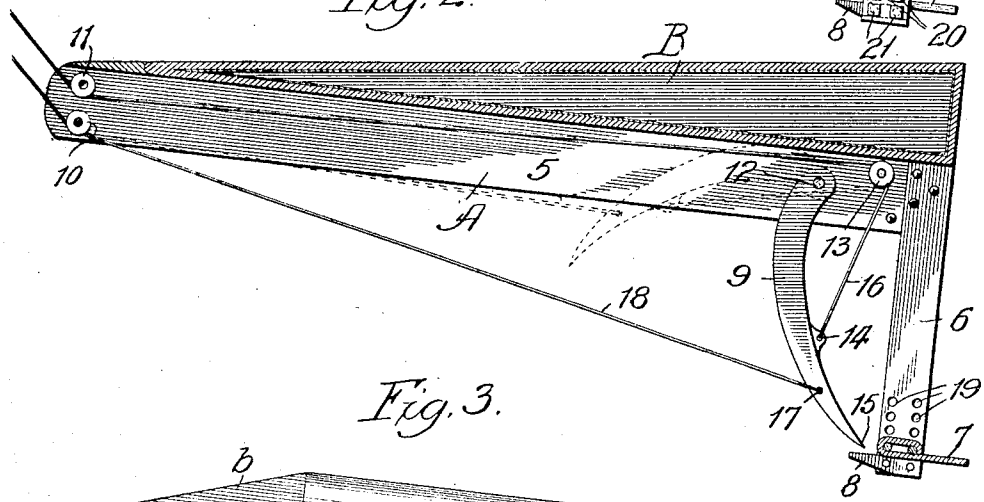

Fig. 2.

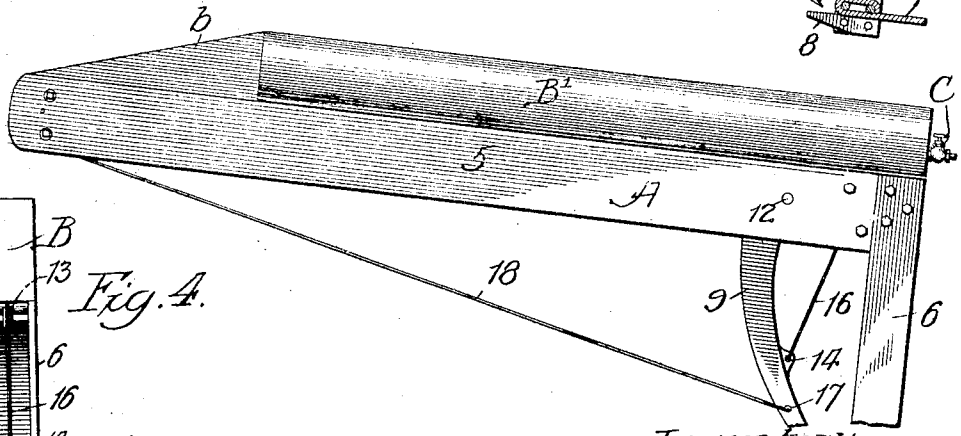

Fig. 3.

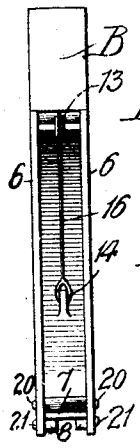

Fig. 4.

Witnesses:
John Enders
Chas. H. Buell

Inventor:
Frank J. Hathway
By Robert Cathinwood
Atty

THE NORRIS PETERS CO., WASHINGTON, D. C.

UNITED STATES PATENT OFFICE.

FRANK J. HATHWAY, OF CHICAGO, ILLINOIS.

DEVICE FOR RECOVERING SUBMERGED LOGS.

No. 882,310. Specification of Letters Patent. Patented March 17, 1908.

Application filed October 1, 1907. Serial No. 395,427.

To all whom it may concern:

Be it known that I, FRANK J. HATHWAY, a citizen of the United States, residing at Chicago, in the county of Cook and State of Illinois, have invented certain new and useful Improvements in Devices for Recovering Submerged Logs, of which the following is a specification, reference being had therein to the accompanying drawings.

My invention relates to devices for recovering submerged logs.

The object of the invention is to provide durable, economical and efficient means, readily adjustable to operate upon timber of various conditions and sizes and constructed to automatically right itself if deflected from operative position, for finding submerged logs and engaging them for hoisting to the surface of the water.

The device may be most conveniently used in connection with a windlass and boat by which it is drawn through bodies of water in which the logs are supposed to be submerged.

In the accompanying drawings I have shown a device embodying my invention in its preferred form and a device illustrating certain modifications thereof.

Figure 1 is a side view. Fig. 2 is a central sectional view showing the swinging hook in its closed position, its open position being indicated in dotted lines. Fig. 3 is a side view similar to Fig. 1, illustrating a device in which a modified form of buoy, a cylindrical air chamber, has been substituted for the form shown in the first mentioned figure. Fig. 4 is an end view of the device shown in Figs. 1 and 2.

In the drawings, A indicates a frame comprising two horizontal beam pieces or plates 5, preferably of wood, to the rear end of which are bolted, or otherwise rigidly attached, two vertical pieces or plates 6, carrying upon them, near their lower ends, one or more projecting shoes 7 and one or more pairs of sharp pointed dogs 8, adjustable and interchangeable vertically. These parts are preferably of metal, and may be secured either on the inside or outside of plates 6, as desired. The parts are maintained in proper position in the water, *i. e.*, right side up with the rear vertical plates projecting downwardly from the horizontal plates, by means of a buoy or air chamber B secured above the plates 5. I prefer to construct this buoy as shown in Figs. 1 and 2, in the form of a wedge shaped box, diminishing in capacity from rear to front. This buoy or air tight chamber is provided with a suitable air cock C, and tends to maintain the plates 5 in horizontal position. It is preferably constructed of boiler iron, but a wooden box, zinc or tinned lined, may be used to advantage.

In Fig. 3 a modified form of air chamber is shown. A cylindrical box B′ similar in construction to B is fastened above the plates 5 and to a taper head block *b* on the forward end of the device. Both of the above described constructions are adapted to hold the device in the horizontal position described and permit it to sink by gravity to the bottom. The buoyancy may be regulated by letting out or pumping in air through the cock *c*.

As above stated, the device normally rests at the bottom of the water with the top of the air chamber in horizontal position, but when power is applied to the forward end, it is trailed through the water at an angle resting on the shoe 7 or the end of plates 6. This places the dogs in an upwardly inclined position. Both the dogs 8 and shoe 7 are adjustable to different positions on plates 6 by means of registering openings 19 and threaded nuts and bolts, bolt 20 passing through the axis of shoe 7 and 21 into dogs 8. By this adjustment the angle at which the device stands on beam 5 may be varied as desired. Near the rear ends of the plates 5 is pivoted between them at 12 a swinging hook 9 and to the forward ends eyes or sheaves 10 and 11 are provided one above the other secured to the plates 5. Beyond the point 12, at the rear end of the plates 5, is provided a sheave or eye 13 and at the point 14, intermediate between the pivotal point 12 and the sharp end 15 of the hook 9, is provided an eye or clevis 14 to which is attached the cable 16. This cable passes over the eye or sheave 13 and under the eye or sheave 11 to a windlass or other suitable power (not shown). Intermediate of the eye or clevis 14 and the sharpened end 15 of the hook 9 is provided an eye or clevis 17 in which a cable 18 is secured, this cable passing under the eye or sheave 10 where it is attached to a windlass or other suitable power (not shown). On application of substantially the same power through cables 16 and 18 the device is trailed through the water without moving the hook

9, but when the tension becomes unequal on 16 and 18 the hook is moved backward or forward, one cable pulling against the other. As shown in the drawings the hook 9 cooperates with the plates 6 to form a log lock and may be swung out of the way between the pieces 5, as illustrated in dotted lines in Fig. 2.

The operation of my device is as follows: The amount of air in the buoy is first regulated and the machine placed in the water to be searched for submerged logs with the cables 16 and 18 attached to windlasses on a dock or in the stern of a boat. The device sinks by the weight of its metal parts, the buoy holding it right side up so that it finally rests on the bottom on the lower end of plates 6. Traction power being applied, the device stands at an angle, resting on the shoe 7. The shoe and dogs are interchangeable, the adjustment of the shoe limiting the depth the legs or dogs dig into the bottom. The cable 18 is drawn in and the cable 16 let out so as to swing the hook 9 into the position shown in dotted lines in Fig. 2. The sharp pointed dogs 8 being in advance of the plates 6 may first strike into the submerged log or they may miss it and pass under it and the plates 6 strike it first. In either event, as soon as the operator is aware of the impact, he lets out the cable 18, which suddenly transfers the entire strain to cable 16, thereby swinging the hook 9 sharply towards the plates 6 and sinking the point 75 into the log or under it, thus grasping the log between the hook and plates 6. The log is then brought to the surface by power exerted on the cables in the usual manner. The parts are all made detachable so that they may be readily replaced when broken.

I claim:

1. In a device for recovering submerged logs, a frame comprising horizontal and vertical pieces rigidly secured together at an angle one to the other, an air chamber secured on the top of said horizontal piece, a swinging hook on said frame coöperating with said vertical piece to grasp a log and means for swinging said hook alternately to and from said vertical piece, substantially as described.

2. In a device for recovering submerged logs, an air chamber having beam pieces fastened to the bottom thereof, downwardly projecting pieces rigidly secured to the rear of said beam pieces, an adjustable drag shoe on the rear of the lower portion of said downwardly projecting pieces, a dog on the front of the lower portion of said downwardly projecting pieces, a swinging hook pivoted to said beam pieces, sheaves or eyes, and cables adapted alternately to swing said hook away from said downwardly projecting pieces and into coöperation therewith to form a log lock, substantially as described.

3. In combination with an air chamber having a beam piece secured beneath it, downwardly projecting pieces adapted to strike objects in their path of travel, adjustable and interchangeable drag shoes and dogs thereon, said shoes being adapted to limit the depth said projecting piece may sink into the bottom and said dogs to engage submerged logs, substantially as described.

4. In combination with an air chamber having a beam piece secured beneath it, downwardly projecting pieces adapted to strike objects in their path of travel, a swinging hook adapted to coöperate with said downwardly projecting pieces to form a log lock, means for swinging said hook alternately in and out of such coöperation and for drawing said beam from its forward end, and a drag shoe on the rear of the lower portion of said downwardly projecting pieces adapted to limit the depth said legs may sink into the bottom or bed.

5. In combination with a frame comprising a horizontal beam and a vertical piece secured on one end thereof and a swinging hook, an air chamber secured above said frame, the buoyancy of said chamber being adapted normally to maintain said frame with its beam in horizontal position and permit said parts to sink gradually and an air cock in said chamber whereby the buoyancy of said chamber may be alternately increased or decreased, substantially as described.

6. In a device for recovering submerged logs, vertical pieces adapted to strike objects in their paths of travel, a horizontal beam having a swinging hook adapted to form the movable member of a log lock, means for maintaining the equilibrium of said parts, a shoe on the lower rear portion of said vertical pieces, means for adjusting said shoe to different heights thereon and cables attached to opposite sides of said hook and passing through sheaves on the forward end of said beam whereby said device may be trailed on the beds of bodies of water and said hook swung back and forth in and out of coöperation with said vertical pieces, substantially as described.

7. In a device for recovering submerged logs, a cylindrical air chamber, a beam secured to the bottom thereof, means for regulating the degree of buoyancy of said chamber, a swinging hook, a pair of vertical pieces at an angle to said beam rigidly secured to the rear end thereof, pairs of registering openings in the lower portion of said pieces, shoes projecting in the rear of said vertical pieces and means for securing them in any pair of said openings, substantially as described.

8. In a device for recovering submerged logs, a frame comprising horizontal and vertical beam pieces rigidly secured at the ends, an air chamber on top of said horizontal piece, and means coöperating with said ver-

tical piece to alternately grasp and release a log.

9. In a device for recovering submerged logs, an air chamber and beam secured to the bottom thereof, a vertical piece secured at an angle to said beam to the rear end thereof, a swinging hook, shoes projected in the rear of said vertical piece, and means for adjustably securing them at various heights on said vertical piece.

In testimony whereof I hereunto affix my signature in the presence of two witnesses.

FRANK J. HATHWAY.

Witnesses:

CHARLES L. HINE,

ARTHUR GREENE.