(12) INTERNATIONAL APPLICATION PUBLISHED UNDER THE PATENT COOPERATION TREATY (PCT)

(19) World Intellectual Property Organization
International Bureau

(43) International Publication Date
31 December 2003 (31.12.2003)

PCT

(10) International Publication Number
WO 2004/001708 A3

(51) International Patent Classification[7]: G09G 3/36

(21) International Application Number:
PCT/IB2003/002763

(22) International Filing Date: 17 June 2003 (17.06.2003)

(25) Filing Language: English

(26) Publication Language: English

(30) Priority Data:
02013872.3 22 June 2002 (22.06.2002) EP

(71) Applicant *(for all designated States except US)*: **KONINKLIJKE PHILIPS ELECTRONICS N.V.** [NL/NL]; Groenewoudseweg 1, NL-5621 BA Eindhoven (NL).

(72) Inventors; and

(75) Inventors/Applicants *(for US only)*: **SPEIRS, Christoper, Rodd** [DE/DE]; c/o Philips Intellectual Property & Standards GmbH, Weisshausstr. 2, 52066 Aachen (DE). **HASSELBERG, Wilfried** [DE/DE]; c/o Philips Intellectual Property & Standards GmbH, Weisshausstr. 2, 52066 Aachen (DE).

(74) Agent: **MEYER, Michael**; Philips Intellectual Property & Standards GmbH, Weisshausstr. 2, 52066 Aachen (DE).

(81) Designated States *(national)*: AE, AG, AL, AM, AT, AU, AZ, BA, BB, BG, BR, BY, BZ, CA, CH, CN, CO, CR, CU, CZ, DE, DK, DM, DZ, EC, EE, ES, FI, GB, GD, GE, GH, GM, HR, HU, ID, IL, IN, IS, JP, KE, KG, KP, KR, KZ, LC, LK, LR, LS, LT, LU, LV, MA, MD, MG, MK, MN, MW, MX, MZ, NI, NO, NZ, OM, PH, PL, PT, RO, RU, SC, SD, SE, SG, SK, SL, TJ, TM, TN, TR, TT, TZ, UA, UG, US, UZ, VC, VN, YU, ZA, ZM, ZW.

(84) Designated States *(regional)*: ARIPO patent (GH, GM, KE, LS, MW, MZ, SD, SL, SZ, TZ, UG, ZM, ZW), Eurasian patent (AM, AZ, BY, KG, KZ, MD, RU, TJ, TM), European patent (AT, BE, BG, CH, CY, CZ, DE, DK, EE, ES, FI, FR, GB, GR, HU, IE, IT, LU, MC, NL, PT, RO, SE, SI, SK, TR), OAPI patent (BF, BJ, CF, CG, CI, CM, GA, GN, GQ, GW, ML, MR, NE, SN, TD, TG).

Published:
— *with international search report*

[Continued on next page]

(54) **Title:** CIRCUIT ARRANGEMENT FOR A DISPLAY DEVICE WHICH CAN BE OPERATED IN A PARTIAL MODE

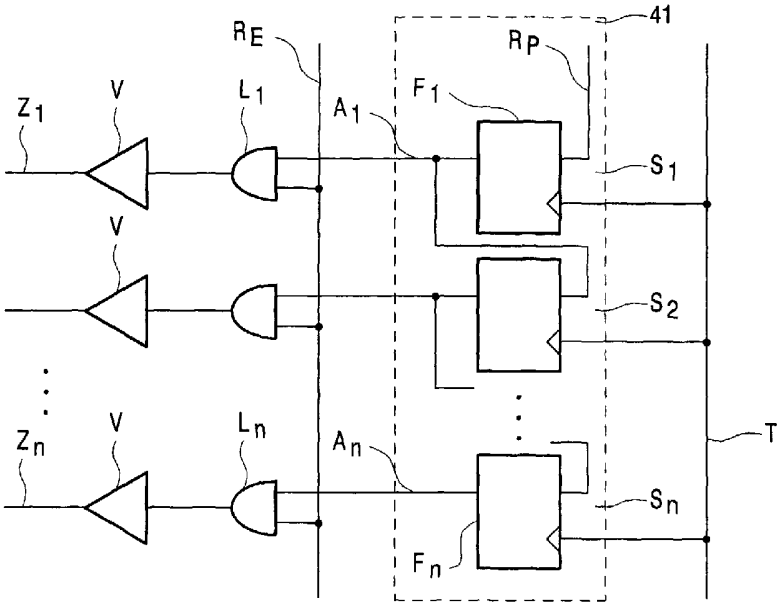

(57) **Abstract:** The invention relates to a circuit arrangement for controlling a display device (2) which can be operated in a partial mode, comprising a row drive circuit (4) for driving n rows of the display device (2) and a column drive circuit (3) for driving m columns of the display device, wherein the row drive circuit (4) controls the n rows of the display device sequentially from 1 to n, and the column drive circuit (3) supplies column voltages to the m columns, which voltages correspond to the picture data to be displayed of pixels of the controlled row. The invention further relates to a display device with such a circuit arrangement, a row drive circuit for a display device, an electronic appliance with a display device, and a method of realizing a partial mode. To keep the construction for realizing a partial mode simple, it is suggested that a logic function is connected in front of at least one output of the row drive circuit (4), to which function a first control signal (R_E) is supplied which achieves a deactivation of all row outputs (Z_1 to Z_n) of the row drive circuit (4) in the case of a row (Z_3, Z_4) that is not to be displayed, and an activation of all row outputs (Z_1 to Z_n) in the case of a row (Z_1, Z_2, Z_5) that is to be displayed. This renders it possible to realize a partial mode through the supply of only a single control signal (R_E) to the row drive circuit without the second control signal (R_P) necessary for controlling the rows having to be deactivated for the rows not to be displayed in the partial mode in the process of controlling the consecutive rows in the row drive circuit.

WO 2004/001708 A3

(88) Date of publication of the international search report:
25 March 2004

For two-letter codes and other abbreviations, refer to the "Guidance Notes on Codes and Abbreviations" appearing at the beginning of each regular issue of the PCT Gazette.

INTERNATIONAL SEARCH REPORT

In onal Application No
PCT/IB 03/02763

A. CLASSIFICATION OF SUBJECT MATTER
IPC 7 G09G3/36

According to International Patent Classification (IPC) or to both national classification and IPC

B. FIELDS SEARCHED

Minimum documentation searched (classification system followed by classification symbols)
IPC 7 G09G

Documentation searched other than minimum documentation to the extent that such documents are included in the fields searched

Electronic data base consulted during the international search (name of data base and, where practical, search terms used)
WPI Data, PAJ, EPO-Internal

C. DOCUMENTS CONSIDERED TO BE RELEVANT

Category °	Citation of document, with indication, where appropriate, of the relevant passages	Relevant to claim No.
A	US 6 137 481 A (PHILLIPPS JOHN QUENTIN) 24 October 2000 (2000-10-24) abstract; claims 1,2 column 3, line 9 - line 28; figure 3	1,12
A	EP 0 974 952 A (SEIKO EPSON CORP) 26 January 2000 (2000-01-26) abstract page 11, column 19, line 56 -column 20, line 47; figures 1,3 page 15, column 27, line 12 -column 28, line 39; figures 5,6	1,12
A	US 5 394 166 A (SHIMADA KAZUTOSHI) 28 February 1995 (1995-02-28) claims 1,4	1,12

-/--

[X] Further documents are listed in the continuation of box C.

[X] Patent family members are listed in annex.

° Special categories of cited documents :

"A" document defining the general state of the art which is not considered to be of particular relevance

"E" earlier document but published on or after the international filing date

"L" document which may throw doubts on priority claim(s) or which is cited to establish the publication date of another citation or other special reason (as specified)

"O" document referring to an oral disclosure, use, exhibition or other means

"P" document published prior to the international filing date but later than the priority date claimed

"T" later document published after the international filing date or priority date and not in conflict with the application but cited to understand the principle or theory underlying the invention

"X" document of particular relevance; the claimed invention cannot be considered novel or cannot be considered to involve an inventive step when the document is taken alone

"Y" document of particular relevance; the claimed invention cannot be considered to involve an inventive step when the document is combined with one or more other such documents, such combination being obvious to a person skilled in the art.

"&" document member of the same patent family

Date of the actual completion of the international search	Date of mailing of the international search report
26 November 2003	04/12/2003

Name and mailing address of the ISA	Authorized officer
European Patent Office, P.B. 5818 Patentlaan 2 NL – 2280 HV Rijswijk Tel. (+31–70) 340–2040, Tx. 31 651 epo nl, Fax: (+31–70) 340–3016	Wanzeele, R

Form PCT/ISA/210 (second sheet) (July 1992)

INTERNATIONAL SEARCH REPORT

Ir ıal Application No
PCT/IB 03/02763

C.(Continuation) DOCUMENTS CONSIDERED TO BE RELEVANT

Category °	Citation of document, with indication,where appropriate, of the relevant passages	Relevant to claim No.
A	EP 0 662 678 A (CASIO COMPUTER CO LTD) 12 July 1995 (1995-07-12) page 2, column 2, line 40 - line 46 page 3, column 4, line 11 - line 2 claims 1,2	1,12

Form PCT/ISA/210 (continuation of second sheet) (July 1992)

INTERNATIONAL SEARCH REPORT

Information on patent family members

International Application No
PCT/IB 03/02763

Patent document cited in search report		Publication date	Patent family member(s)			Publication date
US 6137481	A	24-10-2000	GB	2320591	A	24-06-1998
			GB	2320345	A ,B	17-06-1998
EP 0974952	A	26-01-2000	EP	0974952	A1	26-01-2000
			US	6522319	B1	18-02-2003
			CN	1262761	T	09-08-2000
			WO	9940561	A1	12-08-1999
			JP	2001125071	A	11-05-2001
			TW	530286	B	01-05-2003
			US	2002175887	A1	28-11-2002
US 5394166	A	28-02-1995	JP	2744841	B2	28-04-1998
			JP	4115288	A	16-04-1992
			JP	2760902	B2	04-06-1998
			JP	4219816	A	10-08-1992
			DE	69123407	D1	16-01-1997
			DE	69123407	T2	30-04-1997
			EP	0474231	A2	11-03-1992
EP 0662678	A	12-07-1995	JP	2759108	B2	28-05-1998
			JP	7199873	A	04-08-1995
			DE	69416580	D1	25-03-1999
			DE	69416580	T2	24-06-1999
			EP	0662678	A1	12-07-1995
			US	5724061	A	03-03-1998