Dec. 18, 1934. C. F. STODDARD 1,984,999

FAUCET

Filed July 24, 1933

Fig. 1.

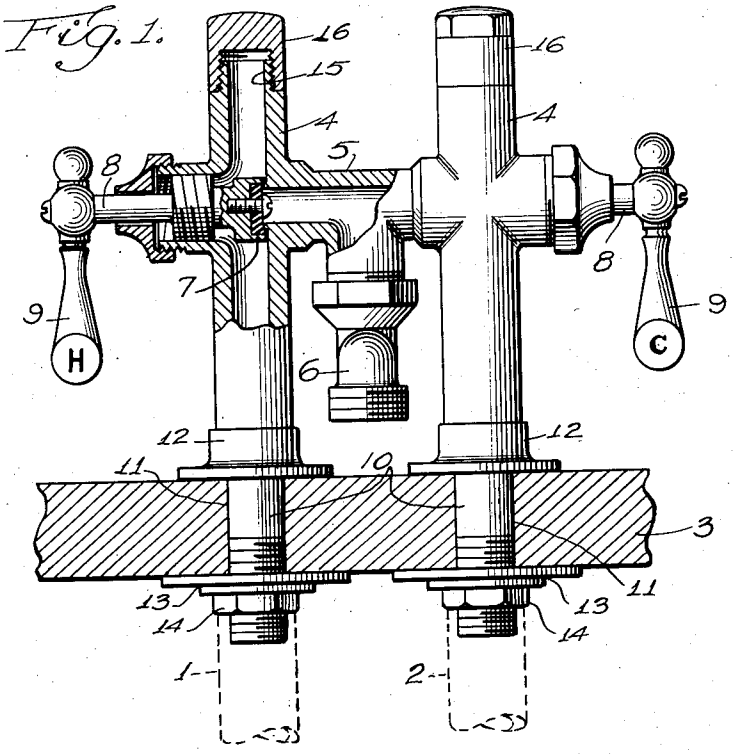

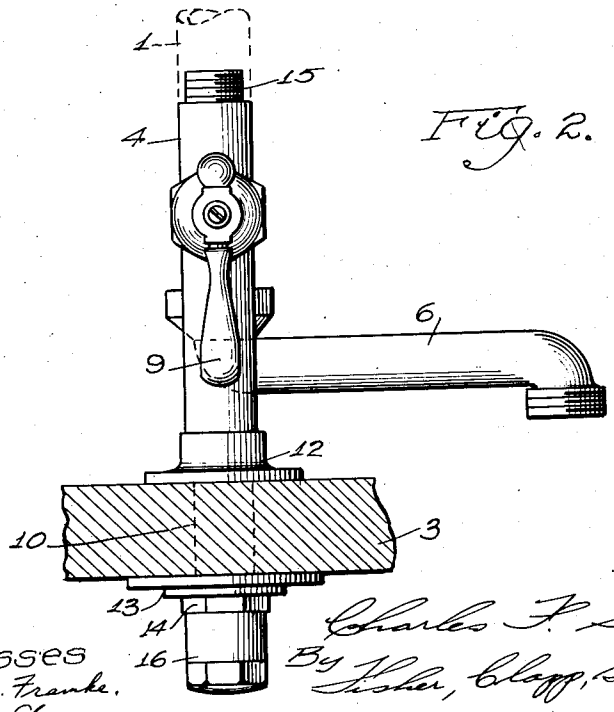

Fig. 2.

Witnesses
Arthur M. Franke.
H. E. Anderson.

Inventor
Charles F. Stoddard,
By Fisher, Clapp, Soans & Ford.
Attys:

Patented Dec. 18, 1934

1,984,999

UNITED STATES PATENT OFFICE

1,984,999

FAUCET

Charles F. Stoddard, Chicago, Ill., assignor to Robert S. Grogan, Chicago, Ill.

Application July 24, 1933, Serial No. 681,815

1 Claim. (Cl. 137—111)

This invention relates to water faucets.

Water faucets heretofore in common use have had only a single inlet for providing communication between the faucet and the water supply pipe and such inlets have not been uniformly positioned with respect to the faucet body because there is no uniformity as to the location of the supply pipe with respect to the tub, sink, or other receptacle to which the faucet is attached. In some fixtures, the supply pipe conducts the water upwardly and in others downwardly to the faucet and, for this reason, plumbers have been required to carry in stock faucets having inlets at the top and other faucets having inlets at the bottom. There has, therefore, been considerable objection to the old type of faucet having but a single inlet for communication with the supply pipe.

The main objects of this invention are to provide an improved form of faucet adapted to admit the water either at its upper or its lower end, thereby permitting its use in connection with various types of fixtures; to provide improved means for sealing the inlet of the faucet which is not to be used; and to provide a faucet of this kind which may be quickly and easily attached to or removed from the supply pipes by ordinary workmen who do not possess the skill of experienced plumbers.

An illustrative embodiment of this invention is shown in the accompanying drawing, wherein:—

Figure 1 is a side elevation of an improved faucet, partly broken away; a portion of the supporting structure being shown in section, and the two supply pipes being illustrated in dotted outline.

Figure 2 is a side elevation of the same taken from the left of Fig. 1 and showing the upper end of the faucet communicating with the liquid supply and its lower end sealed.

The faucet herein shown is of the double type for hot and cold water which is supplied to the faucet by the usual pipes 1 and 2. A portion of the tub, basin, or other fixture which supports the faucet is illustrated at 3.

In the form shown, the faucet comprises a pair of vertically disposed conduits 4 arranged in substantially parallel spaced relation and connected together by an outlet pipe 5 which supports a hinged spout 6.

The flow of water from the conduits 4 to the spout is controlled by a pair of axially alined valves 7 mounted on horizontally disposed stems 8 having the usual handles 9.

The lower ends of the conduits 4 are provided with reduced portions 10 for insertion through openings 11 in the support. Collars 12 are mounted on the conduits for engagement with one face of the support. Washers 13 and nuts 14 are mounted on the reduced portions 10 for clamping the faucet to the support.

The upper and lower ends of the conduits 4 are open so that either end may serve as inlet for communication with the water supply. If the supply pipes 1 and 2 are positioned above the faucet, the upper ends of the conduits 4 serve as inlets and for this purpose threaded nipples 15 are formed at the upper ends of the conduits for attachment to the supply pipes.

When the upper ends of the conduits 4 are connected to the supply pipes, the lower ends of the conduits are sealed by caps 16 which are adapted to be threaded on the reduced portions 10 as illustrated in Fig. 2. The reduced portions 10 are of the same diameter and have the same size threads as the nipples 15 so that, when the supply pipes are disposed below the faucet, they may be attached to the threaded portions 10 and, in that event, the caps 16 are threaded on the nipples 15 for sealing the upper ends of the conduits 4 as shown in Fig. 1.

Although but one specific embodiment of this invention has been herein shown and described, it will be understood that certain details of the construction shown may be altered without departing from the spirit of the invention as set forth in the following claim.

I claim:

A four-way combination hot and cold water faucet adapted for connection to either underlying or overhead water supply pipes, comprising laterally spaced vertical conduits each formed on its upper end with an externally threaded nipple and having a reduced externally threaded lower portion adapted to extend through a support, clamp nuts on said threaded lower portions, and a pair of internally threaded caps; said nipples and reduced lower portions being of uniform diameter and each adapted to engage either with said caps or with water supply pipes, a cross conduit connecting and communicating with said vertical conduits, a swiveled spout communicating with said cross conduit, and valves controlling communication of said vertical conduits with said cross conduit.

CHARLES F. STODDARD.