(12) INTERNATIONAL APPLICATION PUBLISHED UNDER THE PATENT COOPERATION TREATY (PCT)

(19) World Intellectual Property Organization
International Bureau

(43) International Publication Date
28 April 2011 (28.04.2011)

PCT

(10) International Publication Number
WO 2011/049967 A1

(51) International Patent Classification:
H01R 13/514 (2006.01) *H01Q 1/06* (2006.01)
H01R 13/703 (2006.01) *H01Q 1/14* (2006.01)
H01R 13/436 (2006.01)

(21) International Application Number:
PCT/US2010/053228

(22) International Filing Date:
19 October 2010 (19.10.2010)

(25) Filing Language: English

(26) Publication Language: English

(30) Priority Data:
61/252,964 19 October 2009 (19.10.2009) US
61/253,208 20 October 2009 (20.10.2009) US

(71) Applicant *(for all designated States except US)*: **ADC TELECOMMUNICATIONS, INC.** [US/US]; 13625 Technology Drive, Eden Prairie, MN 55344-2252 (US).

(72) Inventors; and
(75) Inventors/Applicants *(for US only)*: **TAYLOR, Chris** [GB/GB]; 29 Haycroft Close, Bishops Cleeve, Cheltenham Glos GL52 8SR (GB). **WHITE, Gordon, John** [GB/GB]; 17 Oxstalls Way, Longlevens, Gloucester, Gloucestershire GL2 9JF (GB). **HOATH, Alastair** [GB/GB]; 32 Providence Park, Princess Elizabeth Way, Cheltenham, Gloucestershire GL51 7NY (GB). **COFFEY, Joseph, Christopher** [US/US]; 2420 O'meara Court, Burnsville, MN 55306 (US). **MATTSON, Loren, J.** [US/US]; 6609 Emerson Avenue South, Richfield, MN 55423 (US). **SAND, Duane, R.** [US/US]; 9724 State Hwy 24 Nw, Annandale, MN 55302 (US).

(74) Agent: **BRUESS, Steven, C.**; Merchant & Gould P.C., P.O. Box 2903, Minneapolis, MN 55402-0903 (US).

(81) Designated States *(unless otherwise indicated, for every kind of national protection available)*: AE, AG, AL, AM, AO, AT, AU, AZ, BA, BB, BG, BH, BR, BW, BY, BZ, CA, CH, CL, CN, CO, CR, CU, CZ, DE, DK, DM, DO, DZ, EC, EE, EG, ES, FI, GB, GD, GE, GH, GM, GT, HN, HR, HU, ID, IL, IN, IS, JP, KE, KG, KM, KN, KP, KR, KZ, LA, LC, LK, LR, LS, LT, LU, LY, MA, MD, ME, MG, MK, MN, MW, MX, MY, MZ, NA, NG, NI, NO, NZ, OM, PE, PG, PH, PL, PT, RO, RS, RU, SC, SD, SE, SG, SK, SL, SM, ST, SV, SY, TH, TJ, TM, TN, TR, TT, TZ, UA, UG, US, UZ, VC, VN, ZA, ZM, ZW.

(84) Designated States *(unless otherwise indicated, for every kind of regional protection available)*: ARIPO (BW, GH, GM, KE, LR, LS, MW, MZ, NA, SD, SL, SZ, TZ, UG, ZM, ZW), Eurasian (AM, AZ, BY, KG, KZ, MD, RU, TJ, TM), European (AL, AT, BE, BG, CH, CY, CZ, DE, DK, EE, ES, FI, FR, GB, GR, HR, HU, IE, IS, IT, LT, LU, LV, MC, MK, MT, NL, NO, PL, PT, RO, RS, SE, SI, SK, SM, TR), OAPI (BF, BJ, CF, CG, CI, CM, GA, GN, GQ, GW, ML, MR, NE, SN, TD, TG).

[Continued on next page]

(54) Title: MANAGED ELECTRICAL CONNECTIVITY SYSTEMS

FIG. 8

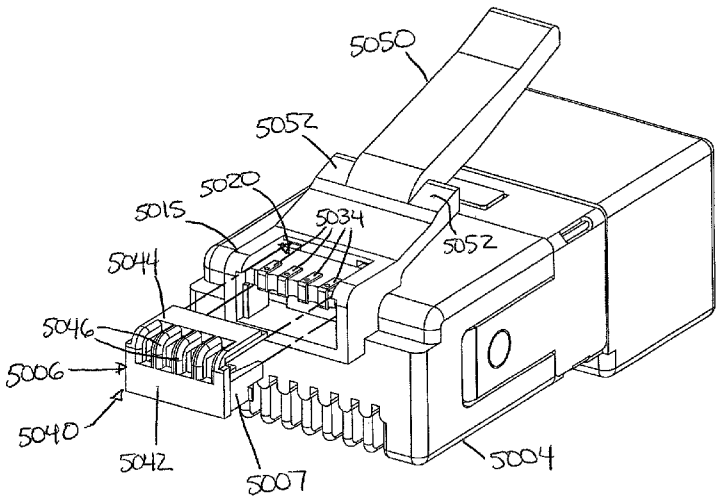

(57) Abstract: A connector arrangement (5000) includes a plug nose body (5004); a printed circuit board (5020) positioned within a cavity (5060) of the plug nose body; and a plug cover (5006) that mounts to the plug nose body to enclose the printed circuit board within the cavity. The printed circuit board includes a storage device (5030) configured to store information pertaining to the electrical segment of communications media. The plug cover defines a plurality of slotted openings through which the second contacts (5035) are exposed. A connector assembly includes a jack module (5110) and a media reading interface (5145) configured to receive the plug. A patch panel includes multiple jack modules and multiple media reading interfaces.

WO 2011/049967 A1

Published:

— *with international search report (Art. 21(3))*

— *before the expiration of the time limit for amending the claims and to be republished in the event of receipt of amendments (Rule 48.2(h))*

MANAGED ELECTRICAL CONNECTIVITY SYSTEMS

CROSS –REFERENCE TO RELATED APPLICATIONS

[0001] This application is being filed on 19 October 2010, as a PCT International Patent application in the name of ADC Telecommunications, Inc., a U.S. national corporation, applicant for the designation of all countries except the U.S., and Chris Taylor, a citizen of Great Britain, Gordon John White, a citizen of Great Britain, Alastair Hoath, a citizen of Great Britain, Joseph C. Coffey, a citizen of the U.S., Loren J. Mattson, a citizen of the U.S., and Duane R. Sand, a citizen of the U.S., applicants for the designation of the U.S. only, and claims priority to U.S. Patent Application Serial No. 61/252,964 filed on 19 October 2009 and U.S. Patent Application Serial No. 61/253,208 filed on 20 October 2009.

BACKGROUND

[0002] In communications infrastructure installations, a variety of communications devices can be used for switching, cross-connecting, and interconnecting communications signal transmission paths in a communications network. Some such communications devices are installed in one or more equipment racks to permit organized, high-density installations to be achieved in limited space available for equipment.

[0003] Communications devices can be organized into communications networks, which typically include numerous logical communication links between various items of equipment. Often a single logical communication link is implemented using several pieces of physical communication media. For example, a logical communication link between a computer and an inter-networking device such as a hub or router can be implemented as follows. A first cable connects the computer to a jack mounted in a wall. A second cable connects the wall-mounted jack to a port of a patch panel, and a third cable connects the inter-networking device to another port of a patch panel. A "patch cord" cross connects the two together. In other words, a single logical communication link is often implemented using several segments of physical communication media.

[0004] Network management systems (NMS) are typically aware of logical communication links that exist in a communications network, but typically do not have information about the specific physical layer media (e.g., the communications devices, cables, couplers, etc.) that are used to implement the logical communication links. Indeed, NMS systems typically do not have the ability to display or otherwise provide information about how logical communication links are implemented at the physical layer level.

SUMMARY

[0005] The present disclosure relates to communications connector assemblies and arrangements that provide physical layer management (PLM) capabilities. In accordance with certain aspects, the disclosure relates to connector arrangements having primary contact arrangements for communication signal transmission and secondary contact arrangements for management signal transmission.

BRIEF DESCRIPTION OF THE FIGURES

[0006] The accompanying drawings, which are incorporated in and constitute a part of the description, illustrate several aspects of the present disclosure. A brief description of the drawings is as follows:

[0007] FIG. 1 is a diagram of a portion of an example communications and data management system in accordance with aspects of the present disclosure;

[0008] FIG. 2 is a block diagram of one implementation of a communications management system that includes PLI functionality as well as PLM functionality in accordance with aspects of the present disclosure;

[0009] FIG. 3 is a block diagram of one high-level example of a port and media reading interface that are suitable for use in the management system of FIG. 2 in accordance with aspects of the present disclosure;

[0010] FIGS. 4-14 show an example of a connector arrangement in the form of a modular plug for terminating an electrical communications cable;

[0011] FIG. 15 shows one example plug being inserted into an example jack module, which is connected to an example media reading interface;

[0012] FIGS. 16-23 show an example connector assembly in the form of a jack module configured to receive the plug of FIGS. 4-14;

[0013] FIGS. 24-29 show an example media reading interface configured to connect to the jack module of FIGS. 16-23;

[0014] FIG. 30 is a perspective view showing a plug inserted within a socket of a jack module with the bodies of the jack module and media reading interface substantially removed from view so that the connections between the various contact members are visible;

[0015] FIG. 31 shows one example plug being inserted into an example jack module, which is connected to an example media reading interface, where a main housing of the media reading interface has been removed so that second contacts and a shorting pin are visible;

[0016] FIG. 32 is a cross-sectional view of FIG. 30 with the bodies of the jack module and media reading interfaces shown;

[0017] FIG. 33-51 show a first example patch panel holding one or more jack modules and media reading interfaces in a single row in accordance with aspects of the present disclosure;

[0018] FIGS. 52-60 show a second example patch panel holding one or more jack modules and media reading interfaces in multiple rows in accordance with aspects of the present disclosure;

[0019] FIGS. 61-71 show a third example patch panel holding one or more jack modules and media reading interfaces in multiple rows in accordance with aspects of the present disclosure; and

[0020] FIGS. 72-78 show a fourth example patch panel holding one or more jack modules and media reading interfaces in multiple rows in accordance with aspects of the present disclosure.

DETAILED DESCRIPTION

[0021] FIG. 1 is a diagram of a portion of an example communications and data management system 100. The example system 100 shown in FIG. 1 includes a part of a communications network 101 along which communications signals S1 pass. In one example implementation, the network 101 can include an Internet Protocol network. In other implementations, however, the communications network 101 may include other types of networks.

[0022] The communications network 101 includes interconnected network components (e.g., connector assemblies, inter-networking devices, internet working devices, servers, outlets, and end user equipment (e.g., computers)). In one example implementation, communications signals S1 pass from a computer to a wall outlet to a port of communication panel, to a first port of an inter-networking device, out another port of the inter-networking device, to a port of the same or another communications panel, to a rack mounted server.

[0023] The portion of the communications network 101 shown in FIG. 1 includes first and second connector assemblies 130, 130' at which communications signals S1 pass from one portion of the communications network 101 to another portion of the communications network 101. Non-limiting examples of connector assemblies 130, 130' include, for example, rack-mounted connector assemblies (e.g., patch panels, distribution units, and media converters for fiber and copper physical communication media), wall-mounted connector assemblies (e.g., boxes, jacks, outlets, and media converters for fiber and copper physical communication media), and inter-networking devices (e.g., switches, routers, hubs, repeaters, gateways, and access points). In the example shown, the first connector assembly 130 defines at least one port 132 configured to communicatively couple at least a first media segment 105 to at least a second media segment 115 to enable the communication signals S1 to pass between the media segments 105, 115.

[0024] The at least one port 132 of the first connector assembly 130 may be directly connected to a port 132' of the second connector assembly 130'. As the term is used herein, the port 132 is directly connected to the port 132' when the communications signals S1 pass between the two ports 132, 132' without passing through an

intermediate port. For example, routing a patchcord between port 132 and port 132' directly connects the ports 132, 132'.

[0025] The port 132 of the first connector assembly 130 also may be indirectly connected to the port 132' of the second connector assembly 130'. As the term is used herein, the port 132 is indirectly connected to the port 132' when the communications signals S1 pass through an intermediate port when traveling between the ports 132, 132'. For example, in one implementation, the communications signals S1 may be routed over one media segment from the port 132 at the first connector assembly 130 to a port of a third connector assembly at which the media segment is coupled to another media segment that is routed from the port of the third connector assembly to the port 132' of the second connector assembly 130'.

[0026] Non-limiting examples of media segments include optical fibers, which carry optical data signals, and electrical conductors (e.g., CAT-5, 6, and 7 twisted-pair cables), which carry electrical data signals. Media segments also can include electrical plugs, fiber optic connectors (e.g., SC, LC, FC, LX.5, or MPO connectors), adapters, media converters, and other physical components terminating to the fibers, conductors, or other such media segments. The techniques described here also can be used with other types of connectors including, for example, BNC connectors, F connectors, DSX jacks and plugs, bantam jacks and plugs.

[0027] In the example shown, each media segment 105, 115 is terminated at a plug or connector 110, 120, respectively, which is configured to communicatively connect the media segments 105, 115. For example, in one implementation, the port 132 of the connector assembly 130 can be configured to align ferrules of two fiber optic connectors 110, 120. In another implementation, the port 132 of the connector assembly 130 can be configured to electrically connect an electrical plug with an electrical socket (e.g., a jack). In yet another implementation, the port 132 can include a media converter configured to connect an optical fiber to an electrical conductor.

[0028] In accordance with some aspects, the connector assembly 130 does not actively manage (e.g., is passive with respect to) the communications signals S1

passing through port 132. For example, in some implementations, the connector assembly 130 does not modify the communications signal S1 carried over the media segments 105, 115. Further, in some implementations, the connector assembly 130 does not read, store, or analyze the communications signal S1 carried over the media segments 105, 115.

[0029] In accordance with aspects of the disclosure, the communications and data management system 100 also provides physical layer information (PLI) functionality as well as physical layer management (PLM) functionality. As the term is used herein, "PLI functionality" refers to the ability of a physical component or system to identify or otherwise associate physical layer information with some or all of the physical components used to implement the physical layer of the system. As the term is used herein, "PLM functionality" refers to the ability of a component or system to manipulate or to enable others to manipulate the physical components used to implement the physical layer of the system (e.g., to track what is connected to each component, to trace connections that are made using the components, or to provide visual indications to a user at a selected component).

[0030] As the term is used herein, "physical layer information" refers to information about the identity, attributes, and/or status of the physical components used to implement the physical layer of the communications system 101. In accordance with some aspects, physical layer information of the communications system 101 can include media information, device information, and location information.

[0031] As the term is used herein, "media information" refers to physical layer information pertaining to cables, plugs, connectors, and other such media segments. In accordance with some aspects, the media information is stored on or in the media segments, themselves. In accordance with other aspects, the media information can be stored at one or more data repositories for the communications system, either alternatively or in addition to the media, themselves. Non-limiting examples of media information include a part number, a serial number, a plug or other connector type, a conductor or fiber type, a cable or fiber length, cable polarity, a cable or fiber pass-through capacity, a date of manufacture, a manufacturing lot number, information about one or more visual attributes of physical communication media

(e.g., information about the color or shape of the physical communication media or an image of the physical communication media), and an insertion count (i.e., a record of the number of times the media segment has been connected to another media segment or network component). Media information also can include testing or media quality or performance information. The testing or media quality or performance information, for example, can be the results of testing that is performed when a particular segment of media is manufactured.

[0032] As the term is used herein, "device information" refers to physical layer information pertaining to the communications panels, inter-networking devices, media converters, computers, servers, wall outlets, and other physical communications devices to which the media segments attach. In accordance with some aspects, the device information is stored on or in the devices, themselves. In accordance with other aspects, the device information can be stored at one or more data repositories for the communications system, either alternatively or in addition to the devices, themselves. Non-limiting examples of device information include a device identifier, a device type, port priority data (that associates a priority level with each port), and port updates (described in more detail herein).

[0033] As the term is used herein, "location information" refers to physical layer information pertaining to a physical layout of a building or buildings in which the network 101 is deployed. Location information also can include information indicating where each communications device, media segment, network component, or other component that is physically located within the building. In accordance with some aspects, the location information of each system component is stored on or in the respective component. In accordance with other aspects, the location information can be stored at one or more data repositories for the communications system, either alternatively or in addition to the system components, themselves.

[0034] In accordance with some aspects, one or more of the components of the communications network 101 is configured to store physical layer information pertaining to the component as will be disclosed in more detail herein. In FIG. 1, the connectors 110, 120, the media segments 105, 115, and/or the connector assemblies 130, 130' may store physical layer information. For example, in FIG. 1, each connector 110, 120 may store information pertaining to itself (e.g., type of

connector, data of manufacture, etc.) and/or to the respective media segment 105, 115 (e.g., type of media, test results, etc.).

[0035] In another example implementation, the media segments 105, 115 or connectors 110, 120 may store media information that includes a count of the number of times that the media segment (or connector) has been inserted into port 132. In such an example, the count stored in or on the media segment is updated each time the segment (or plug or connector) is inserted into port 132. This insertion count value can be used, for example, for warranty purposes (e.g., to determine if the connector has been inserted more than the number of times specified in the warranty) or for security purposes (e.g., to detect unauthorized insertions of the physical communication media).

[0036] In accordance with certain aspects, one or more of the components of the communications network 101 also can read the physical layer information from one or more media segments retained thereat. In certain implementations, one or more network components includes a media reading interface that is configured to read physical layer information stored on or in the media segments or connectors attached thereto. For example, in one implementation, the connector assembly 130 includes a media reading interface 134 that can read media information stored on the media cables 105, 115 retained within the port 132. In another implementation, the media reading interface 134 can read media information stored on the connectors or plugs 110, 120 terminating the cables 105, 115, respectively.

[0037] In some implementations, some types of physical layer information can be obtained by the connector assembly 130 from a user at the connector assembly 130 via a user interface (e.g., a keypad, a scanner, a touch screen, buttons, etc.). The connector assembly 130 can provide the physical layer information obtained from the user to other devices or systems that are coupled to the network 101 (as described in more detail herein). In other implementations, some or all physical layer information can be obtained by the connector assembly 130 from other devices or systems that are coupled to the network 101. For example, physical layer information pertaining to media that is not configured to store such information can be entered manually into another device or system that is coupled to the network 101

(e.g., at the connector assembly 130, at the computer 160, or at the aggregation point 150).

[0038] In some implementations, some types of non-physical layer information (e.g., network information) can be obtained by one network component from other devices or systems that are coupled to the network 101. For example, the connector assembly 130 may pull non-physical layer information from one or more components of the network 101. In other implementations, the non-physical layer information can be obtained by the connector assembly 130 from a user at the connector assembly 130.

[0039] In accordance with some aspects of the disclosure, the physical layer information read by a network component may be processed or stored at the component. For example, in certain implementations, the first connector assembly 130 shown in FIG. 1 is configured to read physical layer information stored on the connectors 110, 120 and/or on the media segments 105, 115 using media reading interface 134. Accordingly, in FIG. 1, the first connector assembly 130 may store not only physical layer information about itself (e.g., the total number of available ports at that assembly 130, the number of ports currently in use, etc.), but also physical layer information about the connectors 110, 120 inserted at the ports and/or about the media segments 105, 115 attached to the connectors 110, 120.

[0040] In some implementations, the connector assembly 130 is configured to add, delete, and/or change the physical layer information stored in or on the segment of physical communication media 105, 115 (i.e., or the associated connectors 110, 120). For example, in some implementations, the media information stored in or on the segment of physical communication media 105, 115 can be updated to include the results of testing that is performed when a segment of physical media is installed or otherwise checked. In other implementations, such testing information is supplied to the aggregation point 150 for storage and/or processing. In some implementations, modification of the physical layer information does not affect the communications signals S1 passing through the connector assembly 130.

[0041] In other implementations, the physical layer information obtained by the media reading interface (e.g., interface 134 of FIG. 1) may be communicated (see

PLI signals S2) over the network 101 for processing and/or storage. The components of the communications network 101 are connected to one or more aggregation devices 150 (described in greater detail herein) and/or to one or more computing systems 160. For example, in the implementation shown in FIG. 1, each connector assembly 130 includes a PLI port 136 that is separate from the "normal" ports 132 of the connector assembly 130. Physical layer information is communicated between the connector assembly 130 and the network 101 through the PLI port 136. In the example shown in FIG. 1, the connector assembly 130 is connected to a representative aggregation device 150, a representative computing system 160, and to other components of the network 101 (see looped arrow) via the PLI port 136.

[0042] The physical layer information is communicated over the network 101 just like any other data that is communicated over the network 101, while at the same time not affecting the communication signals S1 that pass through the connector assembly 130 on the normal ports 132. Indeed, in some implementations, the physical layer information may be communicated as one or more of the communication signals S1 that pass through the normal ports 132 of the connector assemblies 130, 130'. For example, in one implementation, a media segment may be routed between the PLI port 136 and one of the "normal" ports 132. In such an implementation, the physical layer information may be passed along the communications network 101 to other components of the communications network 101 (e.g., to the one or more aggregation points 150 and/or to the one or more computer systems 160). By using the network 101 to communicate physical layer information pertaining to it, an entirely separate network need not be provided and maintained in order to communicate such physical layer information.

[0043] In other implementations, however, the communications network 101 includes a data network along which the physical layer information described above is communicated. At least some of the media segments and other components of the data network may be separate from those of the communications network 101 to which such physical layer information pertains. For example, in some implementations, the first connector assembly 130 may include a plurality of fiber optic adapters defining ports at which connectorized optical fibers are optically

coupled together to create an optical path for communications signals S1. The first connector assembly 130 also may include one or more electrical cable ports at which the physical layer information (see PLI signals S2) are passed to other parts of the data network. (e.g., to the one or more aggregation points 150 and/or to the one or more computer systems 160).

[0044] FIG. 2 is a block diagram of one example implementation of a communications management system 200 that includes PLI functionality as well as PLM functionality. The management system 200 comprises a plurality of connector assemblies 202. The system 200 includes one or more connector assemblies 202 connected to an IP network 218. The connector assemblies 202 shown in FIG. 2 illustrate various implementations of the connector assembly 130 of FIG. 1.

[0045] Each connector assembly 202 includes one or more ports 204, each of which is used to connect two or more segments of physical communication media to one another (e.g., to implement a portion of a logical communication link for communication signals S1 of FIG. 1). At least some of the connector assemblies 202 are designed for use with segments of physical communication media that have physical layer information stored in or on them. The physical layer information is stored in or on the segment of physical communication media in a manner that enables the stored information, when the segment is attached to a port 204, to be read by a programmable processor 206 associated with the connector assembly 202.

[0046] In the particular implementation shown in FIG. 2, each of the ports 204 of the connector assemblies 202 comprises a respective media reading interface 208 via which the respective programmable processor 206 is able to determine if a physical communication media segment is attached to that port 204 and, if one is, to read the physical layer information stored in or on the attached segment (if such media information is stored therein or thereon). The programmable processor 206 associated with each connector assembly 202 is communicatively coupled to each of the media reading interfaces 208 using a suitable bus or other interconnect (not shown).

[0047] In the particular implementation shown in FIG. 2, four example types of connector assembly configurations are shown. In the first connector assembly

configuration 210 shown in FIG. 2, each connector assembly 202 includes its own respective programmable processor 206 and its own respective network interface 216 that is used to communicatively couple that connector assembly 202 to an Internet Protocol (IP) network 218.

[0048] In the second type of connector assembly configuration 212, a group of connector assemblies 202 are physically located near each other (e.g., in a bay or equipment closet). Each of the connector assemblies 202 in the group includes its own respective programmable processor 206. However, in the second connector assembly configuration 212, some of the connector assemblies 202 (referred to here as "interfaced connector assemblies") include their own respective network interfaces 216 while some of the connector assemblies 202 (referred to here as "non-interfaced connector assemblies") do not. The non-interfaced connector assemblies 202 are communicatively coupled to one or more of the interfaced connector assemblies 202 in the group via local connections. In this way, the non-interfaced connector assemblies 202 are communicatively coupled to the IP network 218 via the network interface 216 included in one or more of the interfaced connector assemblies 202 in the group. In the second type of connector assembly configuration 212, the total number of network interfaces 216 used to couple the connector assemblies 202 to the IP network 218 can be reduced. Moreover, in the particular implementation shown in FIG. 2, the non-interfaced connector assemblies 202 are connected to the interfaced connector assembly 202 using a daisy chain topology (though other topologies can be used in other implementations and embodiments).

[0049] In the third type of connector assembly configuration 214, a group of connector assemblies 202 are physically located near each other (e.g., within a bay or equipment closet). Some of the connector assemblies 202 in the group (also referred to here as "master" connector assemblies 202) include both their own programmable processors 206 and network interfaces 216, while some of the connector assemblies 202 (also referred to here as "slave" connector assemblies 202) do not include their own programmable processors 206 or network interfaces 216. Each of the slave connector assemblies 202 is communicatively coupled to one or more of the master connector assemblies 202 in the group via one or more local

connections. The programmable processor 206 in each of the master connector assemblies 202 is able to carry out the PLM functions for both the master connector assembly 202 of which it is a part and any slave connector assemblies 202 to which the master connector assembly 202 is connected via the local connections. As a result, the cost associated with the slave connector assemblies 202 can be reduced. In the particular implementation shown in FIG. 2, the slave connector assemblies 202 are connected to a master connector assembly 202 in a star topology (though other topologies can be used in other implementations and embodiments).

[0050] Each programmable processor 206 is configured to execute software or firmware that causes the programmable processor 206 to carry out various functions described below. Each programmable processor 206 also includes suitable memory (not shown) that is coupled to the programmable processor 206 for storing program instructions and data. In general, the programmable processor 206 determines if a physical communication media segment is attached to a port 204 with which that processor 206 is associated and, if one is, to read the identifier and attribute information stored in or on the attached physical communication media segment (if the segment includes such information stored therein or thereon) using the associated media reading interface 208.

[0051] In the fourth type of connector assembly configuration 215, a group of connector assemblies 202 are housed within a common chassis or other enclosure. Each of the connector assemblies 202 in the configuration 215 includes their own programmable processors 206. In the context of this configuration 215, the programmable processors 206 in each of the connector assemblies are "slave" processors 206. Each of the slave programmable processor 206 is also communicatively coupled to a common "master" programmable processor 217 (e.g., over a backplane included in the chassis or enclosure). The master programmable processor 217 is coupled to a network interface 216 that is used to communicatively couple the master programmable processor 217 to the IP network 218.

[0052] In this configuration 215, each slave programmable processor 206 is configured to determine if physical communication media segments are attached to its port 204 and to read the physical layer information stored in or on the attached physical communication media segments (if the attached segments have such

information stored therein or thereon) using the associated media reading interfaces 208. The physical layer information is communicated from the slave programmable processor 206 in each of the connector assemblies 202 in the chassis to the master processor 217. The master processor 217 is configured to handle the processing associated with communicating the physical layer information read from by the slave processors 206 to devices that are coupled to the IP network 218.

[0053] The system 200 includes functionality that enables the physical layer information that the connector assemblies 202 capture to be used by application-layer functionality outside of the traditional physical-layer management application domain. That is, the physical layer information is not retained in a PLM "island" used only for PLM purposes but is instead made available to other applications. In the particular implementation shown in FIG. 2, the management system 200 includes an aggregation point 220 that is communicatively coupled to the connector assemblies 202 via the IP network 218.

[0054] The aggregation point 220 includes functionality that obtains physical layer information from the connector assemblies 202 (and other devices) and stores the physical layer information in a data store. The aggregation point 220 can be used to receive physical layer information from various types of connector assemblies 202 that have functionality for automatically reading information stored in or on the segment of physical communication media. Also, the aggregation point 220 and aggregation functionality 224 can be used to receive physical layer information from other types of devices that have functionality for automatically reading information stored in or on the segment of physical communication media. Examples of such devices include end-user devices – such as computers, peripherals (e.g., printers, copiers, storage devices, and scanners), and IP telephones – that include functionality for automatically reading information stored in or on the segment of physical communication media.

[0055] The aggregation point 220 also can be used to obtain other types of physical layer information. For example, in this implementation, the aggregation point 220 also obtains information about physical communication media segments that is not otherwise automatically communicated to an aggregation point 220. This information can be provided to the aggregation point 220, for example, by manually

entering such information into a file (e.g., a spreadsheet) and then uploading the file to the aggregation point 220 (e.g., using a web browser) in connection with the initial installation of each of the various items. Such information can also, for example, be directly entered using a user interface provided by the aggregation point 220 (e.g., using a web browser).

[0056] The aggregation point 220 also includes functionality that provides an interface for external devices or entities to access the physical layer information maintained by the aggregation point 220. This access can include retrieving information from the aggregation point 220 as well as supplying information to the aggregation point 220. In this implementation, the aggregation point 220 is implemented as "middleware" that is able to provide such external devices and entities with transparent and convenient access to the PLI maintained by the access point 220. Because the aggregation point 220 aggregates PLI from the relevant devices on the IP network 218 and provides external devices and entities with access to such PLI, the external devices and entities do not need to individually interact with all of the devices in the IP network 218 that provide PLI, nor do such devices need to have the capacity to respond to requests from such external devices and entities.

[0057] For example, as shown in FIG. 2, a network management system (NMS) 230 includes PLI functionality 232 that is configured to retrieve physical layer information from the aggregation point 220 and provide it to the other parts of the NMS 230 for use thereby. The NMS 230 uses the retrieved physical layer information to perform one or more network management functions. The NMS 230 communicates with the aggregation point 220 over the IP network 218.

[0058] As shown in FIG. 2, an application 234 executing on a computer 236 can also use the API implemented by the aggregation point 220 to access the PLI information maintained by the aggregation point 220 (e.g., to retrieve such information from the aggregation point 220 and/or to supply such information to the aggregation point 220). The computer 236 is coupled to the IP network 218 and accesses the aggregation point 220 over the IP network 218.

[0059] In the example shown in FIG. 2, one or more inter-networking devices 238 used to implement the IP network 218 include physical layer information (PLI) functionality 240. The PLI functionality 240 of the inter-networking device 238 is configured to retrieve physical layer information from the aggregation point 220 and use the retrieved physical layer information to perform one or more inter-networking functions. Examples of inter-networking functions include Layer 1, Layer 2, and Layer 3 (of the OSI model) inter-networking functions such as the routing, switching, repeating, bridging, and grooming of communication traffic that is received at the inter-networking device.

[0060] The aggregation point 220 can be implemented on a standalone network node (e.g., a standalone computer running appropriate software) or can be integrated along with other network functionality (e.g., integrated with an element management system or network management system or other network server or network element). Moreover, the functionality of the aggregation point 220 can be distribute across many nodes and devices in the network and/or implemented, for example, in a hierarchical manner (e.g., with many levels of aggregation points). The IP network 218 can include one or more local area networks and/or wide area networks (e.g., the Internet). As a result, the aggregation point 220, NMS 230, and computer 236 need not be located at the same site as each other or at the same site as the connector assemblies 202 or the inter-networking devices 238.

[0061] Also, power can be supplied to the connector assemblies 202 using conventional "Power over Ethernet" techniques specified in the IEEE 802.3af standard, which is hereby incorporated herein by reference. In such an implementation, a power hub 242 or other power supplying device (located near or incorporated into an inter-networking device that is coupled to each connector assembly 202) injects DC power onto one or more of the wires (also referred to here as the "power wires") included in the copper twisted-pair cable used to connect each connector assembly 202 to the associated inter-networking device.

[0062] FIG. 3 is a schematic diagram of one example connection system 300 including a connector assembly 320 configured to collect physical layer information from a connector arrangement 310. The example connection system 300 shown includes a jack module 320 and an electrical plug 310. The connector arrangement

310 terminates at least a first electrical segment (e.g., a conductor cable) 305 of physical communications media and the connector assembly 320 terminates at least second electrical segments (e.g., twisted pairs of copper wires) 329 of physical communications media. The connector assembly 320 defines at least one socket port 325 in which the connector arrangement 310 can be accommodated.

[0063] Each electrical segment 305 of the connector arrangement 310 carries communication signals (e.g., communications signals S1 of FIG. 1) to primary contact members 312 on the connector arrangement 310. The connector assembly 320 includes a primary contact arrangement 322 that is accessible from the socket port 325. The primary contact arrangement 322 is aligned with and configured to interface with the primary contact members 312 to receive the communications signals (S1 of FIG. 1) from the primary contact members 312 when the connector arrangement 310 is inserted into the socket 325 of the connector assembly 320.

[0064] The connector assembly 320 is electrically coupled to one or more printed circuit boards. For example, the connector assembly 320 can support or enclose a first printed circuit board 326, which connects to insulation displacement contacts (IDCs) 327 or to another type of electrical contacts. The IDCs 327 terminate the electrical segments 329 of physical communications media (e.g., conductive wires). The first printed circuit board 326 manages the primary communication signals carried from the conductors terminating the cable 305 to the electrical segments 329 that couple to the IDCs 327.

[0065] In accordance with some aspects, the connector arrangement 310 can include a storage device 315 configured to store physical layer information. The connector arrangement 310 also includes second contact members 314 that are electrically coupled (i.e., or otherwise communicatively coupled) to the storage device 315. In one implementation, the storage device 315 is implemented using an EEPROM (e.g., a PCB surface-mount EEPROM). In other implementations, the storage device 315 is implemented using other non-volatile memory device. Each storage device 315 is arranged and configured so that it does not interfere or interact with the communications signals communicated over the media segment 305.

[0066] The connector assembly 320 also includes a second contact arrangement (e.g., a media reading interface) 324. In certain implementations, the media reading interface 324 is accessible through the socket port 325. The second contact arrangement 324 is aligned with and configured to interface with the second contact members 314 of the media segment to receive the physical layer information from the storage device 315 when the connector arrangement 310 is inserted into the socket 325 of the connector assembly 320.

[0067] In some such implementations, the storage device interfaces 314 and the media reading interfaces 324 each comprise three (3) leads -- a power lead, a ground lead, and a data lead. The three leads of the storage device interface 314 come into electrical contact with three (3) corresponding leads of the media reading interface 324 when the corresponding media segment is inserted in the corresponding port 325. In certain example implementations, a two-line interface is used with a simple charge pump. In still other implementations, additional leads can be provided (e.g., for potential future applications). Accordingly, the storage device interfaces 314 and the media reading interfaces 324 may each include four (4) leads, five (5) leads, six (6) leads, etc.

[0068] The storage device 315 also may include a processor or micro-controller, in addition to the storage for the physical layer information. In some example implementations, the micro-controller can be used to execute software or firmware that, for example, performs an integrity test on the cable 305 (e.g., by performing a capacitance or impedance test on the sheathing or insulator that surrounds the cable 305, (which may include a metallic foil or metallic filler for such purposes)). In the event that a problem with the integrity of the cable 305 is detected, the micro-controller can communicate that fact to a programmable processor (e.g., processor 206 of FIG. 2) associated with the port using the storage device interface (e.g., by raising an interrupt). The micro-controller also can be used for other functions.

[0069] The connector assembly 320 also can support or enclose a second printed circuit board 328, which connects to the second contact arrangement 324. The second printed circuit board 328 manages the physical layer information communicated from a storage device 315 through second contacts 314, 324. In the example shown, the second printed circuit board 328 is positioned on an opposite

side of the connector assembly 320 from the first printed circuit board 326. In other implementations, the printed circuit boards 326, 328 can be positioned on the same side or on different sides. In one implementation, the second printed circuit board 328 is positioned horizontally relative to the connector assembly 320 (see FIG. 3). In another implementation, the second printed circuit board 328 is positioned vertically relative to the connector assembly 320.

[0070] The second printed circuit board 328 can be communicatively connected to one or more programmable electronic processors and/or one or more network interfaces. In one implementation, one or more such processors and interfaces can be arranged as components on the printed circuit board 328. In another implementation, one of more such processor and interfaces can be arranged on a separate circuit board that is coupled to the second printed circuit board 328. For example, the second printed circuit board 328 can couple to other circuit boards via a card edge type connection, a connector-to-connector type connection, a cable connection, etc. The network interface is configured to send the physical layer information to the data network (e.g., see signals S2 o f FIG. 1).

[0071] FIGS. 4-78 provide example implementations of physical layer management networks and components for electrical (e.g., copper) communications applications. FIGS. 4-14 show an example of a connector arrangement 5000 in the form of a modular plug 5002 for terminating an electrical communications cable 5090. The connector arrangement 5000 is configured to be received within a port of a connector assembly as will be described in more detail herein. In accordance with one aspect, the connector arrangement 5000 includes a plug 5002, such as an RJ plug, that connects to the end of an electrical segment of communications media, such as twisted pair copper cable 5090.

[0072] The plug 5002 includes a wire manager 5008 for managing the twisted wire pairs and a strain relief boot 5010, which snaps to the plug 5002 (see FIGS. 4 and 5). For example, the plug 5002 defines openings 5005 in which lugs 5009 on the wire manager 5008 can latch (see FIG. 13). FIGS. 12-14 show details of one example wire manager 5008 and boot 5010 suitable for use with the plug 5002. In the example shown, the wire manager 5008 and boot 5010 are integrally formed. A first portion 5008A of the wire manager 5008 is connected to a second portion 5008B

with a living hinge. In other implementations, however, other types of wire managers and boots may be utilized.

[0073] The plug 5002 also includes a plug nose body 5004 having a first side 5014 and a second side 5016 (FIGS. 6-11). In one embodiment, a shield 5003 can be mounted to the plug nose body 5004. For example, the shield 5003 can be snap-fit to the plug nose body 5004. The first side 5014 of the plug nose body 5004 includes a key member 5015 and a finger tab 5050 that extends outwardly from the key member 5015. The key member 5015 and finger tab 5050 facilitates aligning and securing the connector arrangement 5000 to a connector assembly as will be described in more detail herein. In certain implementations, the finger tab 5050 attaches to the plug nose body 5004 at the key member 5015. In one implementation, the finger tab 5050 and the key member 5015 are unitary with the plug nose body 5004.

[0074] The finger tab 5050 is sufficiently resilient to enable a distal end 5051 of the finger tab 5050 to flex or pivot toward and away from the plug nose body 5004. Certain types of finger tabs 5050 include at least one cam follower surface 5052 and a latch surface 5054 for latching to the connector assembly as will be described in more detail herein. In certain implementations, the finger tab 5050 includes two cam follower surfaces 5052 located on either side of a handle extension 5053 (see FIG. 6). Depressing the handle extension 5053 moves the latch surfaces 5054 toward the plug nose body 5004. In certain implementations, the wire manager 5008 and/or boot 5010 include a flexible grip surface 5011 that curves over at least the distal end 5051 of the handle extension 5053 to facilitate depressing of the handle extension 5053 (e.g., see FIG. 4).

[0075] The second side 5016 of the plug nose body 5004 is configured to hold main signal contacts 5012, which are electrically connected to the twisted pair conductors of the communications cable. Ribs 5013 protect the main signal contacts 5012. In the example shown, the plug 5002 is insertable into a port of a mating jack of a connector assembly, such as port 325 of jack module 320 of FIG. 3. The main signal contacts 5012 of the plug 5002 electrically connect to contacts positioned in the jack module to create an electrical path over which communications signals,

such as signals S1 of FIG. 1, are carried. In accordance with other aspects, however, the connector arrangement 5000 can define other types of electrical connections.

[0076] In some implementations, the key member 5015 of the plug nose body 5004 defines a cavity 5060 (see FIG. 6). In accordance with some aspects, the key member 5015 is positioned at a front of the plug nose body 5004. In the example shown, the key member 5015 forms the base 5052 of the finger tab 5050. The key member 5015 includes support members 5016 that defines guide grooves 5017 in the interior sides of the housing member 5015.

[0077] The connector arrangement 5000 also includes a storage device 5030 (FIG. 7) that is configured to store information (e.g., an identifier and/or attribute information) pertaining to the segment of physical communications media (e.g., the plug 5002 and/or the electrical cable terminated thereat). In some embodiments, the connector arrangement 5000 also can include additional components to aid in physical layer management. In some embodiments, the storage device 5030 can be arranged on a printed circuit board 5020 that is mounted to the modular plug 5002 (see FIGS. 8-9). In the example shown, the printed circuit board 5020 can be slid along the guide grooves 5017 within the cavity 5060 defined by the housing member 5015. In certain embodiments, additional components can be arranged on the printed circuit board 5020.

[0078] In the example shown in FIGS. 6-7, the printed circuit board 5020 includes a substrate with conductive traces electrically connecting contacts and lands. The circuit 5020 also includes circuit components, including the media storage device 5030, at the lands. In the example shown in FIG. 7, the circuit 5020 includes an EEPROM 5032. In one embodiment, the EEPROM 5032 forms the media storage device 5030 for modular plug 5002. In other embodiments, however, the storage device 5030 can include any suitable type of memory.

[0079] In accordance with some aspects, the circuit 5020 defines a body 5022 having a first side 5021 and a second side 5023. The EEPROM 5032 can be mounted to the second side 5023 of the PCB body 5022. The circuit contacts 5034 are arranged on the first side 5023 of the PCB body 5022. The circuit contacts 5034

permit connection of the EEPROM 5032 to a media reading interface, such as media reading interface 324 of FIG. 3.

[0080] The plug 5002 also includes a plug cover 5006 that mounts on the plug nose body 5004 (see FIGS. 8-9). In the example shown, the plug cover 5006 mounts to the housing member 5015 to enclose the cavity 5060. For example, the plug cover 5006 includes a body 5040 defining a first side 5042 and a second side 5044. In the example shown, the first side 5042 is generally orthogonal to the second side 5044. Ribs 5046 extend between the first and second sides 5042, 5044. In the example shown, the ribs 5046 extend over a curved edge defined by the first and second sides 5042, 5044. In one example, contacts of a media reading interface on a patch panel can extend through the ribs 5046 to connect to the circuit contacts 5034 on the printed circuit board 5020.

[0081] The body 5040 of the plug cover 5006 can define latch arms 5007 configured to latch within the cavity 5060 defined in the housing member 5015. For example, the latch arms 5007 can latch behind the support members 5016 defined in the cavity 5060. In the example shown, the latch arms 5007 are configured to extend beneath the printed circuit board 5020 when the board 5020 is mounted within the guiding grooves 5017 in the cavity 5060. In one implementation, the plug cover 5006 fits generally flush with the housing member 5015 when the printed circuit board 5020 is mounted within the housing member 5015 (see FIGS. 10-11)

[0082] In accordance with some aspects, the connector arrangement is manufactured by fabricating a plug body 5004 including a key member 5015, mounting a storage device 5030 within a cavity 5060 of the key member 5015, and closing the cavity 5060 with a cover member 5006. In some implementations, fabricating the plug body 5004 includes molding the plug body 5004 with the cavity 5060 in the key member 5015. In other implementations, fabricating the plug body 5004 includes molding the plug body 5004 with the key member 5015 and subsequently eliminating (e.g., cutting, melting, disintegrating, etc.) material in the key member 5015 to form the cavity 5060.

[0083] In some implementations, the storage device 5030 is manufactured by mounting an EEPROM chip 5032 on a printed circuit board 5020. Contacts 5034

also are mounted to the printed circuit board 5020 to be electrically connected to the EEPROM chip 5032 via tracings of the printed circuit board 5020. In certain implementations, the EEPROM 5032 is mounted to one side of the printed circuit board and the contacts 5034 are mounted to a different (e.g., opposite) side.

[0084] In some implementations, positioning the storage device 5030 within the plug cavity 5060 includes sliding the storage device 5030 along guides 5017 formed in the cavity 5060. In certain implementations, mounting the storage device 5030 within the cavity 5060 including positioning the storage device 5030 within the cavity 5060 with the contact pads 5034 outwardly from the plug body 5004 and the EEPROM 5032 facing inwardly toward the plug body 5004. In certain implementations, closing the cavity 5060 of the plug 5002 includes latching the cover member 5006 to inner surfaces of the key member 5015.

[0085] FIG. 15 shows one example connector arrangement 5000 (e.g., plug 5002) being inserted into an example connector assembly 5100. The example connector assembly 5100 shown includes a jack module 5110 defining a socket 5112 that is configured to receive the plug 5002. In one implementation, the jack module 5110 includes an RJ-45 jack socket 5112. In other implementations, the jack module 5110 may include another type of jack socket.

[0086] FIGS. 16-23 illustrate one example jack module 5110 that is suitable for use with the plug 5002 disclosed herein. The jack module 5110 also defines slots 5119 through which plug connection contacts 5141 extend into the socket 5112. The plug connection contacts 5141 define contact surfaces 5142 at which the plug connection contacts 5141 contact the main signal contacts 5012 of the plug 5002. The jack module 5110 defines a guide surface 5114 within the socket 5112 that the plug 5002 follows when inserted into the jack module 5110 (FIG. 17). The guide surface 5114 leads to a stop surface 5115 within the socket 5112 that abuts against a front end of the plug 5002 when the plug 5002 is inserted.

[0087] Certain types of jack modules 5110 also include latching members 5116 that retain the plug 5002 within the socket 5112 when the plug 5002 is inserted (see FIG. 17). In some implementations, the latching members 5116 having a first end defining a cam surface 5117 and a second end defining a shoulder 5118 (FIG. 19).

When the plug 5002 is inserted into the socket 5112, the cam follower surfaces 5052 on the finger tab 5050 of the plug 5002 ride over the cam surface 5117 of the latching member 5116 of the jack module 5110. When the plug 5002 has been sufficiently inserted, the latch surfaces 5054 of the finger tab 5050 snap behind the shoulders 5118 of the latching members 5116 of the jack module 5110.

[0088] The latching members 5116 retain the plug 5002 within the socket 5112 and guard against unintentional removal of the plug 5002 from the socket 5112. To remove the plug 5002 from the socket 5112, a user may depress the handle extension 5053 of the finger tab 5050 to flex the finger tab 5050 toward the plug nose body 5004. For example, the user may push on the flexible grip surface 5011 on the plug 5002, which presses on the handle extension 5053 of the finger tab 5050. Flexing the finger tab 5050 toward the plug nose body 5004 lifts the latch surfaces 5054 out of alignment with the shoulders 5118 of the latching members 5116 of the jack module 5110, thereby allowing a user to pull the plug 5002 out of the socket 5112.

[0089] In certain types of jack modules 5110, the plug connection contacts 5141 of the jack module 5110 are configured to electrically couple to one or more insulation displacement contacts (IDCs) 5144 located at an IDC section 5121 of the jack module 5110 (see FIG. 32). Inserting the plug 5002 into the socket 5112 brings the main signal contacts 5012 of the plug 5002 into contact with the contact surfaces 5142 of the plug connection contacts 5141, thereby establishing an electrical connection therebetween. Signals carried by the media segments terminated at the plug 5002 may be transferred to media segments terminated at the IDCs 5144 via the plug main signal contacts 5012 of the jack module 5110. In other implementations, however, the plug connection contacts 5141 may connect to other types of contacts, such as plug contacts of another jack module, or to other electrical components.

[0090] In some implementations, the plug connection contacts 5141 connect directly to the IDCs 5144. For example, in one implementation, the plug connection contacts 5141 and the IDCs 5144 may form a unitary contact member. In other implementations, the plug connection contacts 5141 connect to the IDCs 5144 via a first printed circuit board 5143. For example, in one implementation, the plug connection contacts 5141 and the IDCs 5144 may connect to the printed circuit board 5143 using solder pins, using a surface mount connection, or using another

type of connection (see FIG. 32). Certain types of jack modules 5110 includes a seat 5120 configured to support the first printed circuit board 5143. In the example shown in FIG. 32, the first printed circuit board 5143 extends in a plane that is parallel to the insertion axis of the plug 5002.

[0091] In some implementations, the jack module 5110 also includes a strain relief member 5130 that aids in retaining a second electrical cable at the jack module 5110. In particular, the strain relief member 5130 aids in retaining a second electrical cable having electrical conductors (e.g., wires) terminated at the IDCs 5144 of the jack module 5110. Certain types of strain relief members 5130 include a support surface 5131 connected to at least one arm 5132 having a latching tab 5133 that connects to the jack module 5110. In the example shown in FIGS. 18, 19, and 21, the example strain relief member 5130 includes a curved support surface 5131 extending between two arms 5132, each arm 5132 defining a latching tab 5133.

[0092] The jack module 5110 defines at least one rib 5129 at which the latching tab 5133 of the strain relief member 5130 may latch. In the example shown, the jack module 5110 defines multiple ribs 5129 at each side of the jack module 5110. The strain relief device 5130 may be adjusted to accommodate various types and sizes of second cables by latching the tabs 5133 of the strain relief device 5130 to appropriate ribs 5129. In certain implementations, the strain relief device 5130 defines a spring clip such that outward pressure applied to the support member 5131 causes the arms 5132 to flex toward the sides of the jack module 5110, thereby strengthening the force with which the strain relief device 5130 attaches to the jack module 5110. In one implementation, the support member 5131 defines one or more protrusions, cutouts, bumps, or other surface texturing members that aid in retaining the cable against the support member 5131 (e.g., see FIG. 18).

[0093] In some implementations, the jack module 5110 includes a second section 5138 that couples to the first section 5111. In certain implementations, the first section 5111 defines the socket 5112, the latching members 5116, and the IDC section 5121. In such implementations, the second section 5138 may cover at least the IDC section 5121 of the first section 5111 to protect the conductor terminations at the IDCs 5144. For example, certain types of second sections 5138 include a base 5139 that extends across the IDC section 5121 and arms 5140 that extend over sides

of the jack module 5110 (FIG. 16). The arms 5140 of the second section 5138 may latch or otherwise attach to the first section 5111 of the jack module 5110. In some implementations, the first section 5111 defines the ribs 5129 to which the strain relief member 5130 attaches. In other implementations, however, the second section 5138 may define the ribs 5129.

[0094] In some implementations, an electrically conductive shield 5134 may be installed (e.g., snap-fit, clipped, latched, etc.) on the jack module 5110 (FIG. 17). For example, the shield 5134 may be used to ground the jack module 5110 and electrical segments connected therein. In the example shown, the conductive shield 5134 includes a first section 5135 that extends over a first side of the jack module 5110 and side sections 5136 that extend over the sides of the jack module 5110. In certain implementations, the shield 5134 includes wrap-around sections 5137 that wrap around the front of the jack module 5110 and extend at least partially into the socket 5112. The wrap-around sections 5137 are configured to contact the shield 5003 of the plug 5002 when the plug 5002 is inserted in the jack module 5110. In one implementation, the wrap-around sections 5137 define a resilient section to aid in making contact with the plug shield 5003.

[0095] Certain types of jack modules 5110 are configured to mount to a patch panel as will be described in more detail herein. In some implementations, the jack module 5110 includes guides 5122 that aid in installing the jack module 5110 in an example patch panel. In the example shown in FIGS. 16-23, the guides 5122 define wing extensions having ramped or camming surfaces at a first end. In one implementation, the jack module 5110 includes a guide 5122 extending outwardly from each side of the jack module 5110 (FIGS. 20-21). In one implementation, the guides 5122 are formed on the first section 5111 of the jack module 5110.

[0096] Certain types of jack modules 5110 also may include a panel latching arrangement 5123 to aid in securing the jack module 5110 to a patch panel. In some implementations, the panel latching arrangement 5123 includes at least a first latch member having a ramped surface 5124 and a shoulder 5125. In the example shown, the panel latching arrangement 5123 includes two latch members separated by a gap 5126. Each latch member defines a ramped surface 5124 at one end and a shoulder 5125 at the opposite end. In certain implementations, the latch members are

generally located between the guides 5122. In certain implementations, the panel latching arrangement 5123 is located on the first section 5111 of the jack module 5110.

[0097] Referring back to FIG. 15, the connector assembly 5100 also includes a media reading interface 5145 (FIGS. 24-29) coupled to the jack module 5110. The media reading interface 5145 includes a second set of contacts 5146 that are configured to contact the storage device contacts 5034 of the plug 5002 (e.g., see FIG. 30) to provide a conductive path between the storage device contacts 5034 and a data network, such as network 101 of FIG. 1 or network 218 of FIG. 2. In certain implementations, the second contacts 5146 connect to a second printed circuit board 5165 (see FIG. 32) that is configured to connect to the data network (e.g., via a processor and/or network interface as described herein).

[0098] In accordance with some aspects, at least portions of the second contacts 5146 of the media reading interface 5145 extend into the socket 5112 of the jack module 5110. In some implementations, the portions of the second contacts 5146 may extend through a cutout 5113 defined in a surface of the jack module 5110 (see FIG. 31). The cutout 5113 provides access to the jack socket 5112 through a wall of the jack module 5110. In some implementations, the cutout 5113 is continuous with a socket port at the front of the jack module 5110. In certain implementations, the cutout 5113 may be located at an opposite side of the jack module 5110 from the contact slots 5119 through which the plug connection contacts 5141 extend into the socket 5112 (e.g., see FIG. 15). For example, in one implementation, the cutout 5113 is located on the same side of the jack module 5110 as the latching members 5116 for securing the plug 5002 (e.g., see FIG. 31).

[0099] Certain types of jack modules 5110 may include guide members 5127 (see FIGS. 16, 19, and 20) that aid in securing the media reading interface 5145 to the jack module 5110. In the example shown in FIG. 16, the guide members 5127 are located on either side of the cutout 5113. In other implementations, the guide members 5127 may be located elsewhere on the jack module 5110. In some implementations, the guide members 5127 define channels 5128 (FIG. 20) that are configured to receive portions of the media reading interface 5145 (e.g., see FIG. 15).

[0100] One example media reading interface 5145 is shown in FIGS. 24-29. The example media reading interface 5145 is suitable for use with the jack module 5110 shown in FIGS. 16-23. The media reading interface 5145 includes guide flanges 5151 (FIG. 24) that are sized and shaped to be received within the channels 5128 of the guide members 5127 of the jack module 5110. In one implementation, the guide flanges 5151 include stops (e.g., bumps) 5152 that aid in securing the media reading interface 5145 to the guide members 5127 of the jack module 5110 (see FIG. 24). For example, the stops 5152 may be defined at forward ends of the guide flanges 5151.

[0101] In some implementations, the media reading interface 5145 also includes a stop arrangement 5163. In the example shown in FIG. 24, the stop arrangement 5163 defines a generally U-shaped upward extension including laterally extending wings that define guide channels on either side of the stop 5163. In some implementations, the media reading interface 5145 is mounted to the jack module 5110 by sliding the guide flanges 5151 of the media reading interface 5145 into the guide channels 5128 of the jack module 5110. In certain implementations, the stop 5163 of the media reading interface 5145 defines wings that ride over the camming surfaces of the latching members 5116 of the jack module 5110 when the media reading interface 5145 is inserted.

[0102] The example media reading interface 5145 also defines a channel 5150 (FIGS. 25 and 29) configured to receive a second printed circuit board 5165, which connects to a data network. For example, the second printed circuit board 5165 may connect to a processor (e.g., a slave processor or a master processor) and/or to a network interface for connection to the data network. In certain implementations, the second printed circuit board 5165 extends in a plane that is generally orthogonal to the insertion axis of the plug 5002 into the socket 5112. In one implementation, the second printed circuit board 5165 extends in a plane that is generally orthogonal to the first printed circuit board 5143.

[0103] As shown in FIGS. 26 and 27, the second contacts 5146 include one or more contact members that extend from first sections defining plug contact surfaces 5147 to second sections defining PCB contact surfaces 5148. The plug contact surfaces 5147 of the second contacts 5146 extend out of the media reading interface 5145,

through the cutout 5113 of the jack module 5110, and into the jack socket 5112. The PCB contact surfaces extend into the channel 5150 to contact the second printed circuit board 5165 (see FIG. 25). In certain implementations, the second sections of the second contacts 5146 curve around in a J-shape to align the PCB contact surfaces 5148 with the second circuit board 5165 within the channel 5150.

[0104] In certain implementations, the media reading interface 5145 includes a first housing part 5156 and a second housing part 5160. The second contacts 5146 are held between the first and second housing parts 5156, 5160. In some implementations, the channel 5150 for the second circuit board 5165 is formed in the first housing part 5156. In other implementations, the channel 5150 is formed in the second housing part 5160. In still other implementations, the first and second housing parts 5156, 5160 cooperate to form the channel 5150 (e.g., see FIG. 32). In some implementations, the first housing part 5156 defines a viewing channel 5153 that forms a passage between the PCB channel 5150 and an exterior of the media reading interface 5145. The viewing channel 5153 is configured to align with a light indicator (e.g., an LED) 5169 installed on the second printed circuit board 5165 (e.g., see FIG. 42).

[0105] In some implementations, the first housing part 5156 forms a main housing and the second housing part 5160 defines a retention section. The first housing part 5156 defines the PCB channel 5150 extending between front and rear flanges. The viewing channel 5153 extends through the front flange. The rear flange defines a passage 5158 in which the second housing part 5160 may be received. In certain implementations, one of the housing parts 5156, 5160 defines alignment members and the other of the housing parts 5156, 5160 defines alignment slots to aid in assembling the media reading interface 5146 (e.g., see FIG. 26).

[0106] Further, in certain implementations, one of the housing parts 5156, 5160 defines slots in which the contact members of the second contacts 5146 may be received. For example, in some implementations, the first housing part 5156 defines slots 5157 that receive the contact members of the second contacts 5146. Indeed, in some implementations, the second housing part 5160 includes ribs 5161 that aid in spacing the contact members of the second contacts 5146 and inhibit touching of the

contact members. The slots 5157 of the first housing part 5156 align with channels between the ribs 5161 of the second housing part 5160.

[0107] In some implementations, the second contacts 5146 form spring contacts. In some such implementations, the first sections are configured to flex toward the stop 5163 when a plug 5002 presses against the plug contact surfaces 5147. For example, the first sections may pass through the channels defined between the ribs 5161. In certain implementations, the stop 5163 defines a ramped surface 5164 facing the second contacts 5146. The ramped surface 5164 may be shaped and positioned to accommodate flexing of the second contacts 5146 when a plug 5002 is inserted into the jack 5110.

[0108] In some implementations, the second housing part 5160 is configured to latch to the first housing part 5156. For example, in some implementations, the second housing part includes one or more latch members 5162 that are configured to latch to latching recesses 5159 of the first housing part 5156. In one implementation, each latch member 5162 defines a ramped surface and an opposite facing shoulder (FIGS. 26-27). In other implementations, the latch members may be defined on the first housing part 5156 and the latching recesses may be defined on the second housing part 5160. In still other implementations, the second housing part 5160 may be otherwise secured to the first housing part 5156.

[0109] In accordance with some aspects, certain types of media reading interfaces 5145 are configured to aid in determining whether a plug 5002 has been received in the socket 5112 of the jack module 5110. In some implementations, the media reading interface 5145 includes a sensing member that interacts with at least some of the second contacts 5146. In other implementations, the media reading interface 5145 includes a shorting pin 5155 that extends across at least two contact members of the second contacts 5146 (see FIGS. 28 and 31).

[0110] At least some of the contact members of the second contacts 5146 define shorting surfaces 5149 that are configured to selectively contact the shorting pin 5155. The shorting pin 5155 causes an electrical short between two or more contact members of the second contacts 5146 when the shorting surfaces 5149 of the contact

members touch the shorting pin 5155. The second printed circuit board 5165 is configured to determine whether the contact members are shorted together.

[0111] In some implementations, the media reading interface 5145 defines a pin receiving passage 5154 (FIGS. 27-29) in which the shorting pin 5155 may be received. In some implementations, the pin receiving passage 5154 is defined in the first housing part 5156. In certain implementations, the passage 5154 extends across two contact member slots 5157 of the first housing 5156. In other implementations, the passage 5154 extends cross all contact members slots 5157 of the first housing part 5156. In still other implementations, the pin receiving passage 5154 may be defined in the second housing part 5160.

[0112] As shown in FIG. 32, when the plug 5002 is received in the socket 5112 of the jack module 5110, the main signal contacts 5012 touch the plug connection contacts 5141 and the storage member contacts 5034 touch the plug contact surfaces 5147 of the second contacts. The key member 5015 of the plug 5002 pushes the first sections of the second contacts 5146 downwardly (see FIG. 30). Depressing the plug contact surfaces 5147 of the second contacts 5146 pulls the shorting surfaces 5149 away from the shorting pin 5155 (see FIG. 32), thereby eliminating the electrical short between the contact members.

[0113] Referring to FIGS. 33-78, in accordance with some aspects, one or more jack modules 5110 and media reading interfaces 5145 can be coupled together to form patch panels. In general, the patch panels have fronts, rears, first sides, and second sides. The fronts of the patch panels defines multiple front ports at which to receive plugs (e.g., plug 5002 of FIGS. 4-14) that terminate electrical cables. The rears of the patch panels define multiple rear terminations at which additional electrical cables may be received and terminated. In some implementations, the rear terminations include fixed terminations, such as insulation displacement contacts. For example, in certain implementations, the sockets 5112 of the jack modules 5110 define the front ports and the IDCs 5144 of the jack modules 5110 define the rear terminations. In other implementations, the rear terminations may include additional jack modules or other types of connectors.

[0114] FIGS. 33-51 show a first example patch panel 5200 having a front 5201, a rear 5202, a first side 5203, and a second side 5204. The patch panel 5200 is configured to hold at least one jack module (e.g., jack module 5110 of FIGS. 16-23) and at least one media reading interface (e.g., media reading interface 5145 of FIGS. 24-29). The front 5201 of the first example patch panel 5200 defines one or more front ports 5205 through which the sockets of the jack modules are accessible. The rear 5202 of the first example patch panel 5200 includes rear terminations defined by the IDS section 5121 of the jack modules.

[0115] The patch panel 5200 includes mounting members 5206 that are configured to enable installation of the patch panel 5200 to a rack, frame, cabinet, or other equipment structure. In certain implementations, the mounting members 5206 are located at the sides 5203, 5204 of the patch panel 5200. In the example shown, the mounting members 5206 define openings 5207 through which fasteners (e.g., screws, bolts, rivets, etc.) may extend to secure the patch panel 5200 to one or more rails.

[0116] In some implementations, the patch panel 5200 includes a front housing part 5210 and a rear housing part 5220 (see FIG. 34). The first housing part 5210 defines the front ports 5205. In some implementations, the front housing part 5210 includes a frame 5240. In certain implementations, the front housing part 5210 also includes a fascia 5250 that is removeably coupled to the frame 5240. In certain implementations, the patch panel 5200 also includes a grounding connection 5209 (FIG. 35). The grounding connection 5209 may connect to the shields 5134 of the jack modules 5110 and/or to the second printed circuit board 5165.

[0117] The rear housing part 5220 includes at least one or more jack modules 5110 mounted to a chassis 5230. In certain implementations, the rear housing part 5220 also includes one or more media reading interfaces 5145. In one implementation, the patch panel 5200 has the same number of jack modules 5110 and media reading interfaces 5145. In other implementations, the patch panel 5200 has more jack modules 5110 than media reading interfaces 5145. For example, in one implementation, the patch panel 5200 may have twice as many jack modules 5110 than media reading interfaces 5145. In other implementations, the patch panel 5200 may include more media reading interfaces 5145 than jack modules 5110. For

example, in certain implementations, each jack module 5110 may define two plug sockets. In such implementations, each plug socket may have its own media reading interface 5145.

[0118] In some implementations, the media reading interfaces 5145 are mounted to a printed circuit board 5165. In the example shown in FIG. 34, multiple media reading interfaces 5145 mount over at least a first edge of the second printed circuit board 5165. Each media reading interface 5145 also is connected to at least one jack module 5110. The second printed circuit board 5165 in installed at the patch panel 5200. For example, in FIG. 34, the second printed circuit board 5165 is configured to be held between the first housing part 5210 and the second housing part 5220.

[0119] In some implementations, the first housing part 5210 is fastened to the second housing part 5220. In the example shown, the frame 5240 defines one or more first openings 5212, the second printed circuit board 5165 defines one or more second openings 5222, and the chassis 5230 defines one or more third openings 5224. One or more fasteners (e.g., screws, bolts, etc.) 5215 are configured to extend through the first, second, and third openings 5212, 5222, 5224 to secure the second printed circuit board 5165 between the frame 5240 and the chassis 5230. In certain implementations, the fastener 5215 is configured to extend through a spacer 5218 positioned between the frame 5240 and the second printed circuit board 5165.

[0120] In the example shown, a threaded fastener 5215 is configured to extend through the openings 5212, 5222, 5224. In some implementations, the threaded fastener 5215 is configured to screw directly into the chassis 5230 (e.g., into the passages 5224 defined in the chassis 5230). In other implementations, however, the threaded fastener 5215 is configured to screw into a threaded insert 5225. In some such implementations, the threaded insert 5225 may abut against a portion of the chassis 5230 from a rear of the chassis 5230. For example, the threaded insert 5225 may mount at least partially within the passage 5224 defined in the chassis 5230 and abut against a forward or intermediate surface of the chassis 5230. Of course, any of these attachment mechanisms can be used on the components of any of the patch panels disclosed herein.

[0121] The patch panel 5200 may be configured to receive a processing unit (e.g., a CPU) 5270. In generally, the processing unit 5270 includes at least one processor (e.g., processor 206 or processor 217 of FIG. 2). For example, the second printed circuit board 5165 may define a connector or connector port (e.g., see FIG. 57) that connects to a connector port or connector 5271 on the processing unit 5270. The second printed circuit board 5165 electrically connects the media reading interfaces 5145 to the processing unit 5270. Accordingly, the processing unit 5270 may request one or more of the media reading interfaces 5145 to read information (e.g., physical layer information) from the storage device 5030 of one or more corresponding plugs 5002. The processing unit 5270 also may receive the information from the media reading interfaces 5145 and provide the information to a data network (e.g., network 101 of FIG. 1 or network 218 of FIG. 2). In certain implementations, the processing unit 5270 also may provide (e.g., write) information to the storage device 5030 of one or more plugs 5002 via the media reading interfaces 5145.

[0122] In some implementations, the patch panel 5200 also may include at least one cable manager 5260. In certain implementations, the patch panel 5200 includes a cable manager 5260 that organizes the cables connected to the rear terminations. In some implementations, the cable manager 5260 mounts to the second housing part 5220. For example, in one implementation, the cable manager 5260 mounts to the chassis 5230. In another implementation, the cable manager mounts to the grounding assembly 5209 (e.g., see FIG. 52) that mounts to the chassis 5230. In other implementations, the cable manager 5206 may mount to the front housing part 5210.

[0123] One example implementation of a frame 5240 is shown in FIG. 34B. The frame 5240 includes a frame body 5241 defining at least one opening 5242 through which a plug 5002 can access a socket 5112 of a jack module 5110. In certain implementations, the openings 5242 are sufficiently large to enable the front of both the jack module 5110 and the media reading interface 5145 to be viewing from a front of the frame 5240 when the first and second housing parts 5210, 5220 are mounted together. For example, the viewing channel 5153 of the media reading interface 5145 may be viewing through the frame opening 5242.

[0124] In certain implementations, the frame body 5241 defines upper and lower bent flanges 5243 that wrap around portions of the second housing part 5220 to aid in retaining the first and second housing parts 5210, 5220. In certain implementations, the lower flange 5243 may aid in retaining the second printed circuit board 5165 within the patch panel 5200. For example, the lower bent flange 5243 of the frame body 5241 may extend over a bottom of the second circuit board 5165 to hold the second circuit board 5165 within the channel 5150 defined in the second media reading interface (e.g., see FIG. 51)

[0125] As noted above, the frame body 5241 also defines openings 5212 through which fasteners (e.g., screws, bolts, rivets, etc.) 5215 may be inserted to secure the first housing part 5210 to the second housing part 5220. In some implementations, the frame body 5241 also defines openings to accommodate components mounted to the second housing part 5220. For example, the frame body 5241 may define openings 5246, 5247 to accommodate a cable port 5166 and light indicators 5167, respectively, as will be described in more detail herein.

[0126] In some implementations, the frame body 5241 defines the mounting members 5206. For example, side flanges of the frame 5241 define the openings 5207 through which fasteners may be extended. In other implementations, separate mounting members 5206 may connect to the frame body 5241. In other implementations, the mounting members 5206 may be defined by the fascia 5250. In still other implementations, the mounting members 5206 may connect to the second housing part 5220 (e.g., to the chassis 5230).

[0127] The frame body 5241 also is configured to receive the fascia 5250. In some implementations, the frame body 5241 defines openings 5244 configured to receive retaining members 5258 of the fascia 5250. In other implementations, the frame body 5241 may define retaining members that fit into openings defined in the fascia 5250. In certain implementations, the frame body 5241 also includes tabs 5245 that extend forwardly from some of the openings 5242 to be received in slots defined in the fascia 5250 to aid in aligning and installing the fascia 5250 on the frame 5240.

[0128] One example implementation of a fascia 5250 is shown in FIG. 34A. The fascia 5250 includes a fascia body 5251 defining a plurality of openings 5252 that

align with the openings 5242 of the frame body 5241 to provide access to the jack module socket 5112 from the front 5201 of the patch panel 5200. In some implementations, the openings 5252 of the fascia body 5251 are smaller than the openings 5242 of the frame body 5241. In certain implementations, the openings 5252 of the fascia body 5251 define keyways 5253 for the plugs 5002. They keyways 5253 of the fascia body 5251 are oriented to align with the cutouts 5113 of the jack modules 5110 when the first and second housing parts 5210, 5220 are mounted together.

[0129] In some implementations, the fascia body 5251 includes tabs 5254 that extend rearwardly from the fascia body 5251. In the example shown, the tabs 5254 generally align with the openings 5252. In other implementations, however, the fascia body 5251 may include greater or fewer tabs 5254. The tabs 5254 extend over the upper and lower bend flanges 5243 of the frame body 5241 when the fascia 5250 is mounted to the frame 5240. In one implementation, the tabs 5254 friction-fit over the flanges 5243 of the frame to aid in retaining the fascia 5250 to the frame 5240. In certain implementations, some of the tabs 5254 define openings, cutouts 5255, or inner protrusions that may aid in retaining the fascia 5250 to the frame 5240.

[0130] As noted above, the fascia body 5251 also includes retaining members 5258 to secure the fascia body 5251 to the frame body 5241. In some implementations, the fascia body 5251 includes at least one retaining member 5258 at each side of the fascia body 5251. In other implementations, the fascia body 5251 includes multiple retaining members 5258 at each side of the fascia body 5251. In still other implementations, the fascia body 5251 includes multiple retaining members spaced along at least one side (e.g., a bottom) of the fascia body 5251.

[0131] In some implementations, the retaining members 5258 extend through the frame body 5241 and latch in the openings 5244. In other implementations, the retaining members 5258 may otherwise secure (e.g., latch, press-fit, snap-fit, etc.) to the frame body 5241 via latching openings 5244. In other implementations, the retaining members 5258 may extend through the openings 5244 and secure to the chassis 5230 of the second housing part 5220.

[0132] In some implementations, the fascia body 5251 also defines openings to accommodate components mounted to the second housing part 5220. For example, the fascia body 5251 may define openings 5256, 5257, 5259 to accommodate a cable port 5166 and light indicators 5167 of the second printed circuit board 5165. One example implementation of a printed circuit board 5165 including a cable port 5166 and light indicators 5167 will be described in more detail herein.

[0133] As shown in FIGS. 37-39, end caps 5280 may be mounted over the side flanges of the frame 5241 to cover the mounting members 5206. In the example shown, each end cap 5280 includes a body 5281 that is sized and shaped to cover the front of one side flange of the frame 5241. Each end cap 5280 also includes mounting members 5282 by which the end cap body 5281 is attached to the patch panel 5200. In some implementations, the mounting members 5282 attach to the frame body 5241. In other implementations, the mounting members 5282 attach to the fascia body 5251.

[0134] Certain types of end caps 5280 are configured to pivot to selectively expose and cover the openings 5207 of the mounting members 5206. In some implementations, the mounting members 5282 include pins about which the end cap body 5281 may pivot (FIG. 39). In the example shown in FIG. 37, the mounting pins 5282 attach to sides of the fascia body 5251. The end cap 5280 also includes a retention mechanism 5283 (FIG. 39) by which the end cap body 5281 may be retained in position to cover the mounting member openings 5207. The retention mechanism 5283 grips a portion 5287 (FIG. 37) of the mounting member 5206 when the end cap 5280 covers the mounting member 5206. In the example shown, the retention mechanism 5283 includes flanges 5284 and latching tab 5285 that extend through cutouts 5286 defined in the mounting member. The latching tab 5285 snaps behind the portion 5287 of the mounting member 5206.

[0135] Labels may be installed on the fascia body 5251. In some implementations, labels are installed on a front of the fascia body 5251. For example, labels may be glued, latched, or otherwise secured to a front of the fascia body 5251. In other implementations, however, labels may be installed behind a clear or opaque fascia body 5251. In certain implementations, one or more label holders 5290 may be mounted to first part 5210 of the patch panel 5200.

[0136] One example label holder 5290 is shown in FIGS. 40 and 41. The example label holder 5290 includes a holder body 5291 having a first side 5298 and a second side 5299. At least the first side 5298 of the holder body 5291 defines a tray 5292 bounded by upper and lower flanges 5293. One or more labels may be seated in the tray 5292 between the flanges 5293. In certain implementations, retention tabs 5296 (FIG. 41) may be provided to further aid in retaining the labels within the tray 5292. In certain implementations, the label holder 5290 may include dividing flanges 5297 (FIG. 41) that separate sections of the holder tray 5292 to facilitate mounting multiple labels to the tray 5292 side-by-side.

[0137] In some implementations, the label holder 5290 is configured to mount between the frame body 5241 and the fascia body 5251. For example, in certain implementations, the holder body 5291 includes a first attachment end 5294 and a second attachment end 5295 that are held between the frame and fascia bodies 5241, 5251 (e.g., see FIGS. 36 and 36A). In the example shown, at least the second attachment end 5295 is configured to extend through an opening 5259 in the fascia body 5251 (see FIG. 36A).

[0138] Certain types of label holders 5290 are configured to be reversible. For example, the label holder 5290 shown in FIGS. 40-41 includes flanges 5293 that extend both forwardly and rearwardly from the tray 5292. Accordingly, labels may be seated at the tray 5292 on either side 5298, 5299 of the label holder 5290. In one implementation, the first side 5298 (FIG. 40) of the label holder 5290 is configured to hold one elongated label and the second side 5299 (FIG. 41) of the label holder 5290 is configured to hold multiple shorter labels. The first and second attachment ends 5294, 5295 of the holder body 5291 are configured so that the label holder 5290 may be secured to the first housing part 5210 with either the first side 5298 or the second side 5299 facing forwardly through the fascia body 5251. Accordingly, a user may select which side of the label holder 5290 to utilize to holder labels.

[0139] FIGS. 42-49 show example components of the second housing part 5220. FIG. 42 is a front perspective view of one example second housing part 5220 mounted to a first edge of the second printed circuit board 5165. A front side of the second printed circuit board 5165 defines contact pads 5168 at which the second contacts 5146 of the media reading interface 5145 electrically connect to the second

circuit board 5165 (see FIG. 43). The rear side of the second printed circuit board 5165 includes a connector or connector 5278 (FIG. 57) that is configured to couple to a connector or connector port 5271 (FIG. 34) of the processing unit 5270.

[0140] The front side of the second circuit board 5165 also includes a light indicator (e.g., an light emitting diode) 5169 that is used to display information pertaining to the media reading interface 5145, the second contacts 5146, the jack module 5110, and/or the plug connection contacts 5141 (see FIG. 43). The light is visible through the viewing channel 5153 of the media reading interface 5145. In some implementations, the second printed circuit board 5165 also may include additional light indicators 5167 to provide information to a user about the status of the patch panel (see FIG. 42). For example, the additional light indicators 5167 may provide error information. In the example shown in FIG. 42, the second printed circuit board 5165 includes three additional light indicators 5167. In other implementations, however, the second printed circuit board 5165 may include greater or fewer additional light indicators 5167.

[0141] In certain implementations, the second circuit board 5165 also includes a cable port 5166 at which a cable may be interfaced to the second printed circuit board 5165 (e.g., see FIG. 42). For example, the cable port 5166 may enable a user to connect a data cable to the second printed circuit board 5165 to obtain information from the storage device 5030 on one or more plugs 5002 inserted in the patch panel 5200. In certain implementations, the cable port 5166 also may enable a user to write information directly to the storage device 5030 of one or more plugs 5002. In other implementations, the cable port 5166 enables a user to access the processing unit 5270 from the front 5201 of the patch panel 5200.

[0142] One example chassis 5230 is shown in FIGS. 45-48. The chassis 5230 includes a chassis body 5231 defining openings 5232 through which the jack modules 5110 can be mounted to the chassis body 5231. In the example shown, the chassis body 5231 defines a recess 5235 (FIGS. 45-46) through which the processing unit 5270 may extend to connect to the second printed circuit board 5165. In certain implementations, the chassis body 5231 includes a mounting member 5233 extending into each opening 5232 (see FIGS. 43-44). In the example shown, each mounting member 5233 includes a generally T-shaped body defining

channels 5234 on either side. Each mounting member 5233 is configured to aid in retaining one of the jack modules 5110 in the opening 5232.

[0143] In certain implementations, the jack modules 5110 are installed on the chassis body 5231 from the rear side of the chassis body 5231 (e.g., see FIG. 42). The jack module 5110 slides into the opening 5232 with the guide members 5127 of the jack module 5110 (see FIGS. 17 and 19) positioned on either side of the mounting member 5233. In one implementation, the latching members 5116 of the jack module 5110 slide within the channels 5234 defined by the mounting member 5233 (see FIGS. 43-44).

[0144] In some implementations, each media reading interface 5145 is mounted to a corresponding jack module 5110 after the jack module 5110 is mounted to the chassis body 5231. In other implementations, each media reading interface 5145 is installed on the second printed circuit board 5165 to form a board arrangement 5289 (FIG. 49). The board arrangement 5289 can be mounted to the chassis body 5231 before or after the jack modules 5110 are mounted to the chassis body 5231 (e.g., see FIG. 43).

[0145] In some implementations, the chassis body 5231 includes one or more latching members 5236 that aid in retaining the jack modules 5110 to the chassis body 5231. The example latching members 5236 shown in FIGS. 47 and 48 include flexible tabs 5237 defining at least one shoulder 5238. In certain implementations, each latching member 5236 defines a shoulder 5238 on each side of the flexible tab 5237. In the example shown, each flexible tab 5237 generally defines a mushroom shape. In other implementations, each flexible tab 5237 generally defines a T-shape.

[0146] When the jack modules 5110 are installed on the chassis body 5231, the front ends of the jack modules 5110 are inserted through the openings 5232 of the chassis body 5231 from a rear of the chassis body 5231. As the jack module 5110 is being inserted, one of the latching members 5236 of the chassis body 5231 cams over the ramped surfaces 5124 of the latching members 5123 of the jack modules 5110 (see FIG. 47). When the jack module 5110 has been sufficiently inserted in the chassis 5231, the latching member 5236 of the chassis body 5231 snaps over the latching members 5123 of the jack module 5110 so that the shoulders 5238 of the chassis

latching member 5236 abut against shoulders 5125 of the jack latching member 5123 (see FIG. 48).

[0147] FIG. 51 shows a cross-sectional view of an example plug 5002 inserted within an assembled patch panel 5200. The plug 5002 extends through the fascia opening 5252, the frame opening 5242, and into the socket 5112 of the jack module 5110 mounted to the chassis 5230. The storage member contacts 5034 of the plug 5002 depress the second contacts 5146 of the media reading interface 5145 to lift the second contacts 5146 off the shorting pin 5155. The second printed circuit board 5165 is electrically connected to the second contacts 5146 is configured to sense when the second contacts 5146 are no longer being shorted together by the pin 5155.

[0148] One example processing unit 5270 is shown in FIG. 34C. The processing unit 5270 includes at least a first connector 5271 with which the processing unit 5270 may be connected to the second printed circuit board 5270. In accordance with some aspects, certain types of processing units include guide and/or retaining members that facilitate connecting the processing units to the printed circuit board 5165. For example, the processing unit 5270 includes a retaining member 5274 with which the processing unit 5270 may be secured to the patch panel 5200. In certain implementations, the retaining member 5274 includes a guiding member 5275, at least one latching member 5276, and a depression surface 5277. In the example shown, the retaining member 5274 includes two latching members 5276.

[0149] The example processing unit 5270 also may include a port (e.g., see port 5273 of FIG. 35) configured to receive an electrical cable (e.g., a power cable, a data cable connected to a data network, etc.). In one implementation, the port includes an RJ jack (e.g., an RJ-45 jack). In other implementations, however, the processing unit 5270 may utilize other types of ports. In certain implementations, the processing unit 5270 also includes a second port (e.g., a USB port) at which another type of cable may be connected to the processing unit 5270 (e.g., see port 5273 of FIG. 35).

[0150] FIGS. 34 and 50 show one example support member 5260 suitable for use with the patch panel 5200. The support member 5260 includes a body 5261 having arms 5262 that are configured to attach to the patch panel 5200. For example, in

some implementations, the arms 5262 may attach to the second housing part 5220 of the patch panel 5200 (e.g., to the chassis 5230). In other implementations, the arms 5262 may attach to grounding modules 5209 attached to the patch panel 5200 (e.g., see FIG. 52). In one implementation, the arms 5262 are unitary with the body 5261 of the support member 5260.

[0151] As shown in FIG. 34C, the body 5261 of the support plate 5260 includes a retention section 5264 at which the processing unit 5270 may be secured to the support plate 5260. For example, in some implementations, the support plate 5260 defines a slot 5265 at the retention section 5274 that is configured to receive the guide member 5275 of the retaining processing unit 5270. The body 5261 of the support plate 5260 also may define openings or slots 5266 that are configured to receive the latching members 5276 of the retaining member 5274 of the processing unit 5270. In some implementations, the processing unit 5270 is latched to the support plate 5260 by sliding the processing unit 5270 forwardly relative to the support plate 5260.

[0152] In accordance with some implementations, the support plate 5260 defines a manager. In some such implementations, the body 5261 defines one or more slots 5263 at which cables (e.g., cables terminating at the jack modules 5110) can be secured with cable ties or other retention members. In other implementations, the body 5261 may include one or more raised tabs at which the cable ties or other retention members may be fastened. For example, one example implementation of a suitable cable manager body is shown in FIG. 55E and will be described in more detail herein.

[0153] FIGS. 52-60 show another example patch panel 5400 including another example fascia 5450 mounted to another example frame 5440. The frame 5440 secures to another example chassis 5430 to enclose media reading interfaces 5145 mounted to the second printed circuit board 5165. End caps 5480 pivotally mount to the chassis 5450 to cover the mounting sections of the frame 5440.

[0154] A second example processing unit 5470 including a processor (e.g., processor 206, 217 of FIG. 2) suitable for attachment to the patch panel 5400 is shown in FIG. 55. The second example processing unit 5470 includes a first

connector 5471 that connects the processing unit 5470 to the second printed circuit board 5165. The second processing unit 5470 also include a port 5472 configured to receive an electrical cable (e.g., a power cable, a data cable connected to a data network, etc.). In one implementation, the port 5472 includes an RJ jack (e.g., an RJ-45 jack). In other implementations, however, the processing unit 5470 may utilize other types of ports. In certain implementations, the processing unit 5470 also includes a second port (e.g., a USB port) 547'at which another type of cable may be connected to the processing unit 5470.

[0155] As shown in FIG. 55, the processing unit 5470 also may include retaining members 5474 extending outwardly from sides of the processing unit 5470. In some implementations, the retaining members 5474 are located towards the rear end of the processing unit 5470. In other implementations, the retaining members 5474 may be located at an intermediate position along the sides of the processing unit 5470. Each retaining member 5474 defines a camming surface 5475 and at least one retention tab 5476. In the example shown, each guide member 5474 includes an upwardly extending retention tab 5476 and a downwardly extending retention tab 5476.

[0156] The processing unit 5470 also may include guide members 5477 on one or both sides of the processing unit 5470. In some implementations, the guide members 5477 include one or more rails that extend at least partially between the front and rear of the processing unit 5470. In certain implementations, the guide members 5477 also include a stop 5478 at an end of the rail. In the example shown, the stop 5478 is located at an intermediate position between the front and rear of the processing unit 5470. The stop 5478 extends generally orthogonally from the end of the rail 5477. In one implementation, the guide members 5477 also may include a forward stop 5479.

[0157] A second example cable manager 5460 suitable for use with the patch panel 5400 (see FIG. 53). The cable manager 5460 includes a body 5461 attached to the patch panel 5400. The body 5461 of the manager 5460 defines one or more slots 5463 at which cables (e.g., cables terminating at the jack modules 5110) can be secured with cable ties or other retention members. In some implementations, the body 5461 of the manager 5460 may include raised tabs in place of or in addition to the slots 5463.

[0158] In some implementations, the body 5461 extending between two arms 5462 that are configured to attach to the patch panel 5400. For example, in some implementations, the arms 5462 may attach to a second housing part of the patch panel 5400 (e.g., to the chassis 5430). In other implementations, the arms 5462 may attach to grounding modules 5409 attached to the patch panel 5400 (e.g., see FIG. 52). In one implementation, the arms 5462 are unitary with the body 5461 of the cable manager 5460.

[0159] Certain types of cable managers 5460 also may be configured to organize and/or secure cables routed to the processing unit 5470 when the processing unit 5470 is connected to the patch panel 5400. In some implementations, the example cable manager 5460 includes a support plate 5464 that is spaced from the body 5461 of the manager 5460. In the example shown, the support plate 5464 is generally parallel to the manager body 5461. In certain implementations, the support plate 5464 includes one or more slots or raised tabs 5465 at which one or more cables may be secured to the support plate 5464 using cable ties or other fasteners. For example, cables mounted to the processing unit 5470 may be secured to the support plate 5464 using the raised tabs 5465.

[0160] Certain types of cable managers 5460 also may be configured to support and/or retain the processing unit 5470 when the processing unit 5470 is connected to the patch panel 5400. In some implementations, the cable manager 5460 includes one or more retaining arms 5500 that releasably secure to the processing unit 5470 to the patch panel 5400. For example, the cable manager 5460 may include two spaced retaining arms 5500 that retain the retaining members 5474 at opposite sides of the processing unit 5470. In certain implementations, each retaining arm 5500 is configured to flex or pivot relative to the patch panel 5400.

[0161] As shown in FIG. 56, each retaining arm 5500 includes an elongated member 5510 extending between a mounting section 5520 and a handle 5540. In certain implementations, the elongated member 5510 defines a guiding surface 5515 that facilitates sliding the processing unit 5470 toward the printed circuit board 5165. The mounting section 5520 of the arm 5500 defines a pivot opening 5522 through which a fastener can extend to pivotally mount the arm 5500 to the support plate 5464. In certain implementations, the arm 5500 includes one or more tabs 5524 that

extend outwardly from the mounting section 5520. In the example shown, the arm 5500 includes two spaced tabs 5524.

[0162] A retaining section 5530 is provided on the arm 5500 at a location spaced from the mounting section 5520. In the example shown, the retaining section is provided adjacent the handle 5540. The retaining section 5530 includes at least a first flange 5542 extending outwardly from the elongated member 5510. In the example shown, first and second flanges 5532 extend outwardly from opposite sides of the elongated member 5510. In one implementation, the first and second flanges 5532 extend generally parallel to each other. Each flange 5532 defines an opening or slot 5535 that is sized and configured to receive a retention tab 5476 of the processing unit 5470 (see FIGS. 52-54).

[0163] As shown in FIGS. 59-60, each of the arms 5500 is configured to pivot relative to the support plate 5474. In some implementations, the support plate 5474 includes inner stops 5476 and outer stops 5477 that define inhibit pivoting of the arms 5500 beyond a particular range of movement. For example, the inner and outer stops 5476, 5477 may inhibit movement of the arms 5500 beyond where the handle 5540 of each arm 5500 would be accessible to a user. In the example shown in FIGS. 59-60, a first arm 5500 is shown in a first position adjacent the inner stop 5476 and a second arm 5500 is shown in a second position adjacent the outer stop 5477.

[0164] To mount the processing unit 5470 to the second printed circuit board 5165 of the second patch panel 5400, a user moves the arms 5500 toward the second position. The user then slides the processing unit 5470 toward the second printed circuit board 5165. When the processing unit 5470 is slid sufficiently forward, the stop 5478 on the processing unit 5470 contacts the tabs 5524 of the arms 5500. Continuing to slide the processing unit 5470 forward applies a force to the tabs 5524, which causes the arms 5500 to pivot toward the first position. Pivoting the arms 5500 to the first position causes the retaining sections 5530 of the arms to contact the retaining members 5574 on the processing unit. For example, the slots 5535 of the retaining flanges 5532 of the arms 5500 may receive the tabs 5476 of the retaining members 5474 of the processing unit 5470.

[0165] To release the second processing unit 5470 from the patch panel 5400, a user pulls the retaining arms 5500 (e.g., via the grip portions 5540) away from the processing unit 5470. Pivoting the arms 5500 toward the second position causes the tabs 5524 of the arms 5500 to apply a levering force to the stops 5478 of the processing unit 5470. In some implementations, the levering force applied to the stops 5478 may be sufficient to disconnect the processing unit 5470 from the second printed circuit board 5165 (e.g., even when a sufficient gripping surface of the processing unit 5470 is not available to the user). Indeed, in some implementations, the levering force applied to the stops 5478 is sufficient to slide the processing unit 5470 rearwardly of the patch panel 5400.

[0166] FIGS. 61-71 show a third example patch panels 5300 at which multiple jack modules 5110 can be assembled. The third example patch panel 5300 includes two rows of front cable ports 5305 at which the sockets 5112 of the jack modules 5110 are accessible. In some implementations, the jack modules 5110 of the second row are oriented upside-down relative to the jack modules 5110 of the first row (e.g., see FIGS. 61-62).

[0167] In certain implementations, the media reading interfaces 5145 associated with the jack modules 5110 of the second row are oriented upside-down relative to the media reading interfaces 5145 associated with the jack modules 5110 of the first row. For example, a first row of media reading interfaces 5145 may be mounted to a first edge of the second printed circuit board 5165 and a second row of media reading interfaces 5145 may be mounted to a second edge of the second printed circuit board 5165 (FIG. 64).

[0168] In some implementations, the patch panel 5300 shown in FIG. 61 is sized at 2 RU. In one example implementation, the patch panel 5300 shown in FIG. 61 defines forty-eight cable ports 5305 with twenty-four ports in each row. In certain implementations, the patch panel 5300 shown in FIG. 61 is sized to be smaller than 2 RU. In certain implementations, the patch panels 5200, 5400 are sized at 1 RU and define twenty-four front ports 5205, 5405 each. In other implementations, however, each patch panel 5200, 5300, 5400 may define greater or fewer front ports.

[0169] The third patch panel 5300 includes mounting members 5306. The mounting member 5306 defines one or more openings 5307 through which a fastener may extend to secure the third patch panel 5300 to rails or posts of a frame, a rack, a cabinet, or other telecommunications equipment structures. End caps can be installed over the mounting members 5306. In one implementation, the end caps may be larger versions of the end caps 5280 shown in FIGS. 37-39. In other implementations, the end caps may be configured to snap-fit, friction-fit, or otherwise secure over the mounting members 5306 to cover the openings 5307.

[0170] In some implementations, the third patch panel 5300 includes a first housing part 5310 and a second housing part 5320 (see FIG. 61). The first housing part 5310 defines the front ports 5305. In some implementations, the first housing part 5310 includes a frame 5340. In certain implementations, the first housing part 5310 also includes a fascia 5350 that is removeably coupled to the frame 5340. In certain implementations, the third patch panel 5300 also includes a grounding connection. The grounding connection may connect to the shields 5134 of the jack modules 5110 and/or to the second printed circuit board 5165.

[0171] The second housing part 5320 includes at least one or more jack modules 5110 mounted to a chassis arrangement 5330. In certain implementations, the second housing part 5320 also includes one or more media reading interfaces 5145. In one implementation, the third patch panel 5300 has the same number of jack modules 5110 and media reading interfaces 5145. In other implementations, the third patch panel 5300 has more jack modules 5110 than media reading interfaces 5145. For example, in one implementation, the third patch panel 5300 may have twice as many jack modules 5110 than media reading interfaces 5145. In other implementations, the third patch panel 5300 may include more media reading interfaces 5145 than jack modules 5110. For example, in certain implementations, each jack module 5110 may define two plug sockets. In such implementations, each plug socket may have its own media reading interface 5145.

[0172] In some implementations, the media reading interfaces 5145 are mounted to a printed circuit board 5165. Multiple media reading interfaces 5145 mount over at least a first edge of the second printed circuit board 5165. In the example shown in FIGS. 61 and 64, multiple media reading interfaces 5145 mount over different (e.g.,

opposite) edges of the second printed circuit board 5165. Each media reading interface 5145 also is connected to at least one jack module 5110. The second printed circuit board 5165 in installed at the third patch panel 5300. For example, in FIG. 61, the second printed circuit board 5165 is configured to be held between the first housing part 5310 and the second housing part 5320.

[0173] In some implementations, the first housing part 5310 is fastened to the second housing part 5320. In the example shown, the frame 5340 defines one or more first openings 5312 (FIG. 63), the second printed circuit board 5165 defines one or more second openings 5322 (FIG. 64), and the chassis arrangement 5230 defines one or more third openings 5324 (FIGS. 65-66). One or more fasteners (e.g., screws, bolts, etc.) 5315 are configured to extend through the first, second, and third openings 5312, 5322, 5324 to secure the second printed circuit board 5165 between the frame 5340 and the chassis arrangement 5330. In certain implementations, the fastener 5315 is configured to extend through a spacer 5318 positioned between the frame 5340 and the second printed circuit board 5165.

[0174] In the example shown, a threaded fastener 5315 is configured to extend through the openings 5312, 5322, 5324. In some implementations, the threaded fastener 5315 is configured to screw directly into the chassis arrangement 5330 (e.g., into the passages 5324 defined in the chassis arrangement 5330). In other implementations, however, the threaded fastener 5315 is configured to screw into a threaded insert 5325. In some such implementations, the threaded insert 5325 may abut against a portion of the chassis arrangement 5330 from a rear of the chassis arrangement 5330. For example, the threaded insert 5325 may mount at least partially within the passage 5324 defined in the arrangement 5330 and abut against a forward or intermediate surface of the arrangement 5330.

[0175] One example implementation of a frame 5340 is shown in FIG. 63. The frame 5340 includes a frame body 5341 defining at least one opening 5342 through which a plug 5002 can access a socket 5112 of a jack module 5110. In certain implementations, the openings 5342 are sufficiently large to enable the front of both the jack module 5110 and the media reading interface 5145 to be viewing from a front of the frame 5340 when the first and second housing parts 5310, 5320 are

mounted together. For example, the viewing channel 5153 of the media reading interface 5145 may be viewing through the frame opening 5342.

[0176] In certain implementations, the frame body 5341 defines upper and lower bent flanges 5343 that wrap around portions of the second housing part 5320 to aid in retaining the first and second housing parts 5310, 5320. In certain implementations, the lower flange 5343 may aid in retaining the second printed circuit board 5165 within the patch panel 5300. For example, the lower bent flange 5343 of the frame body 5341 may extend over a bottom of the second circuit board 5165 to hold the second circuit board 5165 within the channel 5150 defined in the second media reading interface (e.g., see FIG. 71)

[0177] As noted above, the frame body 5341 also defines openings 5312 through which fasteners (e.g., screws, bolts, rivets, etc.) 5315 may be inserted to secure the first housing part 5310 to the second housing part 5320. In some implementations, the frame body 5341 also defines openings to accommodate components mounted to the second housing part 5320. For example, the frame body 5341 may define openings 5346, 5347 to accommodate a cable port 5166 and light indicators 5167, respectively, as will be described in more detail herein.

[0178] In some implementations, the frame body 5341 defines the mounting members 5206. For example, side flanges of the frame 5341 define the openings 5307 through which fasteners may be extended. In other implementations, separate mounting members 5306 may connect to the frame body 5341. In other implementations, the mounting members 5306 may be defined by the fascia 5350. In still other implementations, the mounting members 5306 may connect to the second housing part 5320 (e.g., to the chassis 5330).

[0179] The frame body 5341 also is configured to receive the fascia 5350. In some implementations, the frame body 5341 defines openings 5344 configured to receive retaining members 5358 of the fascia 5350. In other implementations, the frame body 5341 may define retaining members that fit into openings defined in the fascia 5350. In certain implementations, the frame body 5341 also includes tabs 5345 that extend forwardly from some of the openings 5342 to be received in slots defined in the fascia 5350 to aid in aligning and installing the fascia 5350 on the frame 5340.

[0180] One example implementation of a fascia 5350 is shown in FIG. 62. The fascia 5350 includes a fascia body 5351 defining a plurality of openings 5352 that align with the openings 5342 of the frame body 5341 to provide access to the jack module socket 5112 from the front 5301 of the patch panel 5300. In some implementations, the openings 5352 of the fascia body 5351 are smaller than the openings 5342 of the frame body 5341. In certain implementations, the openings 5352 of the fascia body 5351 define keyways 5353 for the plugs 5002. They keyways 5353 of the fascia body 5351 are oriented to align with the cutouts 5113 of the jack modules 5110 when the first and second housing parts 5310, 5320 are mounted together.

[0181] In some implementations, the fascia body 5351 includes tabs 5354 that extend rearward from the fascia body 5351. In the example shown, the tabs 5354 generally align with the openings 5352. In other implementations, however, the fascia body 5351 may include greater or fewer tabs 5354. The tabs 5354 extend over the upper and lower bend flanges 5343 of the frame body 5341 when the fascia 5350 is mounted to the frame 5340. In one implementation, the tabs 5354 friction-fit over the flanges 5343 of the frame to aid in retaining the fascia 5350 to the frame 5340. In certain implementations, some of the tabs 5354 define openings, cutouts 5355, or inner protrusions that may aid in retaining the fascia 5350 to the frame 5340.

[0182] As noted above, the fascia body 5351 also includes retaining members 5358 to secure the fascia body 5351 to the frame body 5341. In some implementations, the fascia body 5351 includes at least one retaining member 5358 at each side of the fascia body 5351. In other implementations, the fascia body 5351 includes multiple retaining members 5358 at each side of the fascia body 5351. In some implementations, the retaining members 5358 may secure (e.g., latch, press-fit, snap-fit, etc.) to the frame body 5341 via latching openings 5344. In other implementations, the retaining members 5358 may extend through the openings 5344 and secure to the chassis 5330 of the second housing part 5320.

[0183] In some implementations, the fascia body 5351 also defines openings to accommodate components mounted to the second housing part 5320. For example, the fascia body 5351 may define openings 5356, 5357, 5359 to accommodate a cable

port 5166 and light indicators 5167 of the second printed circuit board 5165. One example implementation of a printed circuit board 5165 including a cable port 5166 and light indicators 5167 will be described in more detail herein.

[0184] One example chassis arrangement 5330 is shown in FIGS. 65-66. The chassis arrangement 5330 includes a first chassis body 5331 and a second chassis body 5331' that are configured to attach to the frame 5340. In the example shown, each chassis body 5331, 5331' defines a recess 5335, 5335' that cooperate to define a passage through which a processing unit (e.g., processing unit 5270 of FIG. 34C, processing unit 5270' of FIG. 55, etc.) may extend to connect to the second printed circuit board 5165.

[0185] In some implementations, some of the openings 5322 through which the fasteners pass to attach the chassis arrangement 5330 to the frame 5340 are defined in the first chassis body 5331 and others of the openings 5322 are defined in the second chassis body 5331'. For example, the first chassis body 5331 shown in FIG. 65 defines three passages 5322 on either side of the recess 5335 and the second chassis body 5331' shown in FIG. 66 defines three passages 5322 on either side of the recess 5335'. The passages 5322' defined by the second body 5331' are laterally offset from the passages 5322 defined by the first body 5331. In certain implementation, the first and second bodies 5331, 5331' define complementary protrusions and recesses that fit together when the chassis bodies 5331, 5331' are mounted to the frame 5340. In one implementation, the passages 5322 are defined in the protrusions (e.g., see FIGS. 65-66).

[0186] Each chassis body 5331, 5331' defines openings 5332, 5332' through which the jack modules 5110 can be mounted to the chassis bodies 5331, 5331'. In the example shown, each chassis body 5331, 5331' defines a row of openings 5332, 5332'. In certain implementations, each chassis body 5331, 5331' includes a mounting member 5333, 5333' located within each opening 5332, 5332'. In the example shown in FIGS. 65 and 66, each mounting member 5333, 5333' includes a generally T-shaped body defining channels 5334, 5334' on either side. Each mounting member 5333, 5333' is configured to aid in retaining one of the jack modules 5110 in the opening 5232.

[0187] In certain implementations, the jack modules 5110 are installed on the chassis bodies 5331, 5331' from the rear side of the chassis arrangement 5330 (e.g., FIG. 61). The jack module 5110 slides into the opening 5332, 5332' with the guide members 5127 of the jack module 5110 (see FIGS. 17 and 19) positioned on either side of the mounting member 5333, 5333'. In one implementation, the latching members 5116 of the jack module 5110 slide within the channels 5334, 5334' defined by the mounting member 5333, 5333'.

[0188] In some implementations, each media reading interface 5145 is mounted to a corresponding jack module 5110 after the jack module 5110 is mounted to the chassis arrangement 5330. In other implementations, each media reading interface 5145 is installed on the second printed circuit board 5165 to form a board arrangement 5389 (FIG. 64). The board arrangement 5389 can be mounted to the chassis arrangement 5330 before or after the jack modules 5110 are mounted to the chassis arrangement 5330.

[0189] In some implementations, each chassis body 5331, 5331' includes one or more latching members 5336 that aid in retaining the jack modules 5110 to the chassis body 5331, 5331'. The example latching members 5336 shown in FIG. 65 include flexible tabs 5337 defining at least one shoulder 5338. In certain implementations, each latching member 5336 defines a shoulder 5338 on each side of the flexible tab 5337. In the example shown, each flexible tab 5337 generally defines a mushroom shape. In other implementations, each flexible tab 5337 generally defines a T-shape.

[0190] When the jack modules 5110 are installed on the chassis arrangement 5330, the front ends of the jack modules 5110 are inserted through the openings 5332, 5332' of the chassis bodies 5331, 5331' from a rear of the chassis bodies 5331, 5331'. As the jack module 5110 is being inserted, one of the latching members 5336 of the chassis body 5331, 5331' cams over the ramped surfaces 5124 of the latching members 5123 of the jack modules 5110 (see FIG. 67). When the jack module 5110 has been sufficiently inserted in the chassis body 5331, 5331', the latching member 5336 of the chassis body 5331, 5331' snaps over the latching members 5123 of the jack module 5110 so that the shoulders 5338 of the chassis latching member 5336 abut against shoulders 5125 of the jack latching member 5123 (see FIG. 67).

[0191] In accordance with some aspects, the second printed circuit board 5165 is configured to receive a processing unit (e.g., processing unit 5270 of FIG. 34C, processing unit 5470 of FIG. 55).

[0192] In accordance with some aspects, the cable manager 5360 is configured similarly to the cable manager 5260 of the patch panel 5200 (see FIGS. 67-70). The cable manager 5360 includes at least one rail 5361 that defines slots 5363 at which cable may be secured to the rail 5361 using cable ties or other fasteners. The cable manager 5360 also includes arms 5362 that secure the rail 5361 to the patch panel 5300. In some implementations, the cable manager 5360 includes multiple rails 5361, 5361' each defining slots 5363, 5363' and including arms 5362, 5362' to secure the rails 5361, 5361' to the patch panel 5300. In certain implementations, at least one of the rails 53

[0193] One example cable manager 5360 includes a first rail 5361 (FIGS. 69) and a second rail 5361' (FIG. 70). The first rail 5361 also defines a retention section 5364 that is configured to receive the processing unit 5270. The retention surface 5364 defines a recess 5365 through which the guide member 5275 of the processing unit 5270 can extend to connect to the second printed circuit board 5165 of the patch panel 5300. The retention section 5364 also includes openings 5366 at which retaining members 5276 of the processing unit 5270 latch to secure the processing unit 5270 to the patch panel 5300. In the example shown, the retention section 5364 also includes raised tabs 5367 at which cables routed to the processing unit 5270 may be managed

[0194] FIGS. 72-78 show a fourth example patch panel 5600. The fourth example patch panel 5600 includes a fascia 5650 (FIGS. 73-75), a frame 5640 (FIGS. 76-78), and a chassis 5630 (see FIG. 72). A second printed circuit board 5165 is mounted between the frame 5640 and the chassis 5630. For example, the fourth patch panel 5600 can be assembled as described above with respect to any of patch panels 5200, 5300, and 5400. A grounding arrangement 5609 (FIG. 78) connects to the frame 5640.

[0195] A cable manager 5660 is configured to mount to the fourth patch panel 5600 (e.g., to a grounding plate arrangement 5609 of the patch panel 5600). In certain

implementations, the cable manager 5660 includes multiple rails 5661 at which cables can be secured (e.g., using cable ties). In the example shown, the cable manger 5560 includes a rail 5661, 5661' for each row of jack modules 5110. In some implementations, the cable manager 5660 utilizes the retaining arms 5500 described above with respect to FIGS. 52-60.

[0196] One example implementation of a fascia 5250 is shown in FIG. 73-75. The fascia 5650 includes a fascia body 5651 defining a plurality of openings 5652 through which a plug 5002 can access a socket 5112 of a jack module 5110 from the front of the patch panel 5600. In some implementations, the openings 5652 of the fascia body 5651 are smaller than the openings 5642 of the frame body 5641. In certain implementations, the openings 5652 of the fascia body 5651 define keyways 5653 for the plugs 5002. They keyways 5653 of the fascia body 5651 are oriented to align with the cutouts 5113 of the jack modules 5110 when the patch panel 5600 is assembled.

[0197] In some implementations, the fascia body 5651 includes tabs 5654 that extend rearward from the fascia body 5651. In the example shown, the tabs 5654 generally align with the openings 5652. In other implementations, however, the fascia body 5651 may include greater or fewer tabs 5654. The tabs 5654 extend over the upper and lower bend flanges 5643 of the frame body 5641 when the fascia 5650 is mounted to the frame 5640. In one implementation, the tabs 5654 friction-fit over the flanges 5643 of the frame to aid in retaining the fascia 5650 to the frame 5640. In certain implementations, some of the tabs 5654 define openings, cutouts, or inner protrusions that may aid in retaining the fascia 5650 to the frame 5640 (see FIG. 74).

[0198] As noted above, the fascia body 5651 also includes retaining members 5658 to secure the fascia body 5651 to the frame body 5641. In some implementations, the fascia body 5651 includes multiple retaining members 5658 spaced along a one side of the fascia body 5651. In the example shown, the fascia body 5651 includes multiple hooks 5658 spaced along a bottom of the fascia body 5651. The retaining members 5658 extend through the frame body 5641 and latch in the openings 5644. In certain implementations, the top of the fascia body 5651 may be configured to snap, pivot, or otherwise secure to the top of the frame 5640. Of course, this

attachment mechanism can be used between any of the frames and fascias disclosed herein.

[0199] In some implementations, the fascia body 5651 also defines openings to accommodate components mounted to the chassis 5630 or second printed circuit board 5165. For example, the fascia body 5651 may define openings 5656, 5657, 5659 to accommodate a cable port 5166 and light indicators 5167 of the second printed circuit board 5165. One example implementation of a printed circuit board 5165 includes a cable port 5166, a first light indicator, and three additional light indicators 5167.

[0200] Labels may be installed on the fascia body 5651. In some implementations, labels are installed on a front of the fascia body 5651. For example, labels may be glued, latched, or otherwise secured to a front of the fascia body 5651. In other implementations, however, labels may be installed behind a clear or opaque fascia body 5651. In certain implementations, one or more label holders 5290 (FIGS. 40-41) may be mounted to back of the fascia body 5651. For example, the label holder may be mounted within one or more tracks 5655 (FIG. 75).

[0201] One example implementation of a frame 5640 is shown in FIGS. 76-78. The frame 5640 includes a frame body 5641 defining at least one opening 5642 that align with the openings 5642 of the frame body 5241 to provide access to a socket 5112 of a jack module 5110. In certain implementations, the openings 5642 are sufficiently large to enable the front of both the jack module 5110 and the media reading interface 5145 to be viewing from a front of the frame 5640 when the frame 5640 and chassis 5630 are mounted together. For example, the viewing channel 5153 of the media reading interface 5145 may be viewing through the frame opening 5642.

[0202] In certain implementations, the frame body 5641 defines upper and lower bent flanges 5643 that wrap around portions of the chassis 5630 to aid in retaining the second printed circuit board 5165 within the patch panel 5600. For example, the lower bent flange 5643 of the frame body 5641 may extend over a bottom of the second circuit board 5165 to hold the second circuit board 5165 within the channel 5150 defined in the second media reading interface (e.g., see FIG. 51).

[0203] As noted above, the frame body 5641 also defines openings 5612 through which fasteners (e.g., screws, bolts, rivets, etc.) may be inserted to secure the frame 5640 to the chassis 5630. In some implementations, the frame body 5641 also defines openings to accommodate components mounted to the chassis 5630 and second printed circuit board 5165. For example, the frame body 5641 may define openings 5646, 5647 to accommodate a cable port 5166 and light indicators 5167, respectively, as described herein.

[0204] In some implementations, the frame body 5641 defines the mounting members 5606. For example, side flanges of the frame 5641 define the openings 5607 through which fasteners may be extended. In other implementations, separate mounting members 5606 may connect to the frame body 5641. In other implementations, the mounting members 5606 may be defined by the fascia 5650. In still other implementations, the mounting members 5606 may connect to the chassis 5630.

[0205] The frame body 5641 also is configured to connect to the fascia 5650. In some implementations, the frame body 5641 defines openings 5644 configured to receive retaining members 5658 of the fascia 5650 (FIG. 78). In other implementations, the frame body 5641 may define retaining members that fit into openings defined in the fascia 5650. In certain implementations, the frame body 5641 also includes tabs 5645 that extend forwardly from some of the openings 5642 to be received in slots defined in the fascia 5650 to aid in aligning and installing the fascia 5650 on the frame 5640.

[0206] As shown in FIGS. 74 and 78, end caps 5680 may be mounted over the side flanges of the frame 5641 to cover the mounting members 5606. In the example shown, each end cap 5680 includes a body that is sized and shaped to cover the front of one side flange of the frame 5641. Each end cap 5680 also includes mounting members by which the end cap body is attached to the patch panel 5600. In some implementations, the mounting members attach to the fascia body 5651 (FIG. 74).

[0207] A number of embodiments of the invention defined by the following claims have been described. Nevertheless, it will be understood that various modifications to the described embodiments may be made without departing from the spirit and

scope of the claimed invention. Accordingly, other embodiments are within the scope of the following claims.

WE CLAIM:

1. A connector arrangement comprising:

a plug nose body having a first side and an opposite, second side, the first side of the plug nose body being configured to hold a plurality of first contacts, which are electrically connected to conductors of an electrical segment of communications media, the second side of the plug nose body defining a cavity;

a printed circuit board positioned within the cavity of the plug nose body, the printed circuit board including a storage device configured to store information pertaining to the electrical segment of communications media, the storage device being electrically connected to a plurality of second contacts, the second contacts being configured to enable the stored information to be read from the storage device by a media reading interface; and

a plug cover member that encloses the printed circuit board within the cavity, the plug cover defining a plurality of slotted openings through which the second contacts are exposed.

2. The connector arrangement of claim 1, wherein the main signal contacts are arranged at a front end of the plug housing.

3. The connector arrangement of claim 1, wherein the plug nose body includes a finger tab protruding from the second side of the plug nose body, the finger tab including a latch surface for latching to a connector assembly.

4. The connector arrangement of claim 1, wherein the plug cover member defines a key member that corresponds to a keyway of a connector assembly.

5. The connector arrangement of claim 1, wherein the printed circuit board defines a first side and a second side, the first side including the second contacts and the second side including the storage device, the second contacts being electrically coupled to the storage device.

6. The connector arrangement of claim 5, wherein the second side of the printed circuit board is located opposite the first side.

7. A jack module comprising:

a jack body having a front, a rear, a first end, a second end, a first side, and a second side, the jack body defining a socket configured to receive a plug from the front of the jack body, the second end of the jack body defining a cutout region that provides access to the socket through the second end of the jack body;

a plurality of plug contacts positioned within the jack body, at least a portion of the plug contacts extending into the socket from the first end of the jack body; and

a plurality of terminating contacts positioned within the jack body, the terminating contacts being electrically connected to the plug contacts, the terminating contacts being configured to terminate at least one electrical media segment.

8. The jack module of claim 7, further comprising a printed circuit board positioned within the jack body, the printed circuit board electrically connecting the first plug contacts and the terminating contacts.

9. The jack module of claim 8, wherein the terminating contacts include insulation displacement contacts.

10. The jack module of claim 7, wherein the jack module includes at least one plug latching member positioned within the cutout region, each plug latching member including a camming surface and a shoulder.

11. The jack module of claim 7, wherein the first end of the jack body opposes the second end of the jack body.

12. A media reading interface comprising:

a housing defining a channel that is configured to receive a printed circuit board, the housing including a first housing part and a second housing part; and

a plurality of contact members retained between the first and second housing parts, the contact members having first sections that extend outwardly from the housing and second sections that extend into the channel.

13. The media reading interface of claim 12, further comprising a shorting pin at least partially enclosed within the housing, the shorting pin being positioned to extend across at least two of the contact members, wherein the contact members are configured to flex between at least a first position, in which the two contact members touch the shorting pin, and a second position, in which the two contact members are spaced from the shorting pin.

14. The media reading interface of claim 12, further comprising a viewing channel extending through the first housing part between the channel and a front of the housing.

15. A connector assembly comprising:

a jack module housing having a top, a bottom, a front, a rear, a first side and a second side, the jack module defining a socket that is configured to receive a plug connector from the front of the jack module, the jack module also defining a cutout region at the bottom of the jack module, and the jack module also including first and second guide channels positioned at the bottom of the jack module on either side of the cutout region;

a plurality of first plug contacts located in the jack module, at least a portion of the plug contacts extending into the socket from the top of the jack module;

a media reading interface housing having a top, a bottom, a front, a rear, a first side, and a second side, the media reading interface housing defining a channel configured to receive a printed circuit board, the media reading interface housing also including guides at the top of the media reading interface housing, the guides being configured to fit within the guide channels to facilitate mounting the media reading interface housing to the jack module housing;

a plurality of second plug contacts mounted to the media reading interface, the second plug contacts having first sections that extend through the cutout region of the jack module housing and into the socket from the bottom of the jack module, the second plug contacts being electrically isolated from the first plug contacts.

16. The connector arrangement of claim 15, wherein the jack module housing includes a termination section at which at least one insulation displacement contact

is mounted, each insulation displacement contact being electrically connected to one of the first plug contacts.

17. A patch panel comprising:

a frame including a frame body having a first side and a second side, the frame body defining a plurality of openings extending between the first and second sides of the frame body;

a fascia including a fascia body mounted to the first side of the frame body, the fascia body defining a plurality of openings, each opening being aligned with one of the openings of the frame body;

a chassis including a chassis body mounted to the second side of the frame body, the chassis body defining a plurality of openings that align with the openings of the frame body;

a plurality of jack modules mounted in the openings of the chassis body, each jack module including a first plurality of contacts;

a printed circuit board positioned between the frame and the chassis, the printed circuit board extending generally parallel with the openings of the frame; and

a plurality of media reading interfaces mounted to the printed circuit board, each media reading interface being connected to one of the jack modules mounted to the chassis body, and each media reading interface including a second plurality of contacts that extend into the respective jack module.

18. The patch panel of claim 17, further comprising a processing unit including at least a first connector with which the processing unit connects to the printed circuit board of the patch panel.

19. The patch panel of claim 18, further comprising a cable manager configured to attach to the patch panel, the cable manager being configured to aid in retaining the processing unit to the printed circuit board.

20. The patch panel of claim 19, wherein the cable manager includes at least one flexible retaining arm.

21. The patch panel of claim 19, wherein the cable manager includes a flange defining a recess through which the processing unit extends, the flange cooperating with a rail to surround the processing unit.

22. The patch panel of claim 17, wherein the frame body includes bent flanges that aid in retaining the printed circuit board between the frame and the chassis.

23. The patch panel of claim 17, wherein each media reading interface includes a viewing channel through which a corresponding light indicator on the printed circuit board shines, wherein each of the frame openings is sufficiently large to

24. The patch panel of claim 17, wherein the jack modules are arranged in a first row and a second row, and wherein the media reading interfaces are arranged in a first row along a first edge of the printed circuit board and a second row along a second edge of the printed circuit board.

25. The patch panel of claim 17, wherein the jack modules are arranged in a single row.

26. A cable manager for a patch panel comprising:

a first rail defining a plurality of slots;

first and second arms extending from the first rail to mount the first rail to the patch panel;

a support plate extending generally parallel to the first rail; and

first and second retaining arms attached to the support plate, the retaining arms being configured to flex outwardly to releasably receive a processing unit therebetween.

27. The cable manager of claim 26, wherein each retaining arm includes upper and lower bent flanges, each flange defining an opening sized to receive a latching member of the processing unit.

28. The cable manger of claim 26, wherein each retaining arm includes a gripping portion by which a user operates the retaining arms.

29. A method of determining that a connector arrangement has been received within a connector assembly, the connector assembly including a plurality of main contacts and a plurality of flexible secondary contacts that are electrically isolated from the main contacts, the connector assembly also including a shorting pin extending across at least a first and second of the flexible secondary contacts, the method comprising:

applying a signal to at least the first secondary contact prior to inserting the connector arrangement into the connector assembly;

determining that the second secondary contact is shorted to the first secondary contact;

inserting the connector arrangement into the connector assembly including moving the flexible secondary contacts away from the shorting pin;

applying another signal to at least the first secondary contact; and

determining that the second secondary contact is not shorted to the first secondary contact.

30. A method of manufacturing a connector arrangement comprising:

providing a plug body having a first side and a second side, the first side of the plug body including a key member and a latching tab, and the second side of the plug body enclosing a plurality of main contacts;

mounting a storage device within the cavity of the key member; and

closing the cavity with a cover member.

31. The method of claim 30, further comprising molding the plug body with the cavity in the key member.

32. The method of claim 30, further comprising eliminating material in the key member to form the cavity.

33. The method of claim 30, wherein mounting the storage device comprises sliding the storage device along guides formed in the cavity of the key member.

34. The method of claim 30, wherein closing the cavity comprises latching the cover member to inner surfaces of the key member.

35. The method of claim 30, wherein the storage device includes an EEPROM chip and wherein the method further comprises mounting the EEPROM chip to one side of a printed circuit board.

36. The method of claim 35, further comprising positioning contact pads on another side of the printed circuit board, wherein mounting the storage device within the cavity including mounting the printed circuit board within the cavity with the contact pads facing in an opposite direction from the main contacts.

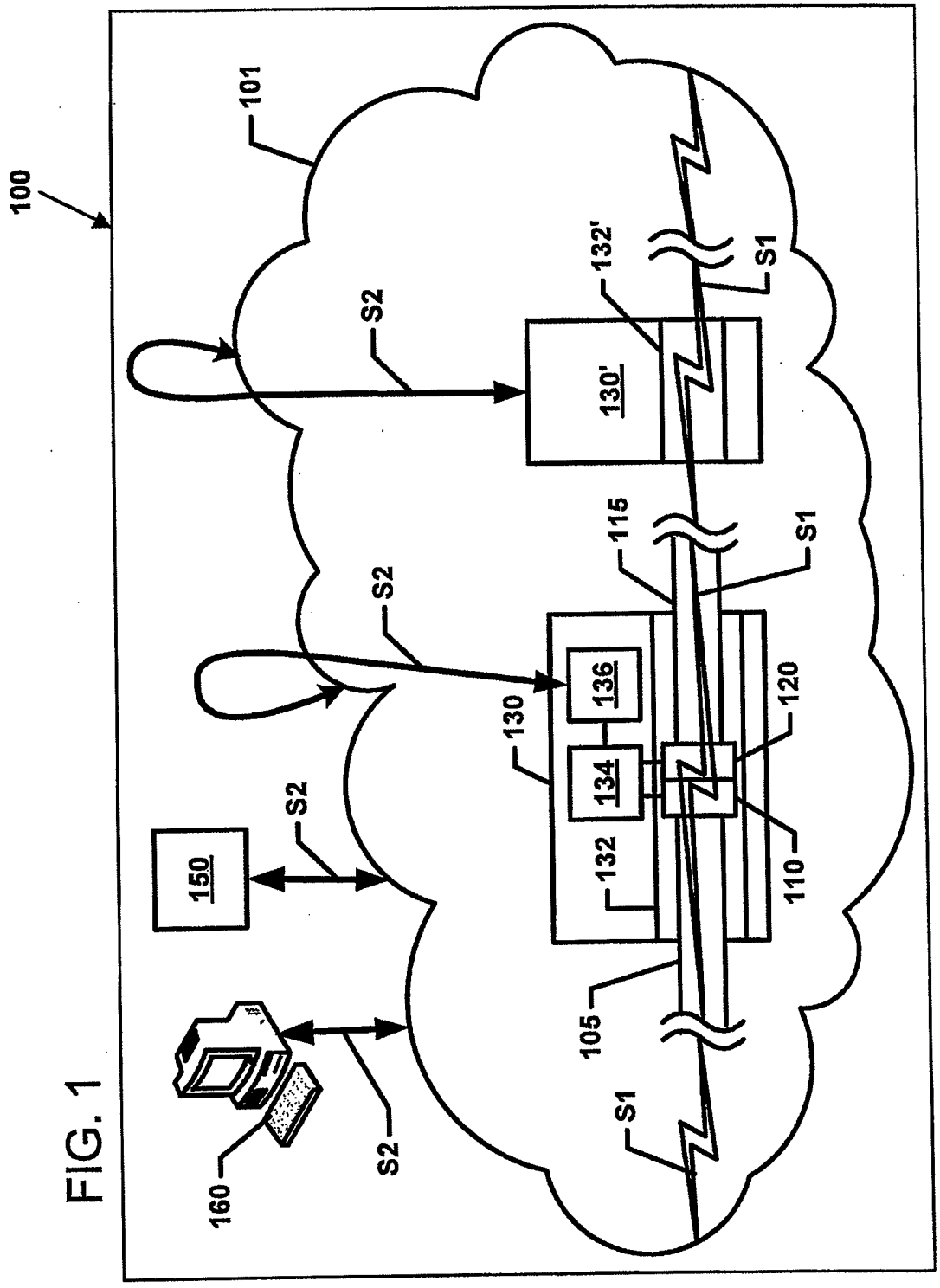
100
101
S2
130'
132'
S1
115
S1
S2
136
130
134
120
110
132
150
S2
105
S1
160
S2

FIG. 1

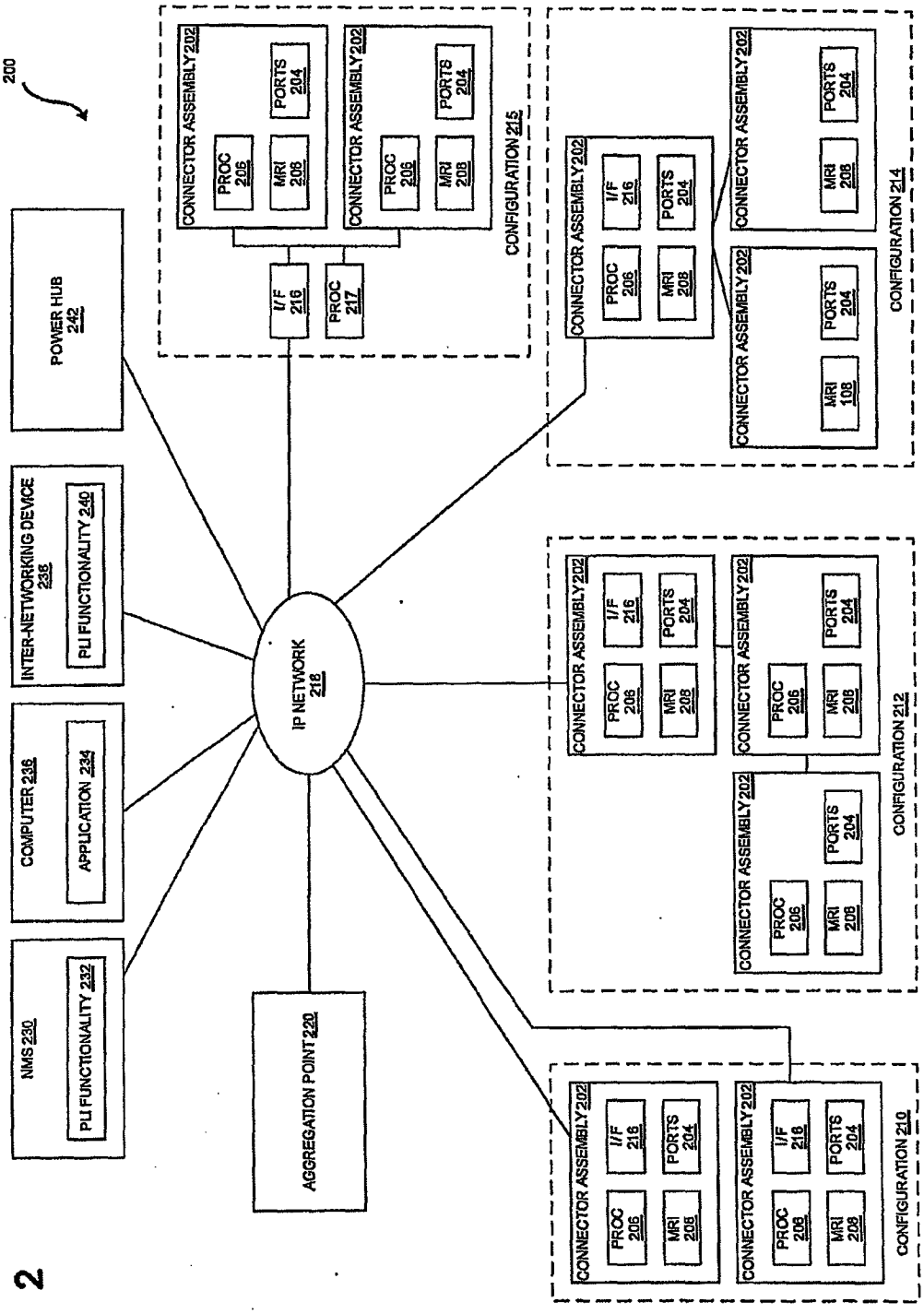
200
POWER HUB 242
INTER-NETWORKING DEVICE 238
PLI FUNCTIONALITY 240
COMPUTER 236
APPLICATION 234
NMS 230
PLI FUNCTIONALITY 232
IP NETWORK 218
AGGREGATION POINT 220
CONFIGURATION 215
CONFIGURATION 214
CONFIGURATION 212
CONFIGURATION 210
CONNECTOR ASSEMBLY 202
PROC 206
MRI 208
PORTS 204
I/F 216
PROC 217

FIG. 2

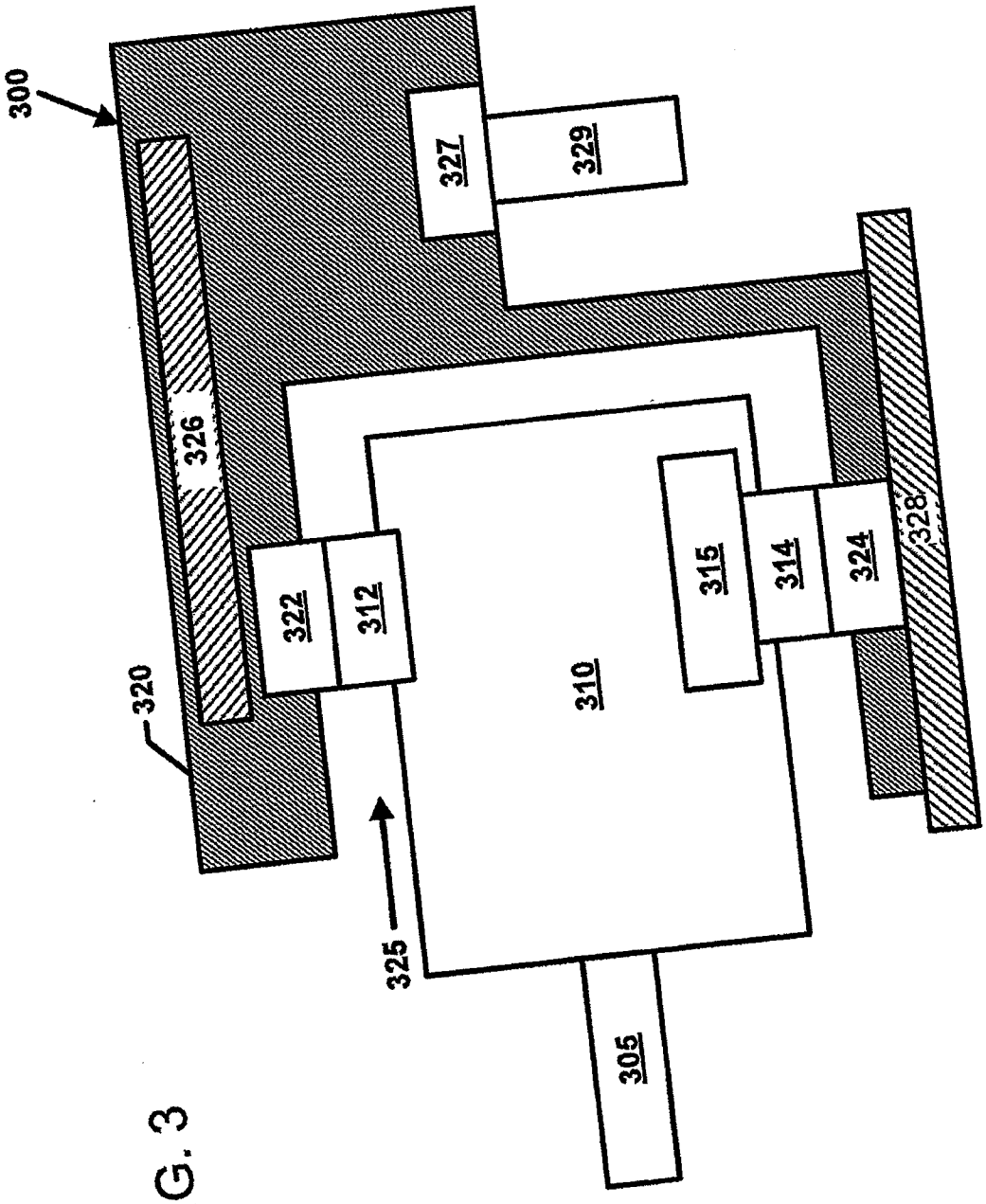

FIG. 3

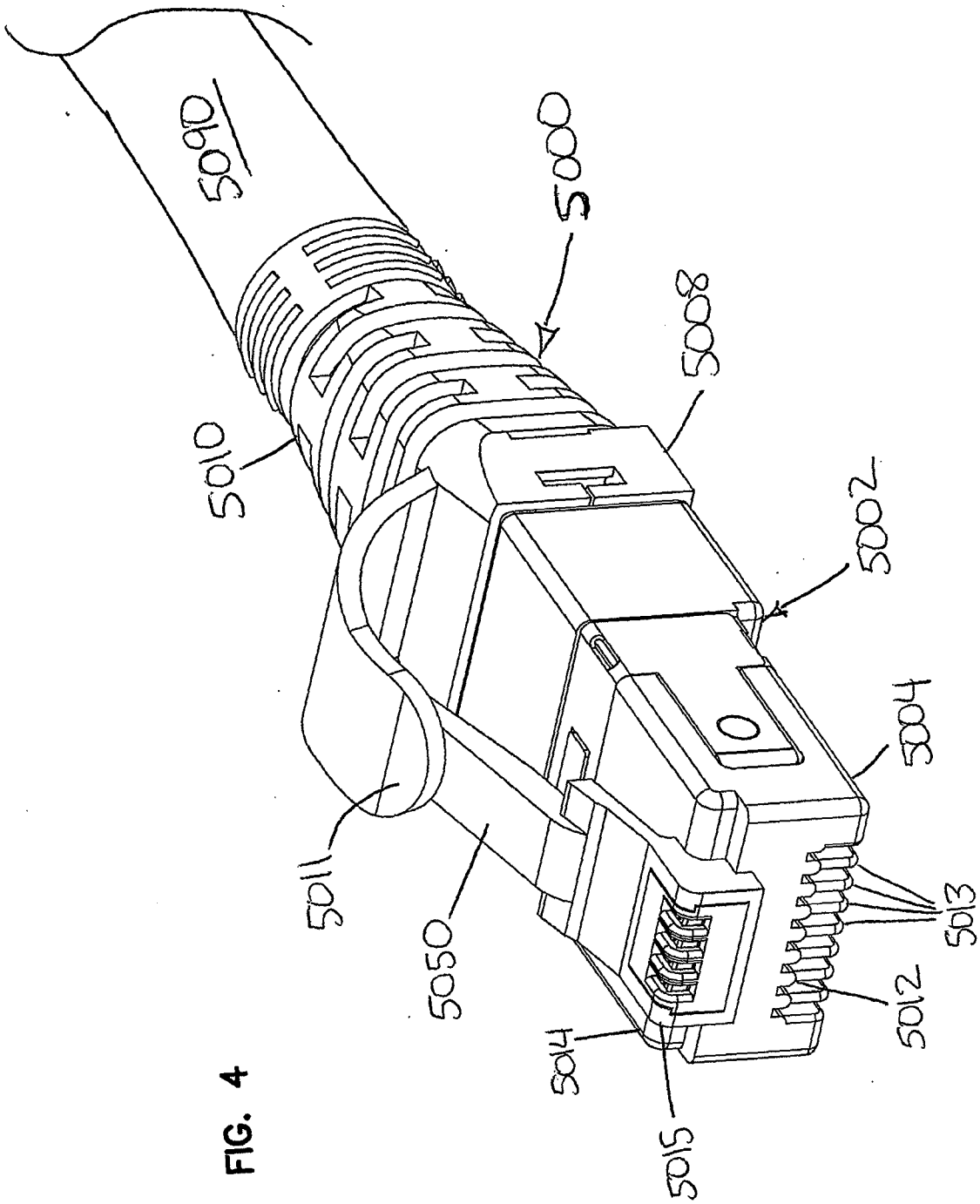

FIG. 4

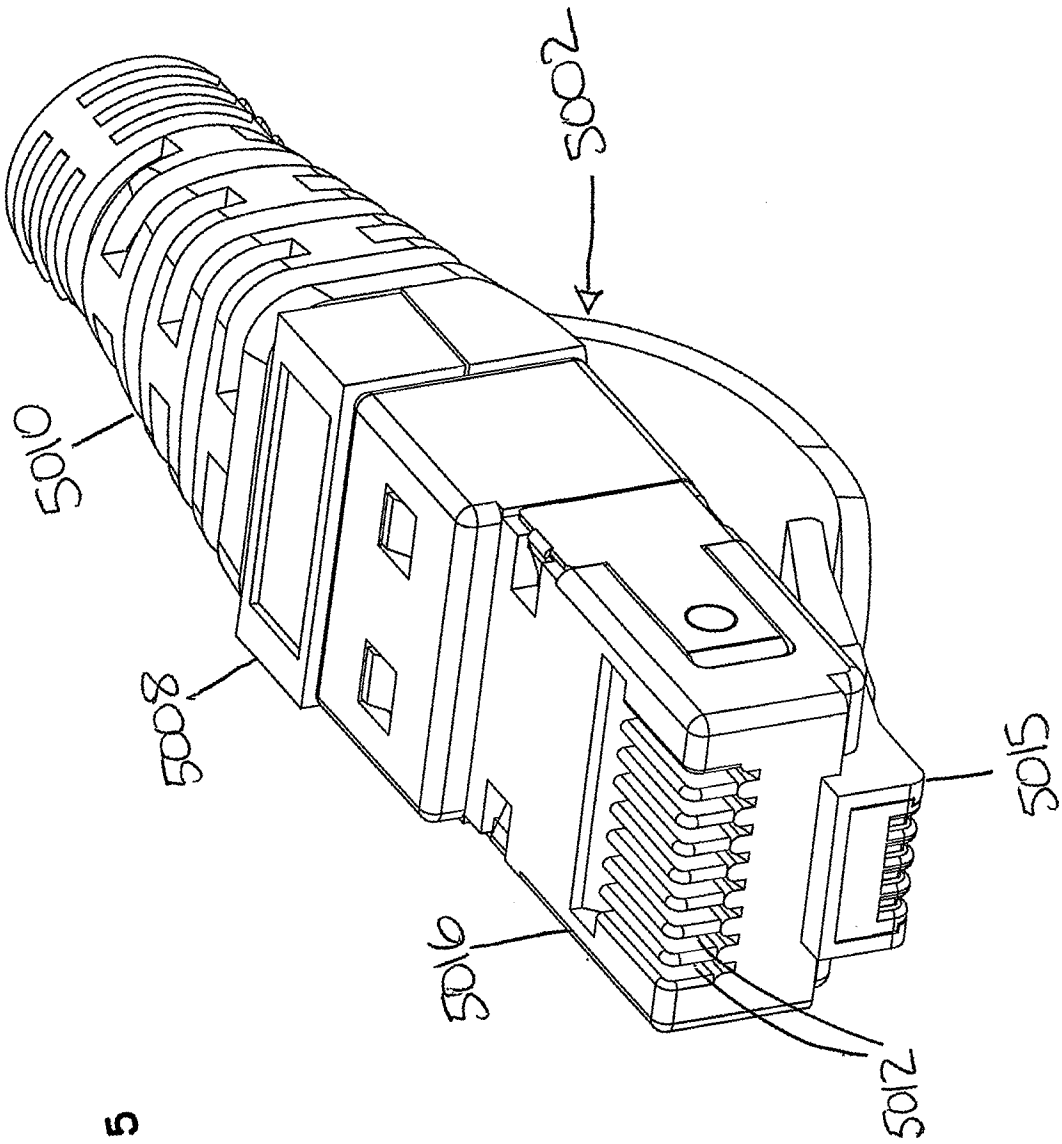

FIG. 5

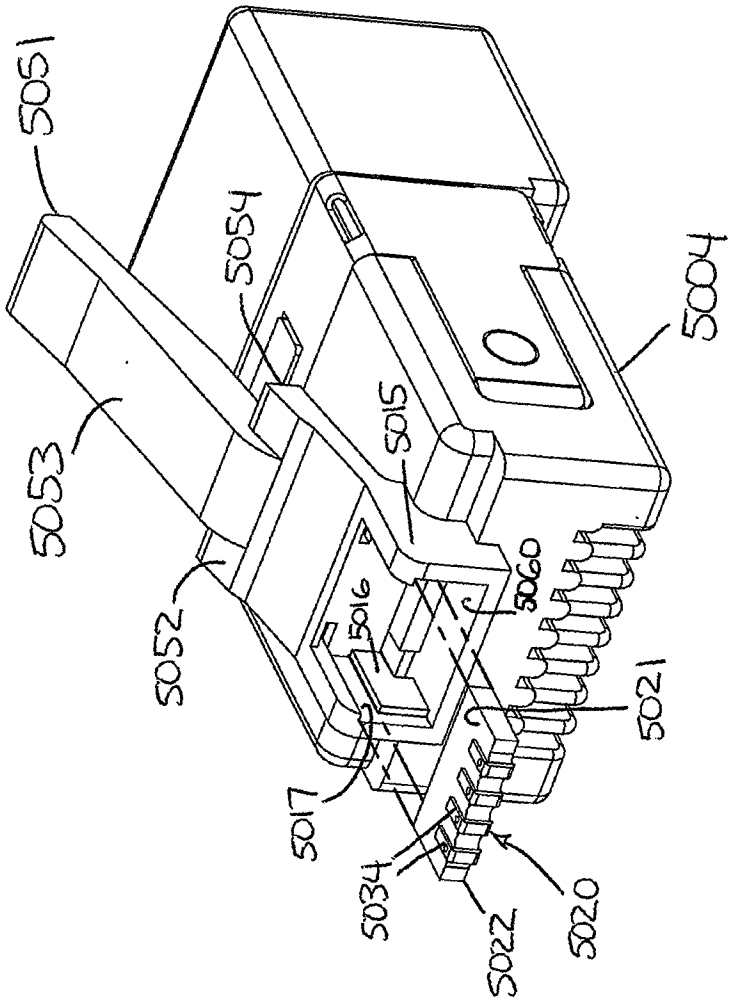
5051
5054
5004
5053
5015
5060
5016
5052
5021
5017
5034
5022
5020

FIG. 6

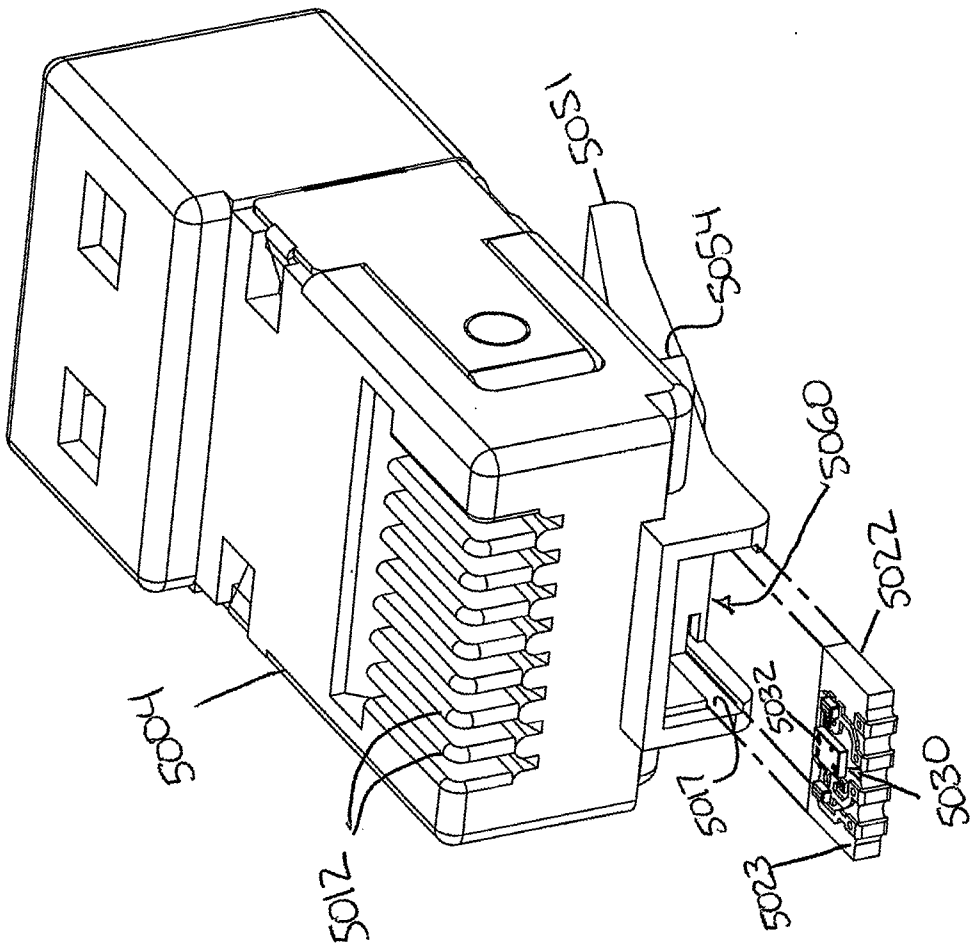

FIG. 7

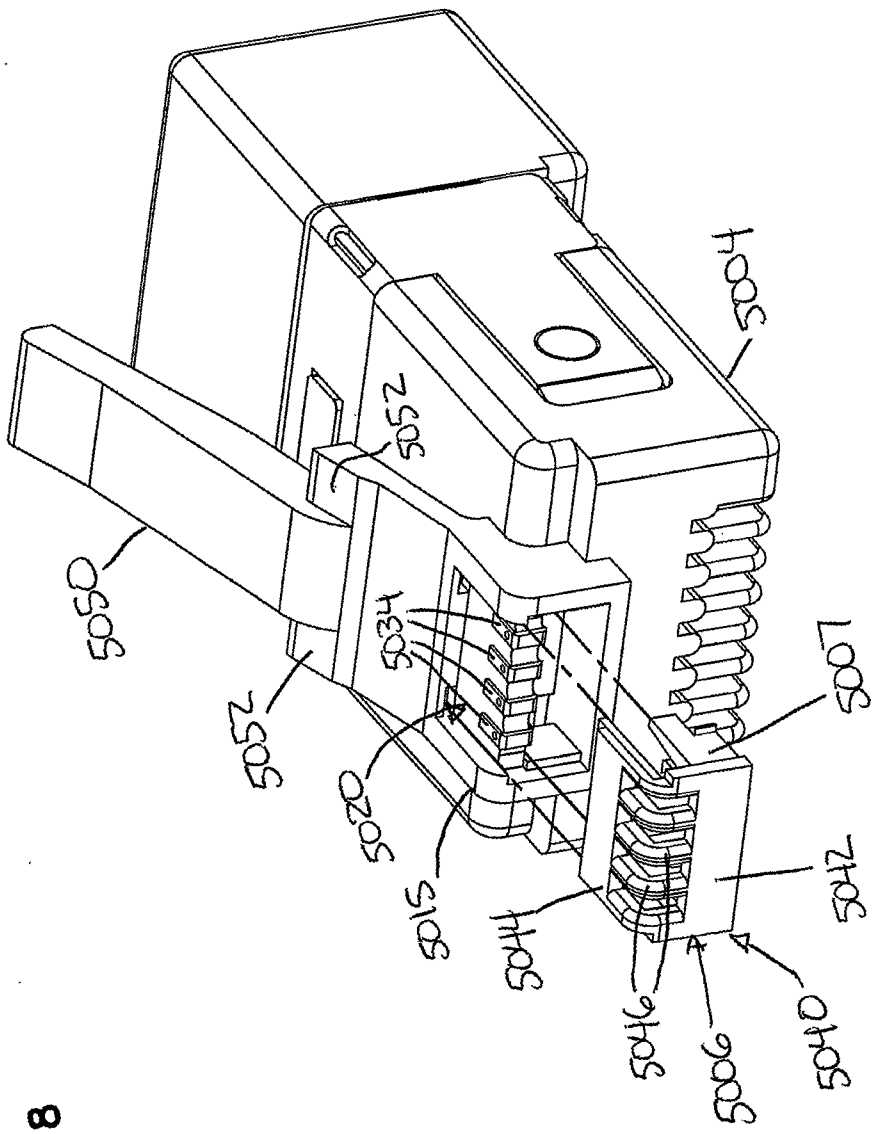

FIG. 8

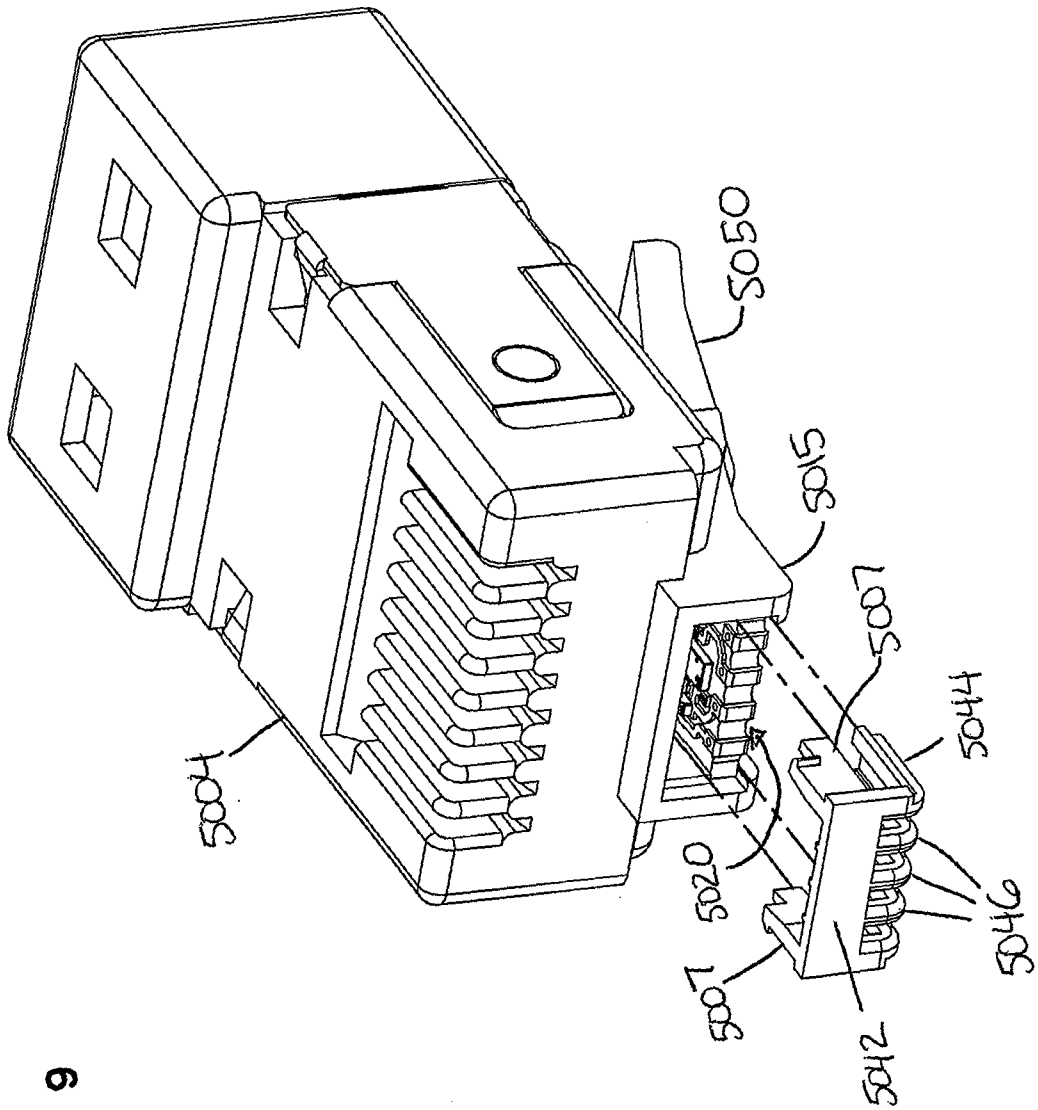

FIG. 9

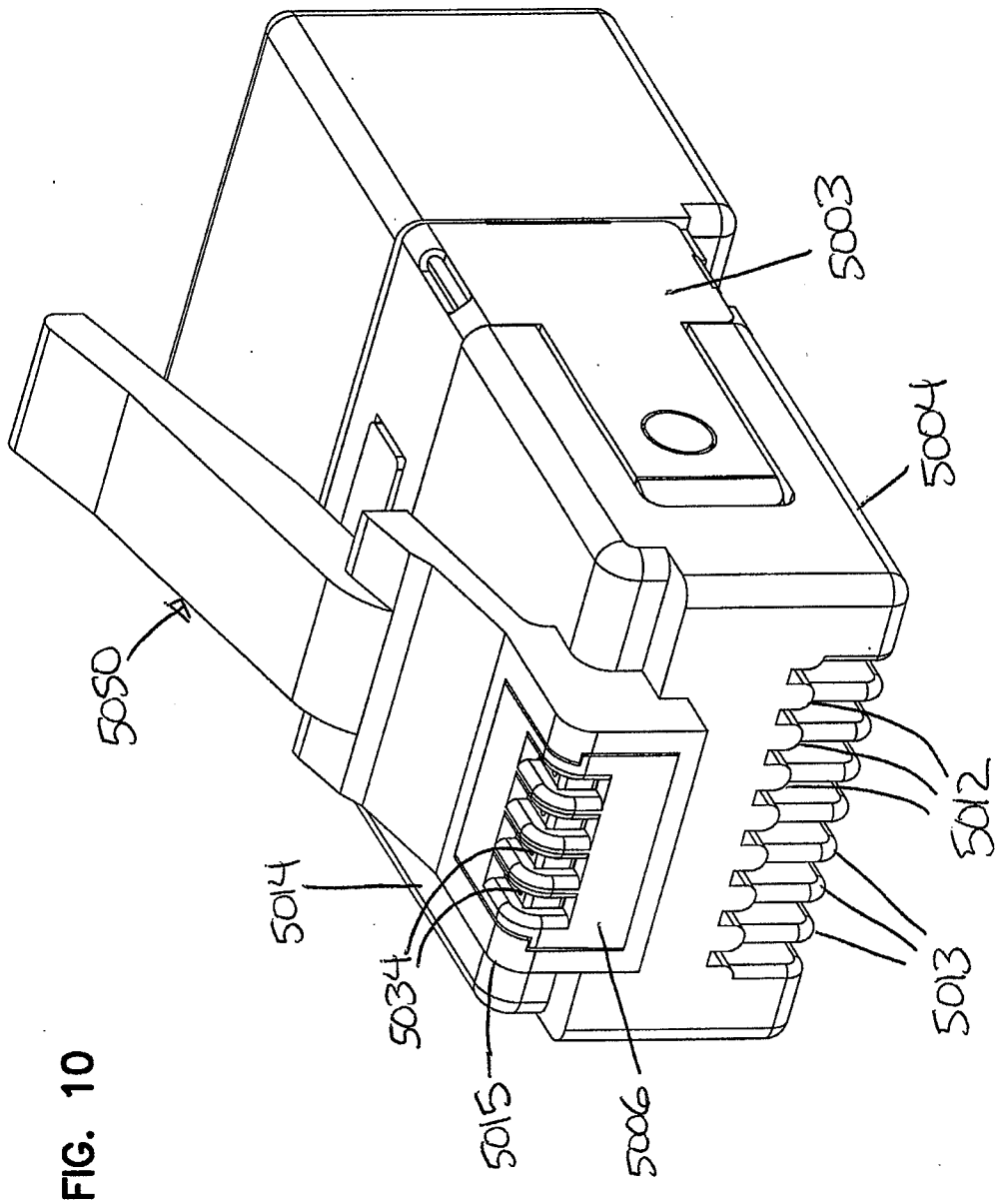

FIG. 10

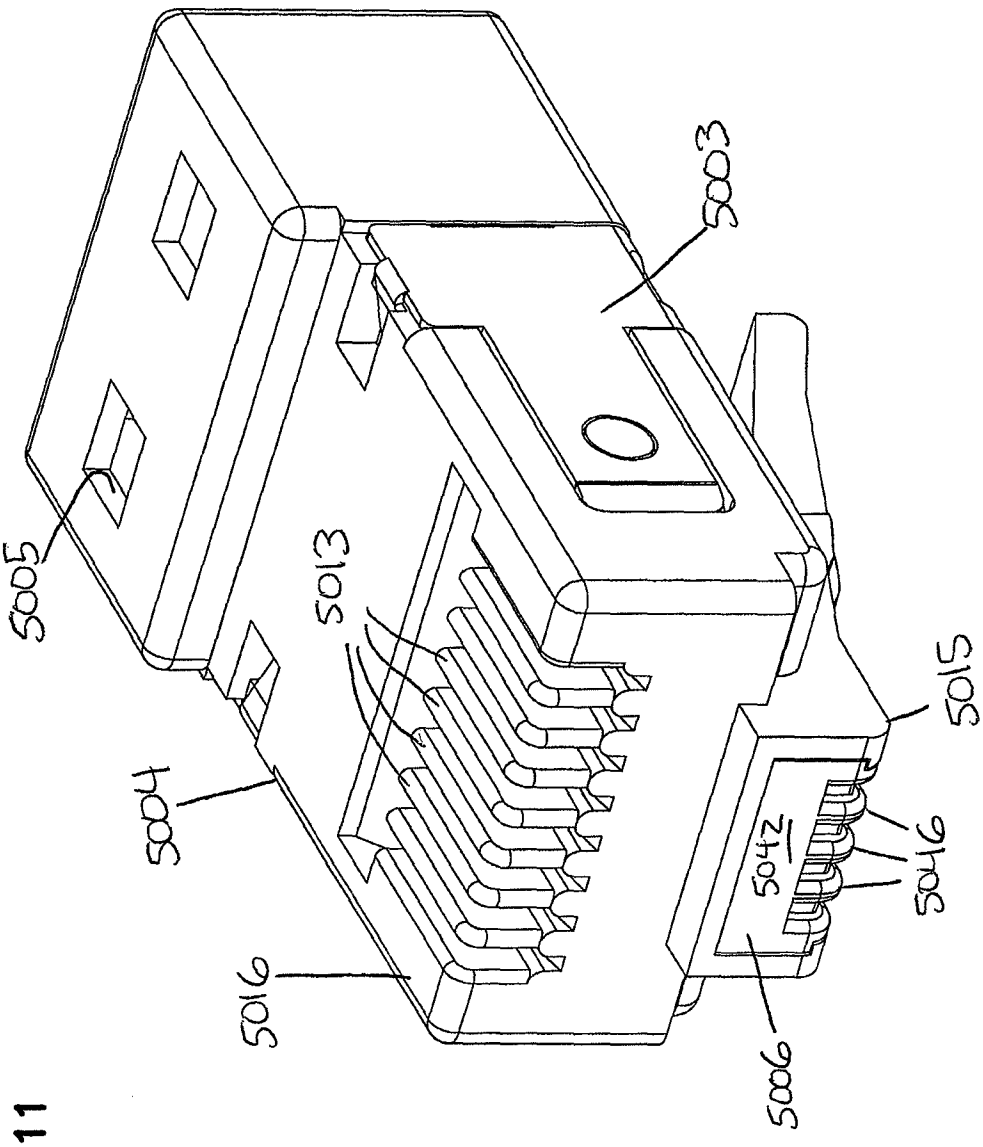

FIG. 11

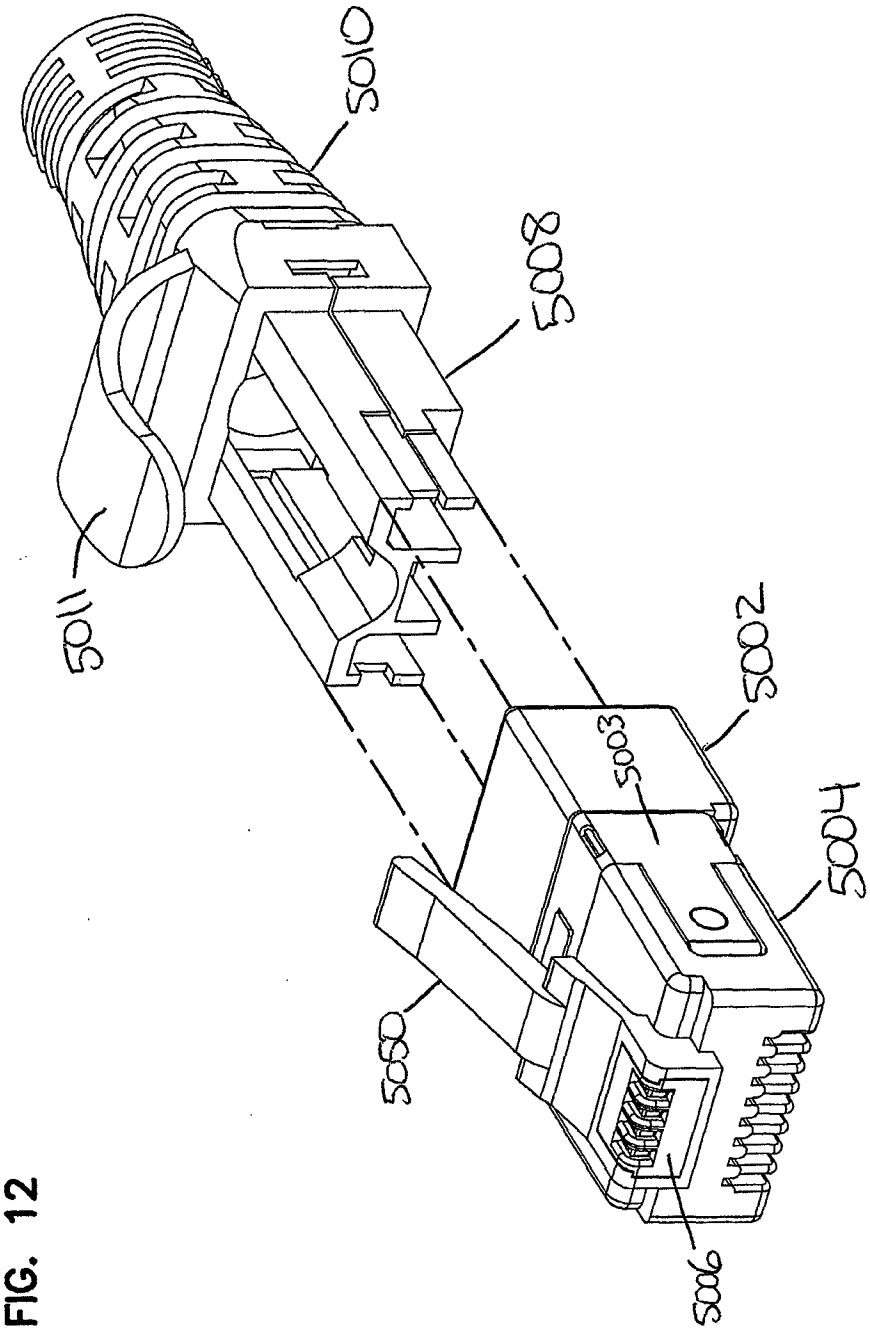

FIG. 12

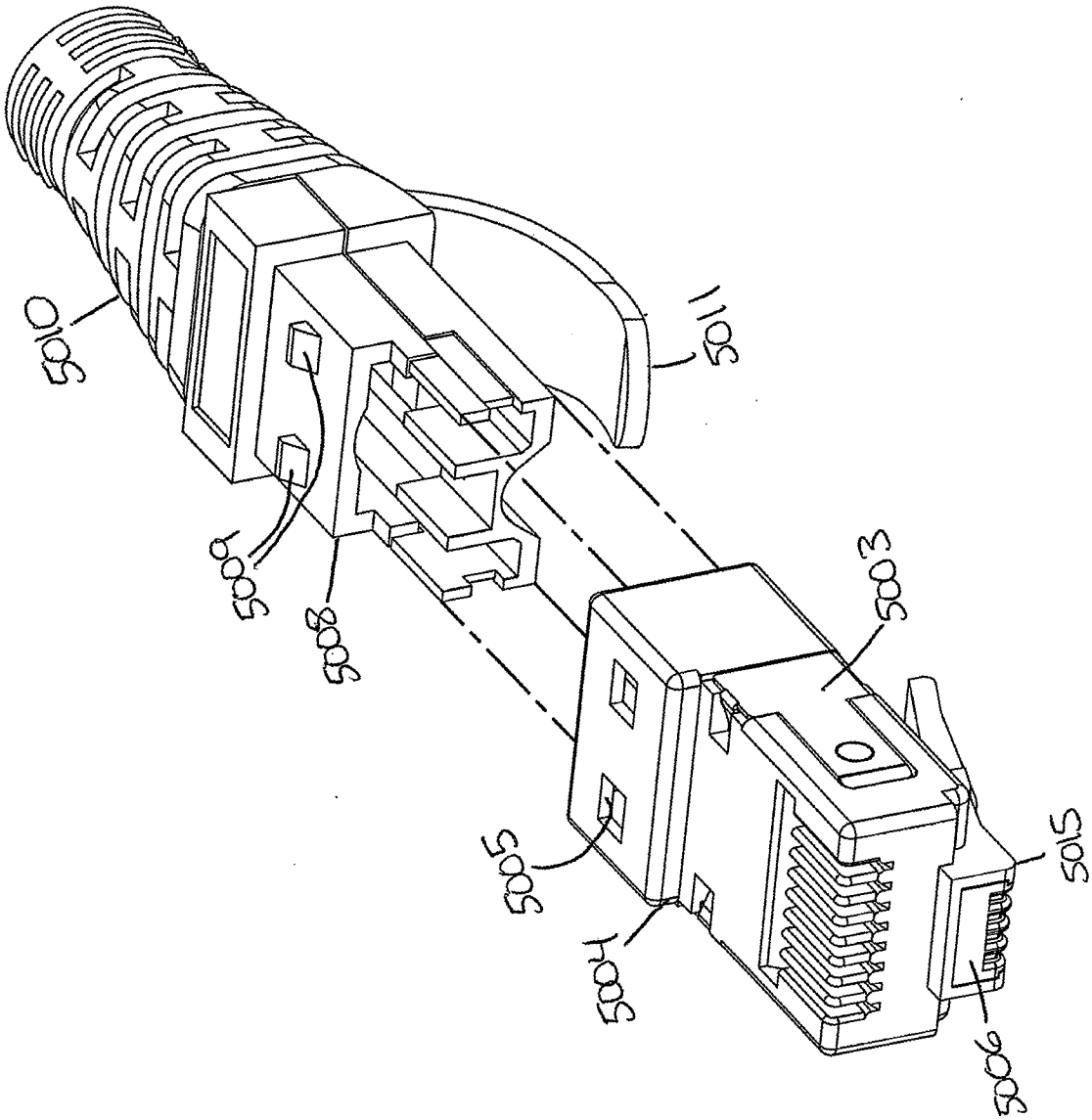

FIG. 13

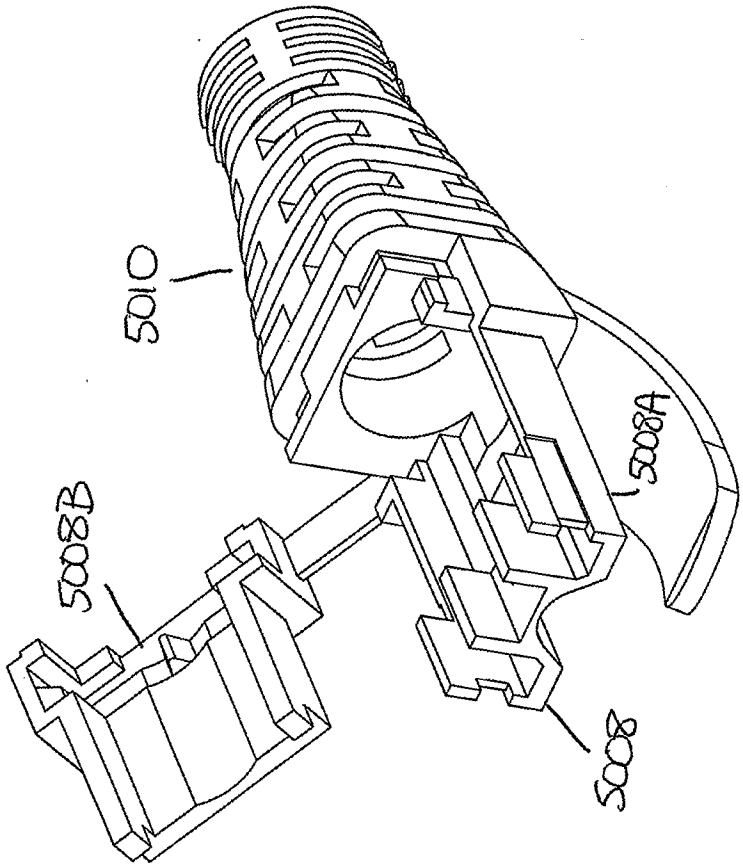

FIG. 14

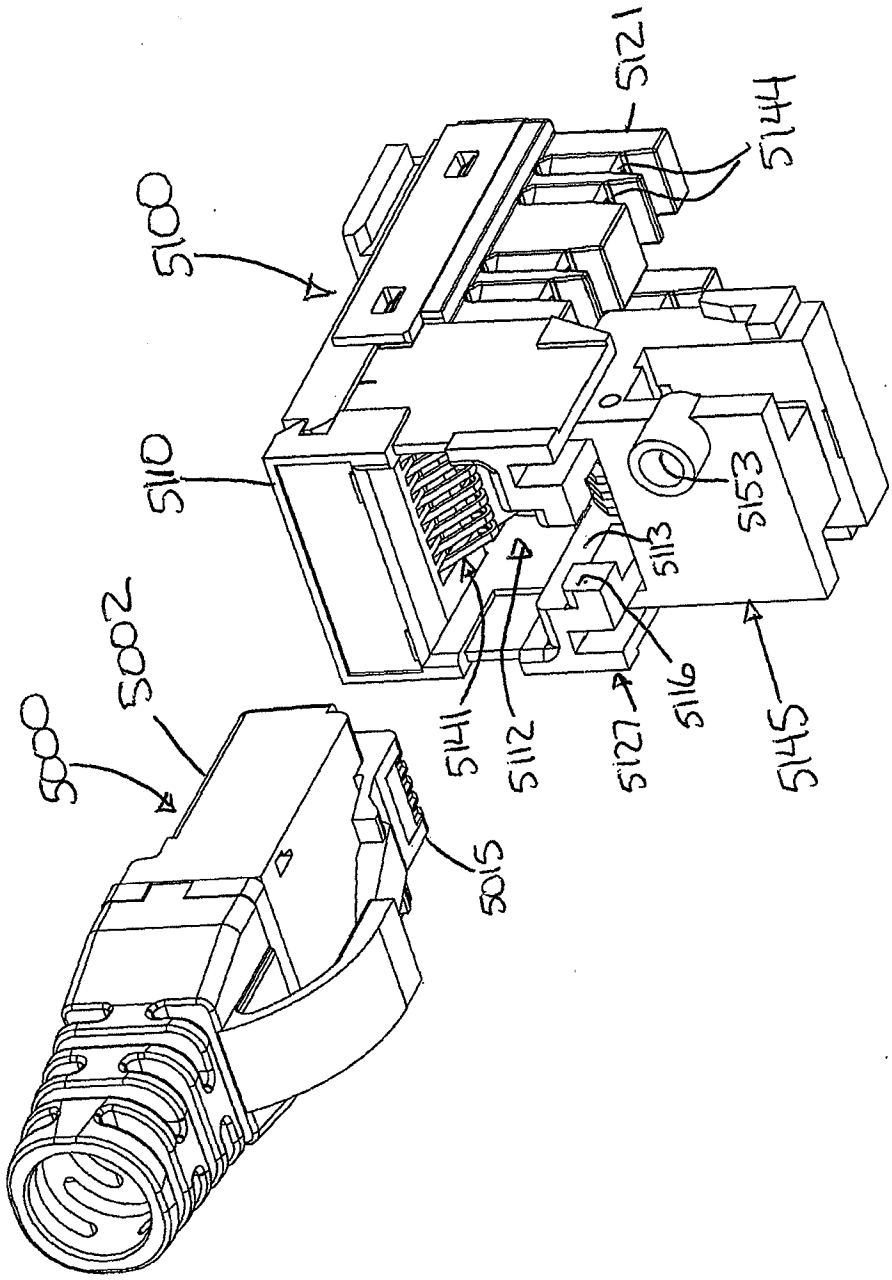
5100
5121
5144
5110
5153
5113
5116
5145
5127
5112
5141
5002
5000
5015

FIG. 15

FIG. 16

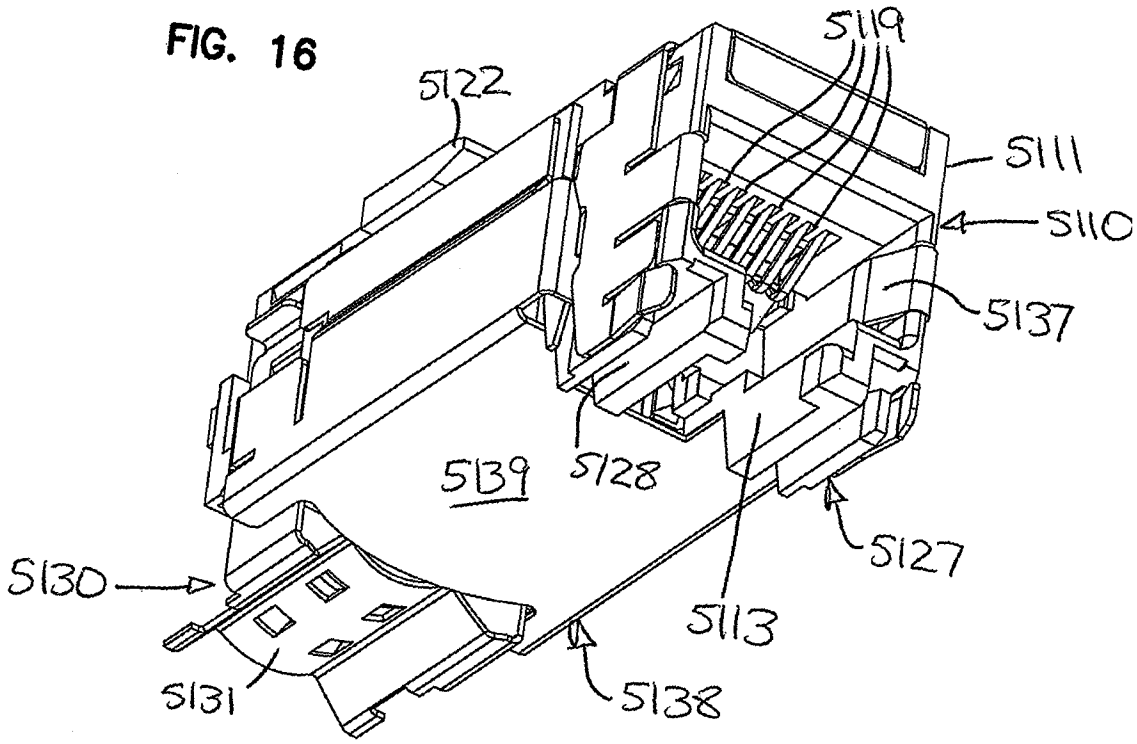
5119
5122
5111
5110
5137
5139
5128
5127
5130
5113
5131
5138

FIG. 17

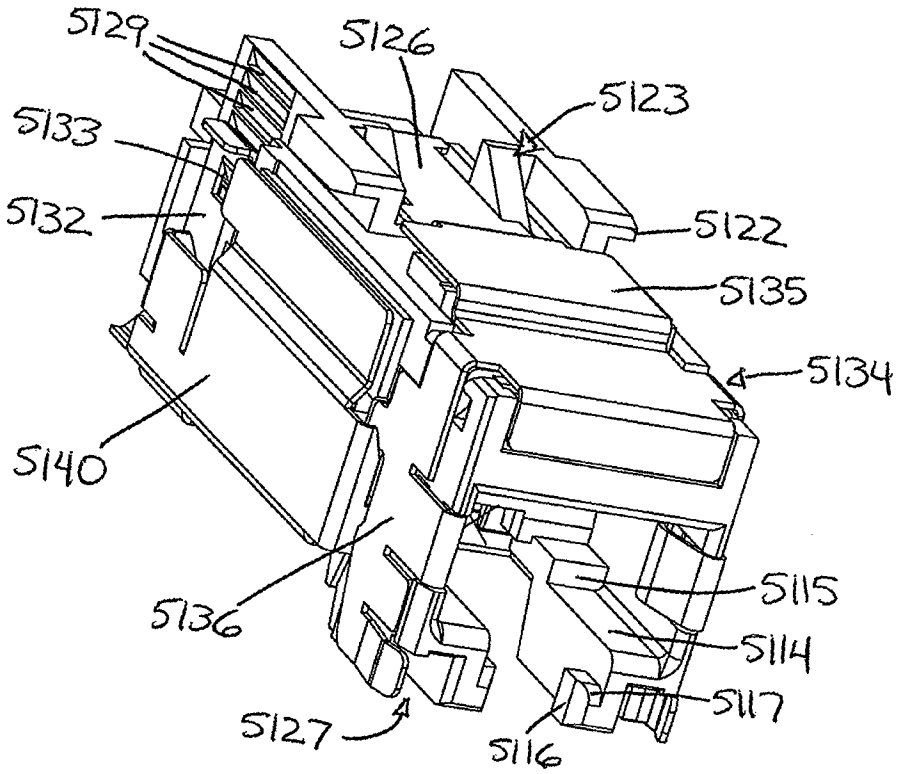
5129
5126
5123
5133
5132
5122
5135
5134
5140
5115
5136
5114
5117
5127
5116

FIG. 18

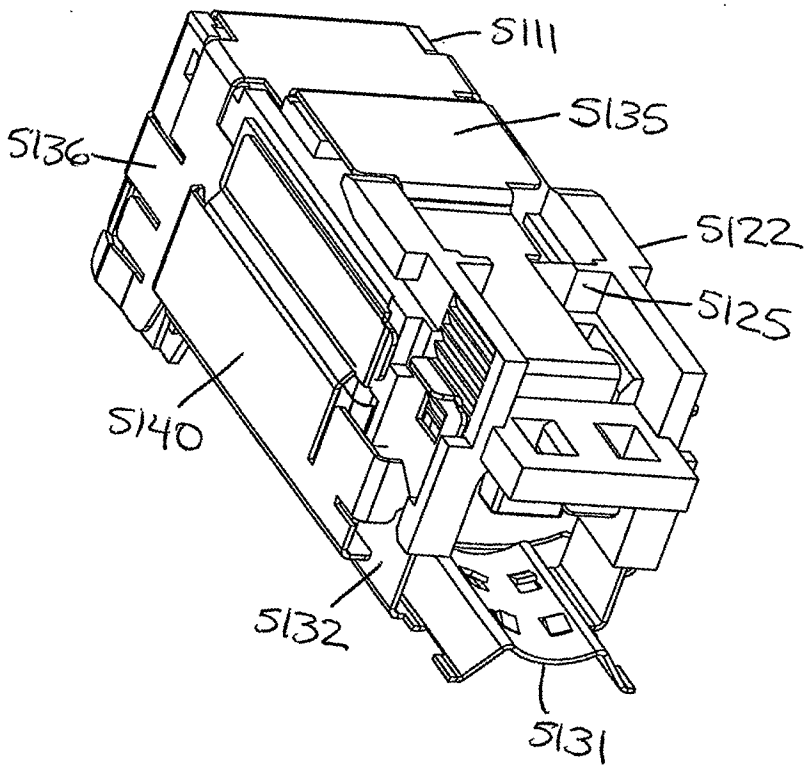
5111
5135
5136
5122
5125
5140
5132
5131

FIG. 19

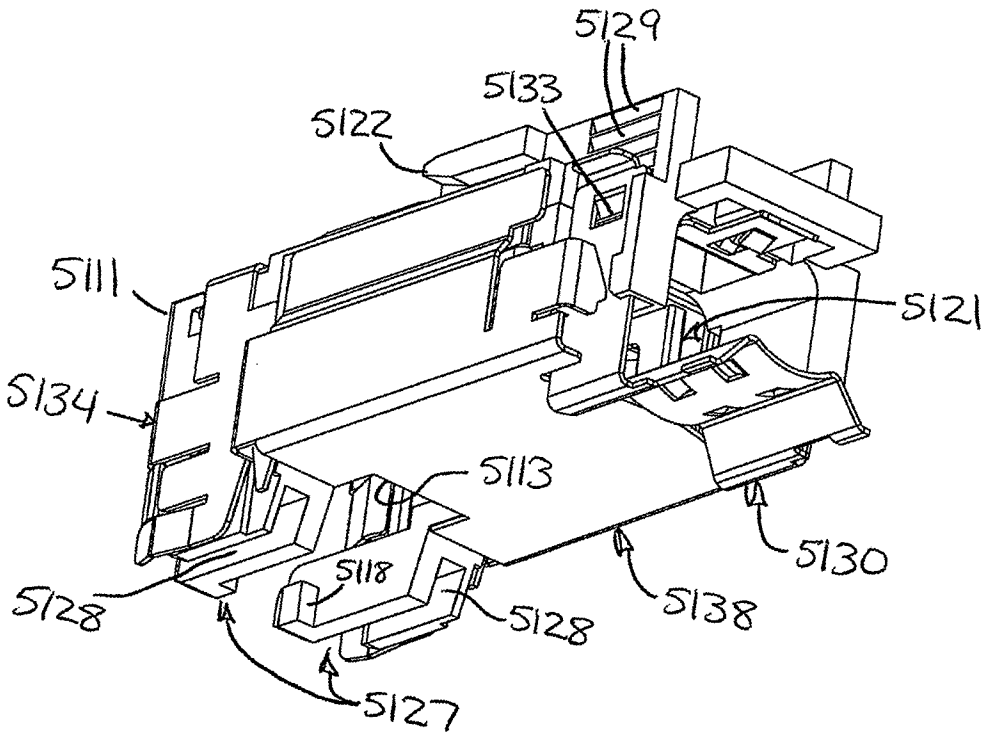
5129
5133
5122
5111
5121
5134
5113
5130
5118
5128
5128
5138
5127

FIG. 20

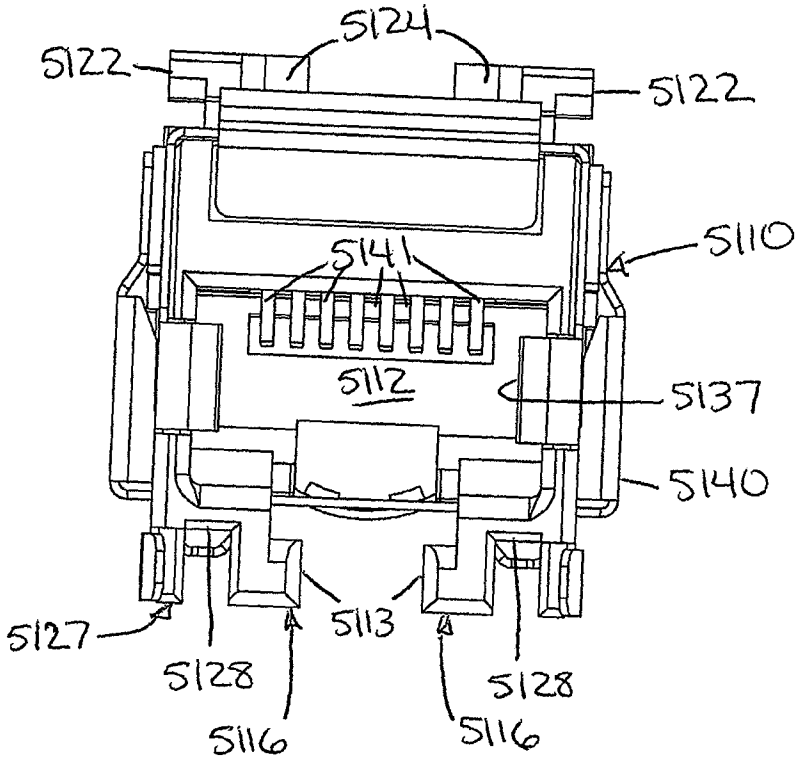
5124
5122
5122
5110
5141
5112
5137
5140
5127
5128
5113
5128
5116
5116

FIG. 21

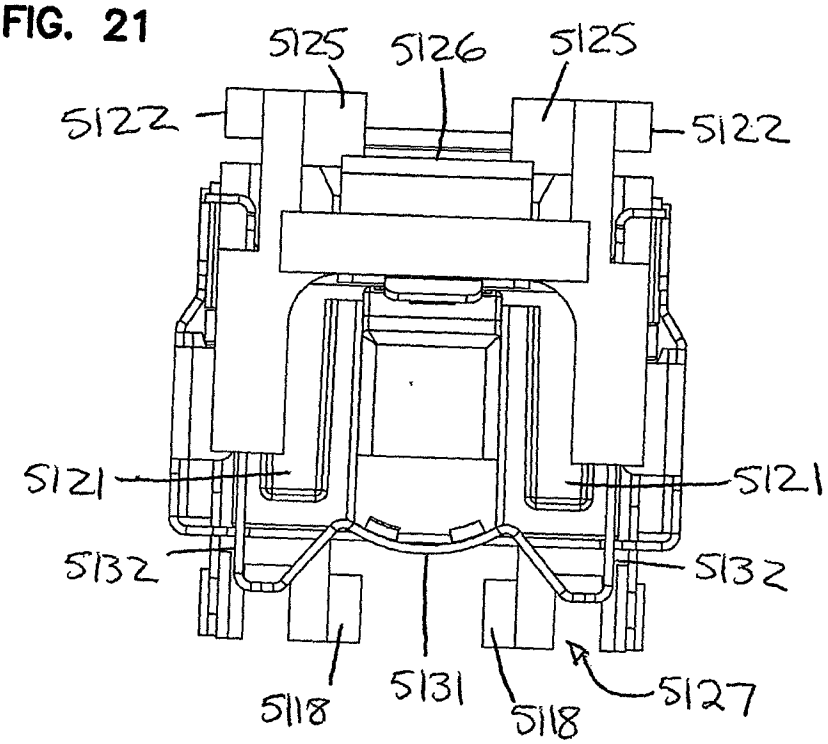
5125
5126
5125
5122
5122
5121
5121
5132
5132
5118
5131
5118
5127

FIG. 22

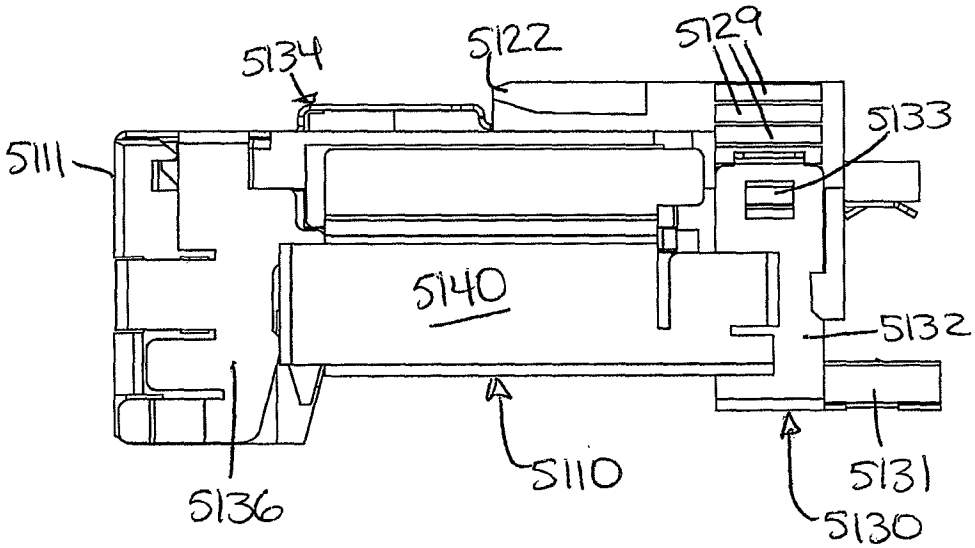
5134
5122
5129
5133
5111
5140
5132
5136
5110
5131
5130

FIG. 23

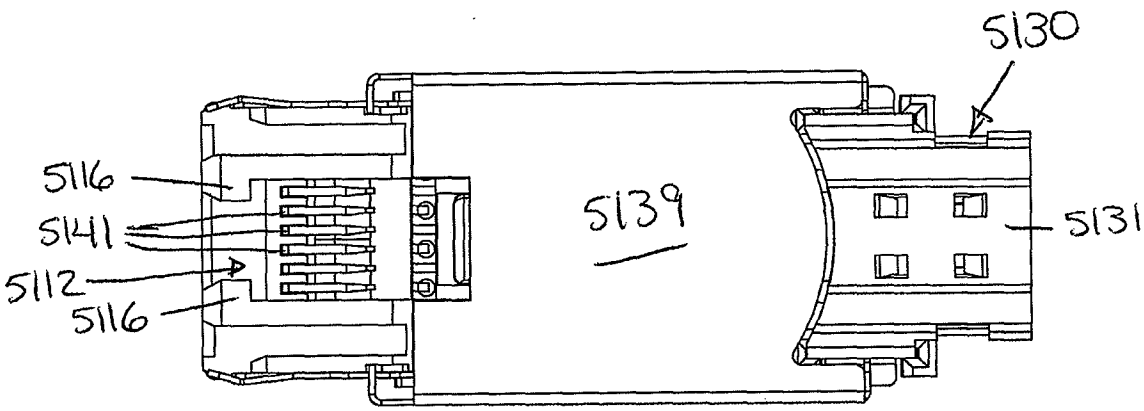
5130
5116
5141
5112
5116
5139
5131

FIG. 24

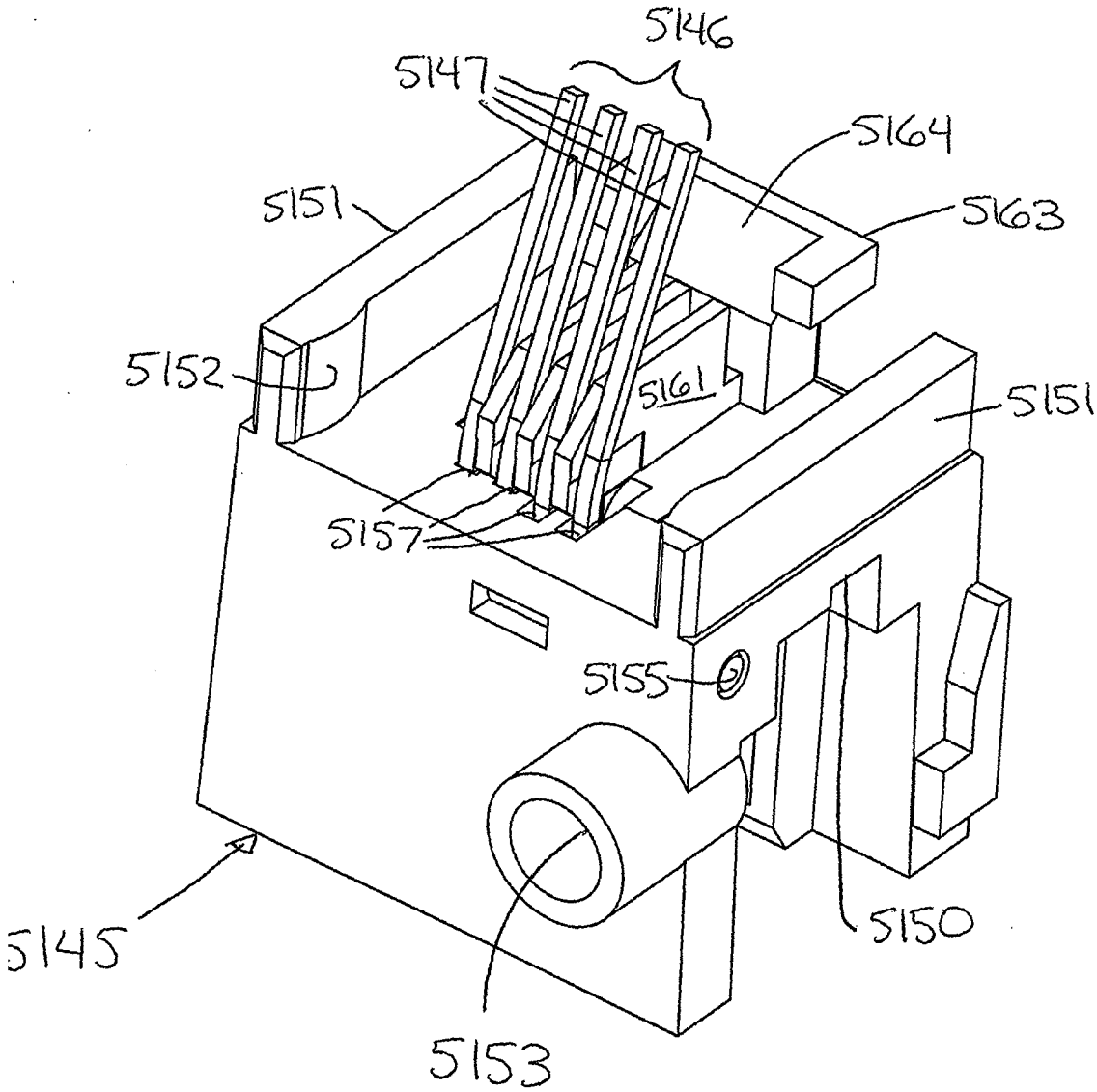
5146
5147
5164
5151
5163
5152
5161
5151
5157
5155
5145
5150
5153

FIG. 25

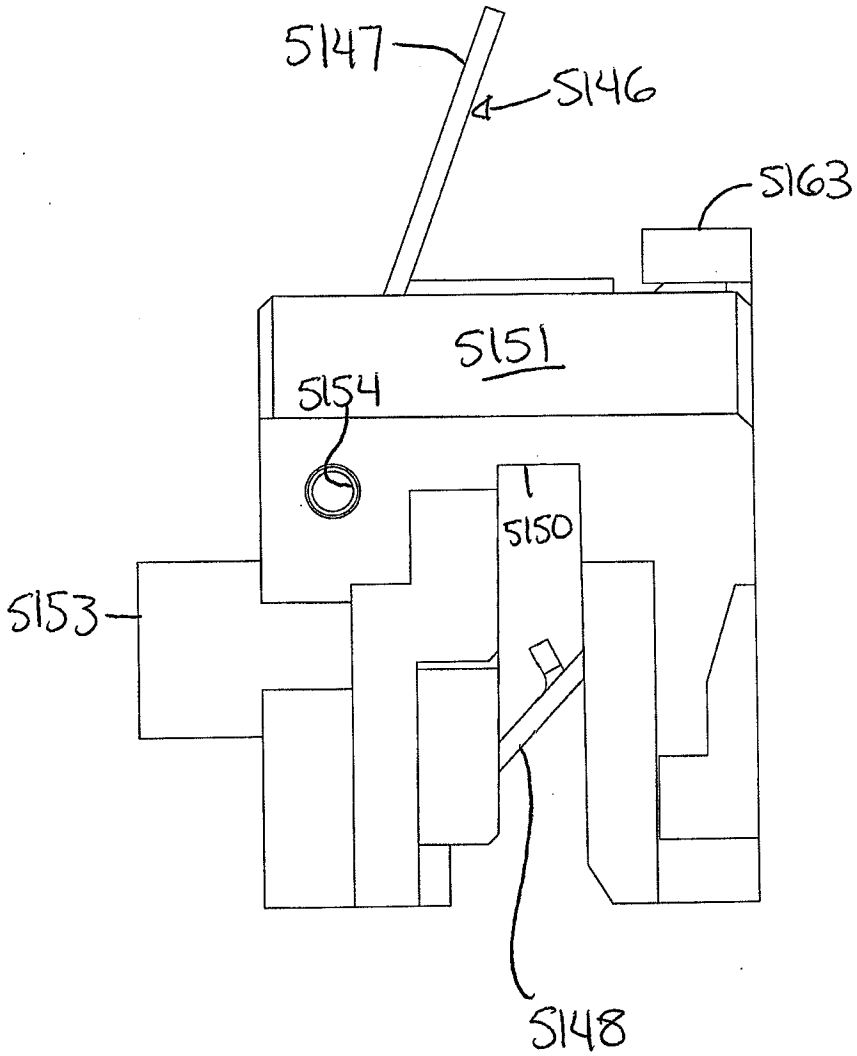

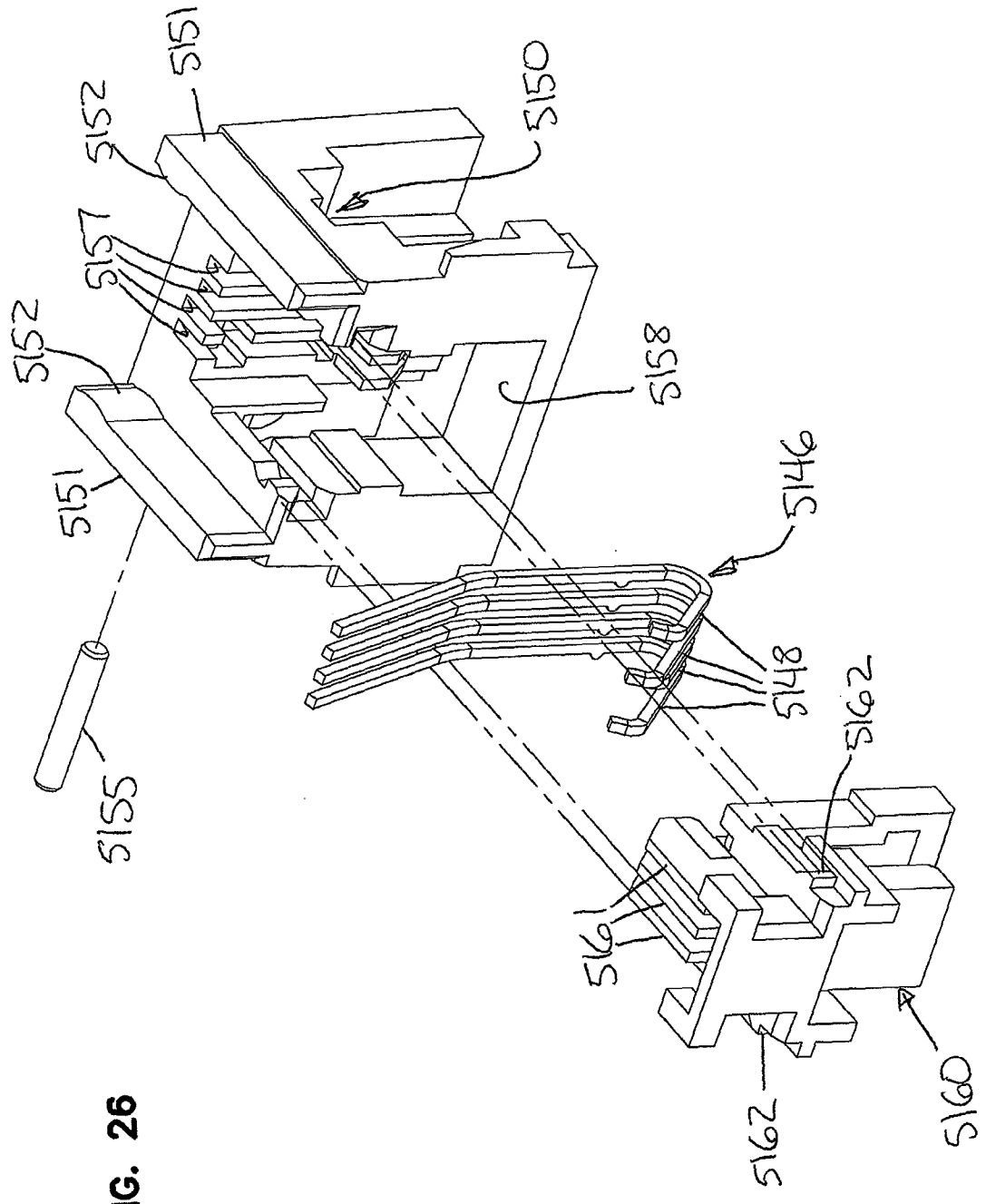
5151
5150
5152
5157
5152
5158
5151
5146
5148
5162
5155
5164
5162
5160

FIG. 26

FIG. 27

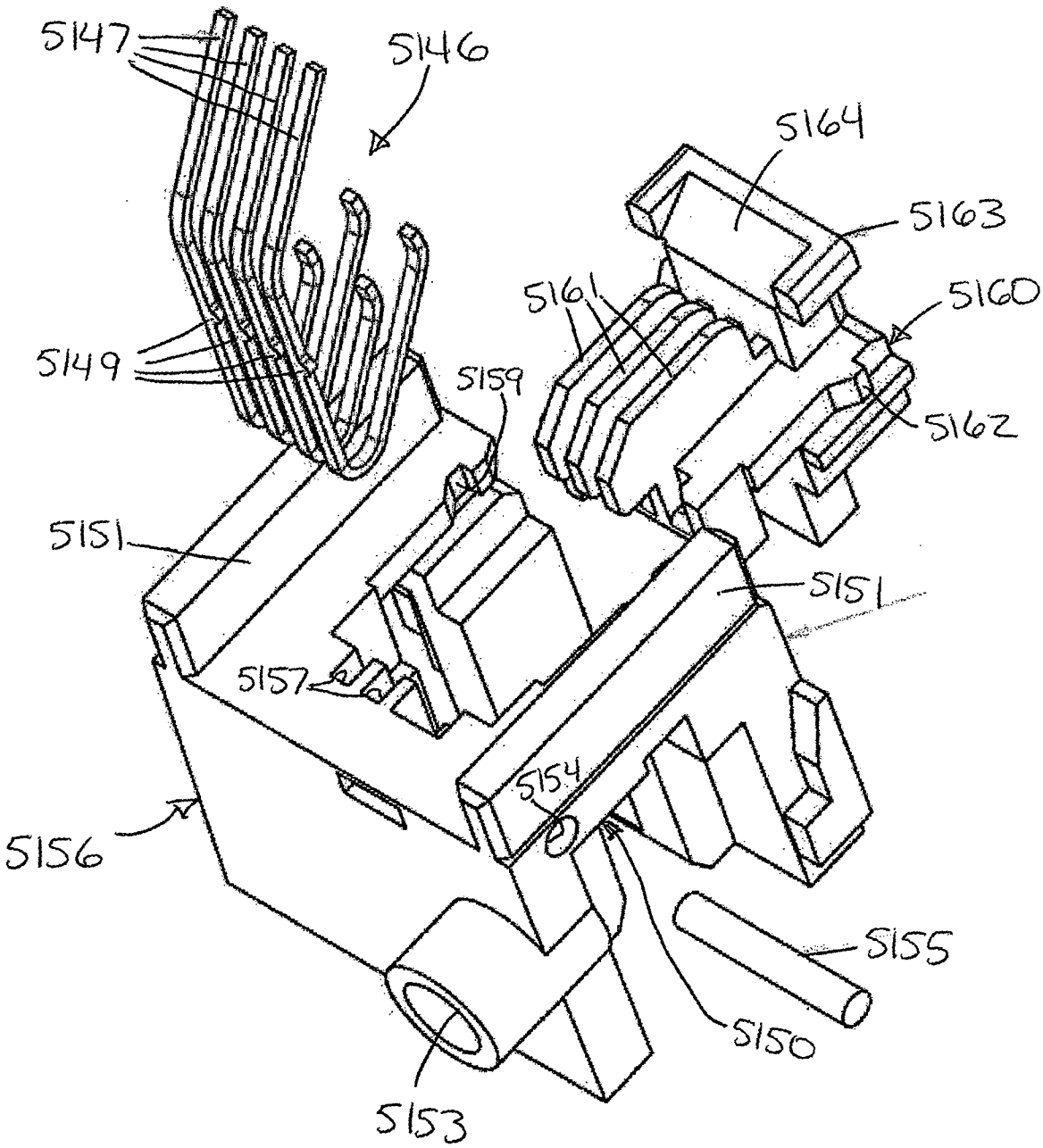
5147
5146
5164
5163
5161
5160
5149
5159
5162
5151
5151
5157
5154
5156
5155
5150
5153

FIG. 28

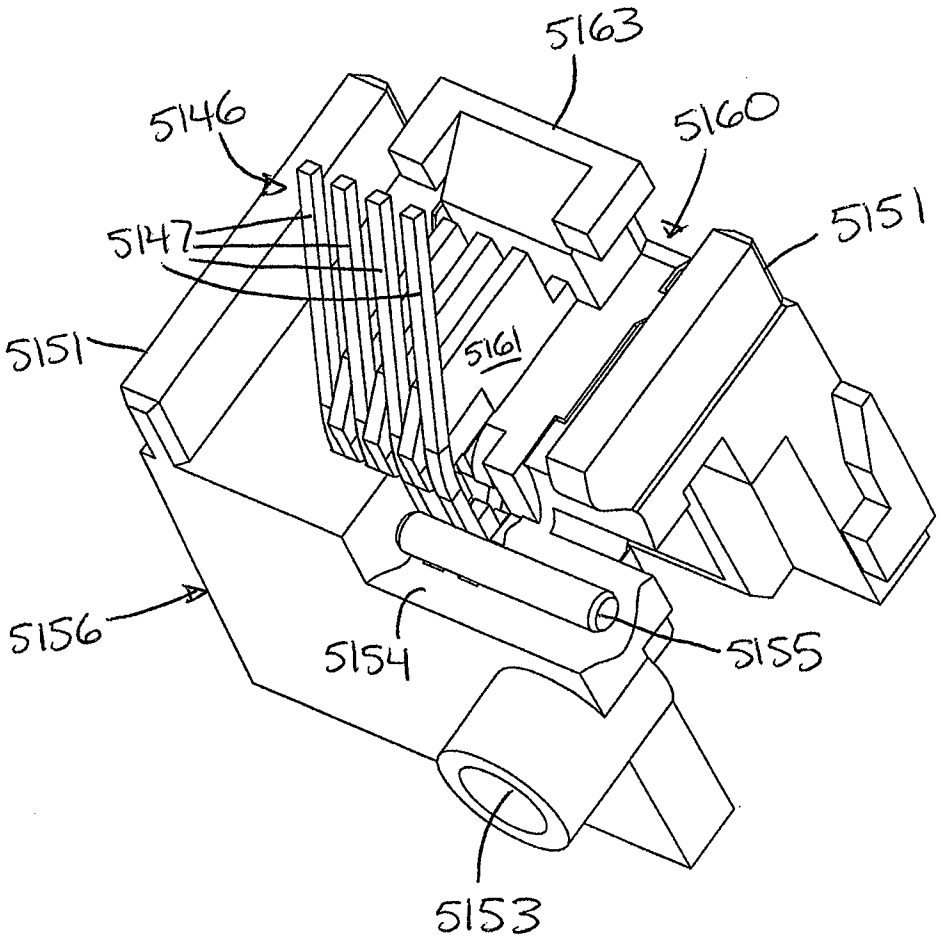

FIG. 29

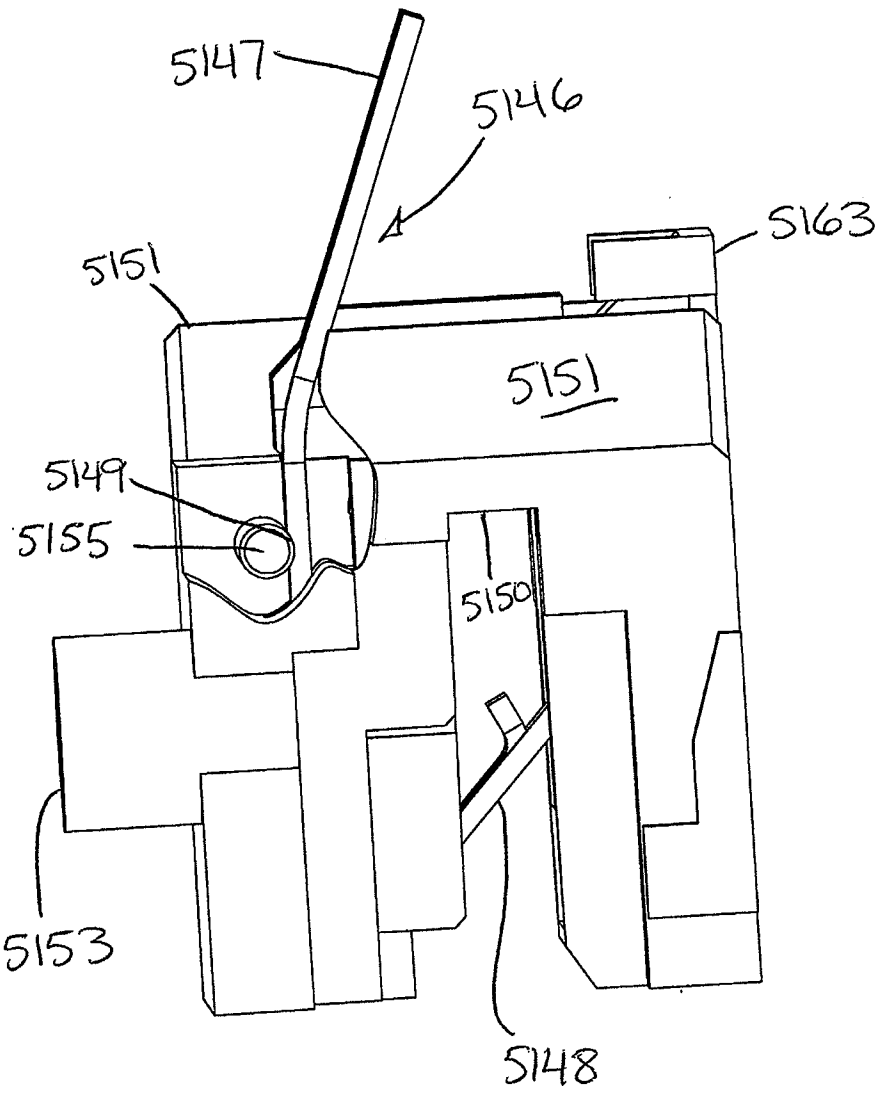

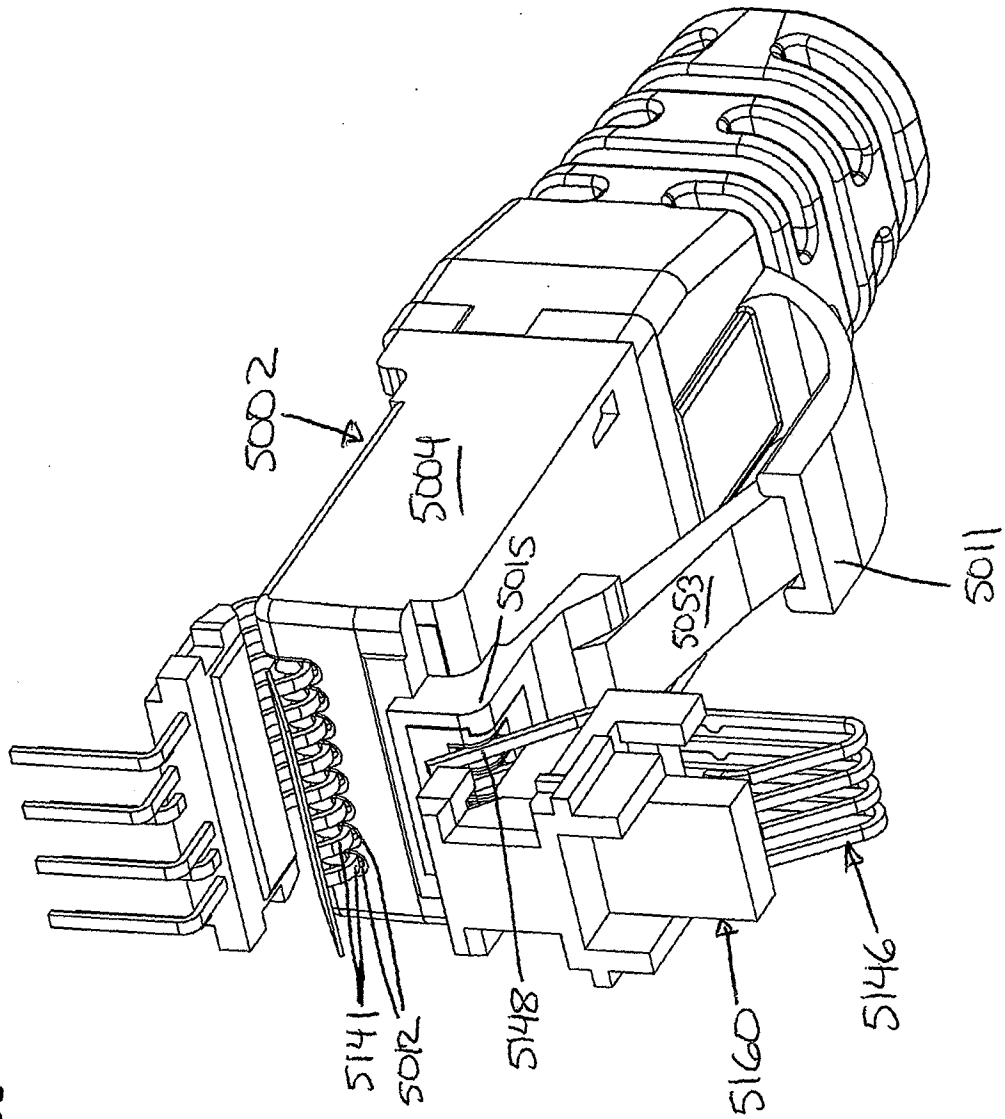

FIG. 30

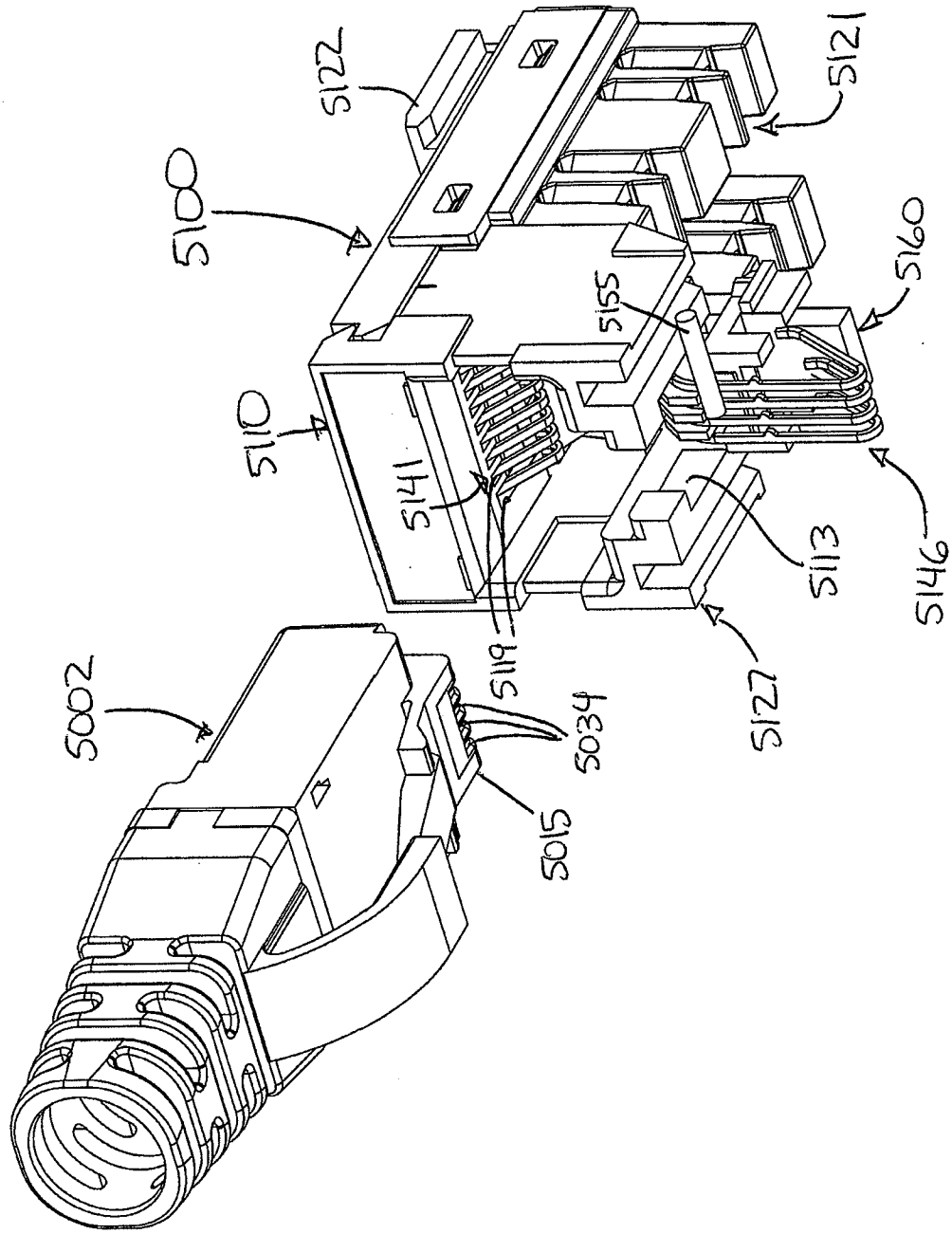
5122
5121
5100
5160
5155
5110
5141
5113
5146
5119
5127
5002
5034
5015

FIG. 31

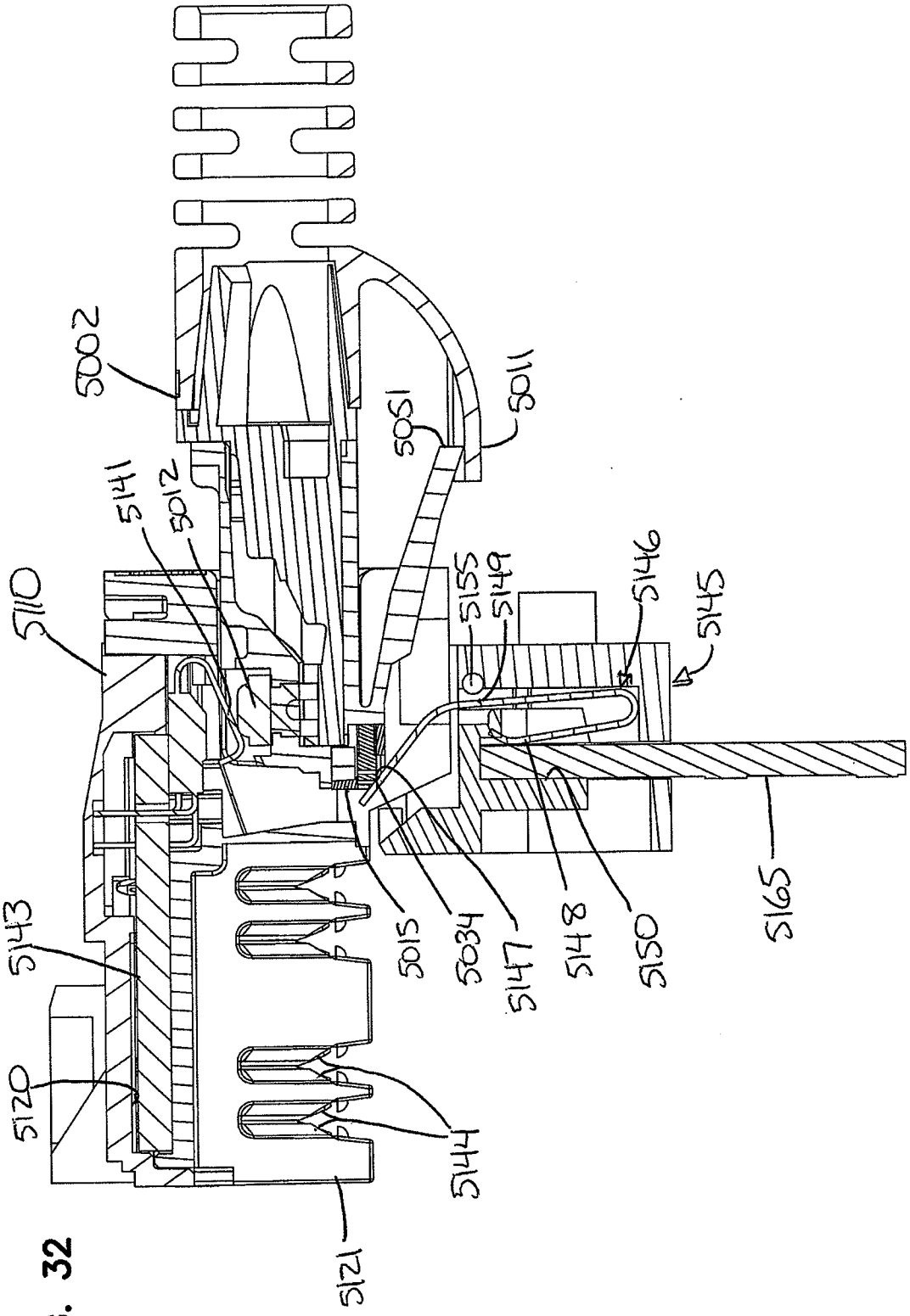
5002
5051
5011
5141
5012
5110
5155
5149
5146
5145
5143
5120
5144
5121
5015
5034
5147
5148
5150
5165

FIG. 32

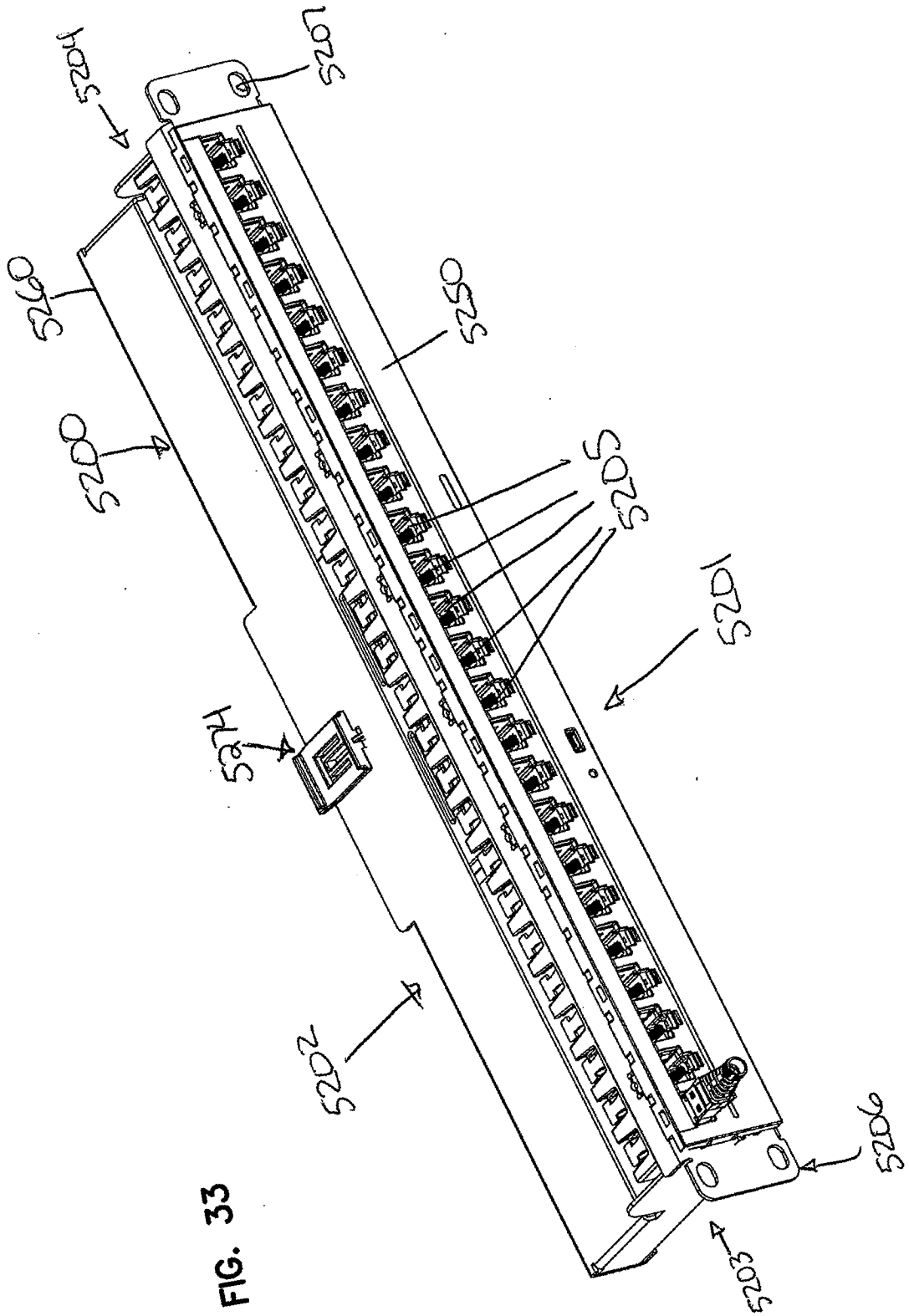

FIG. 33

FIG. 34

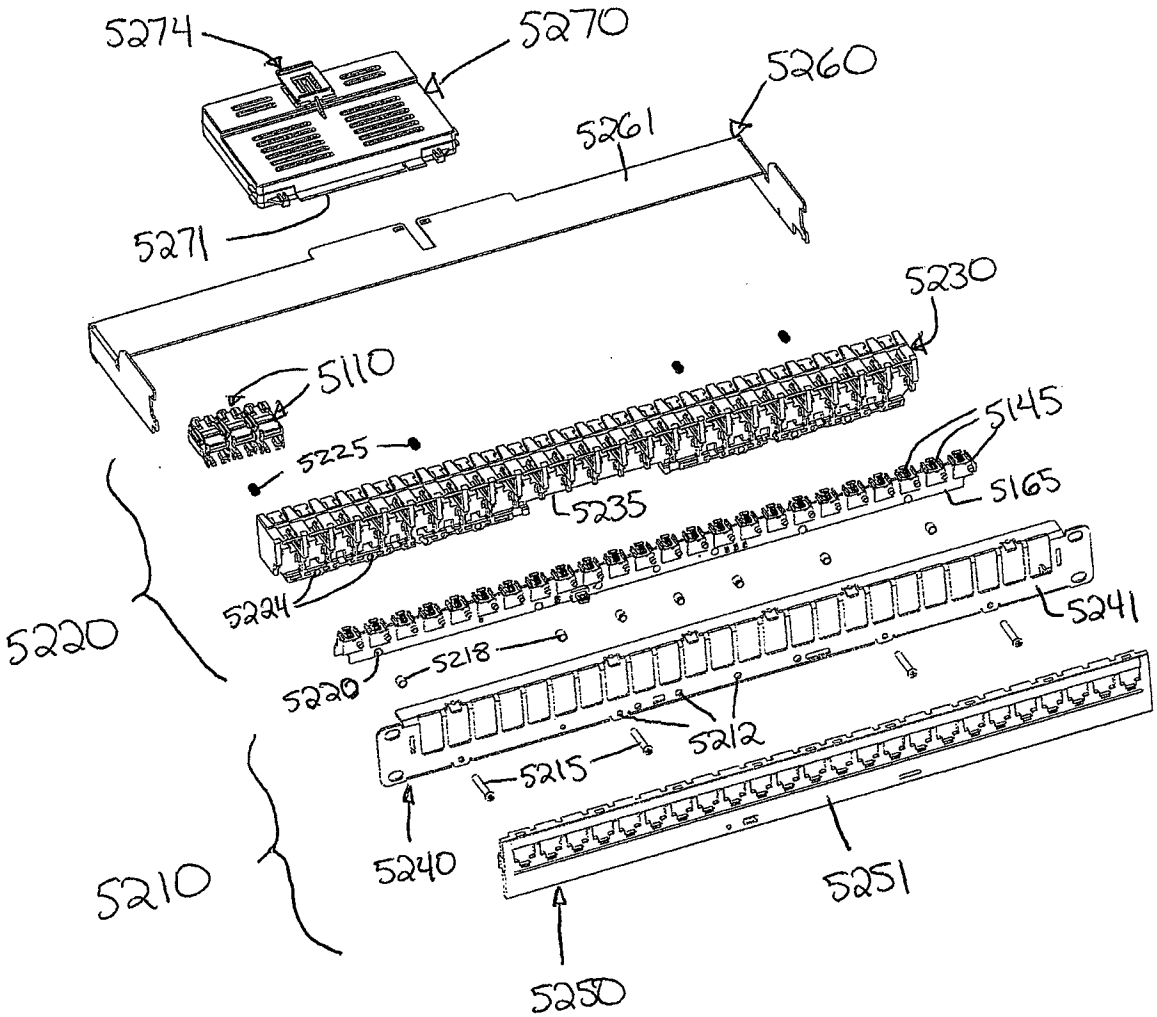
5274
5270
5260
5261
5271
5230
5110
5225
5145
5165
5235
5224
5241
5220
5218
5220
5212
5215
5240
5251
5210
5250

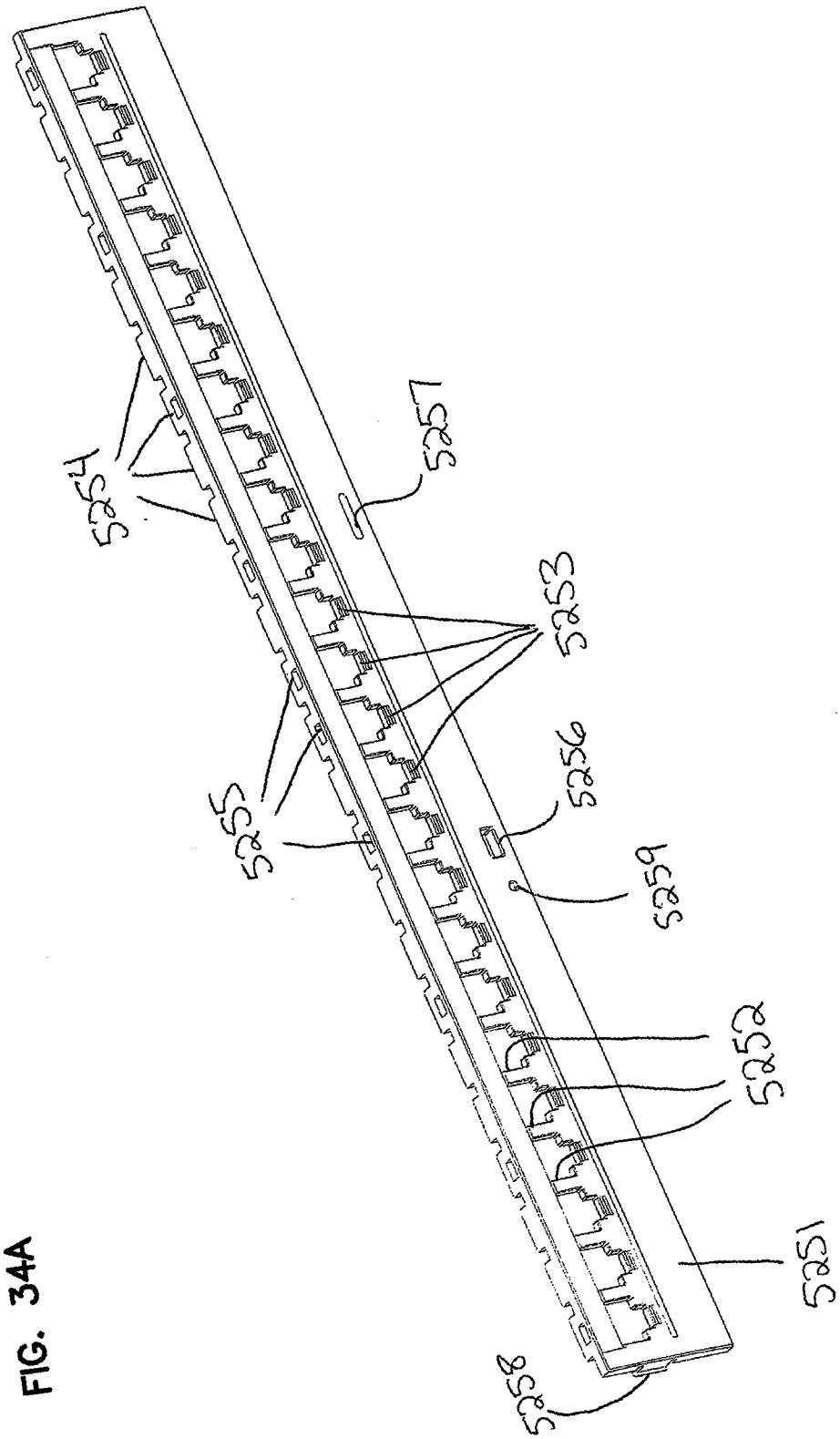

FIG. 34A

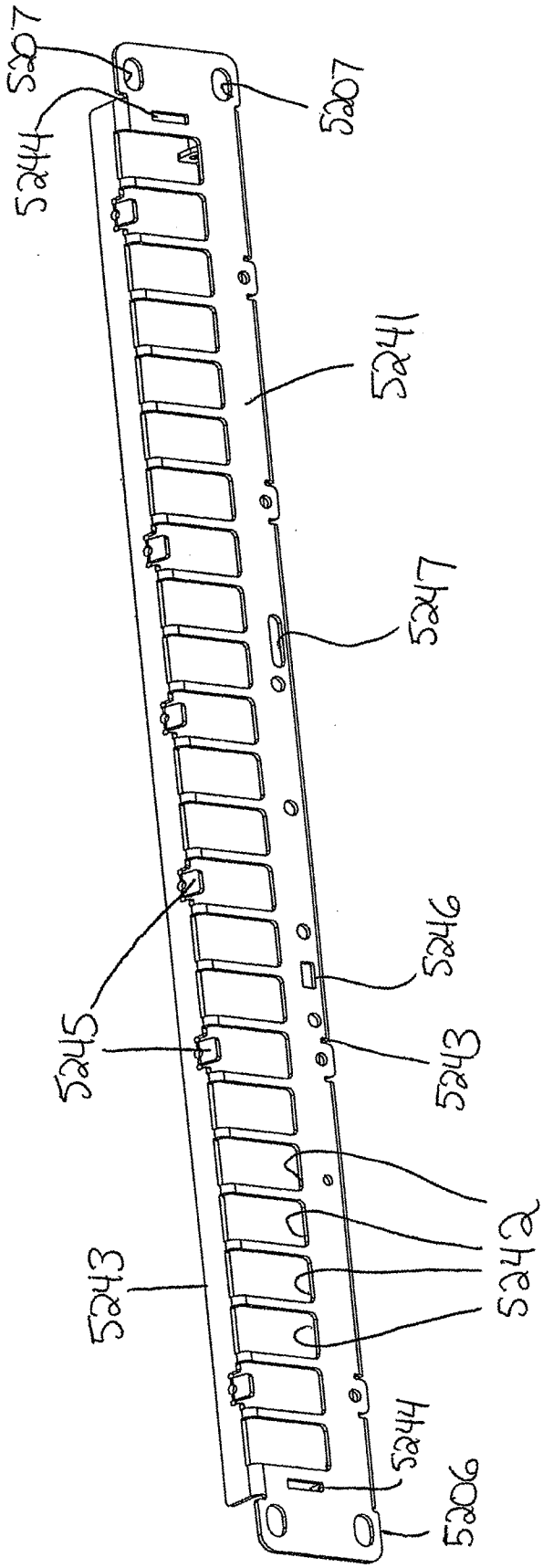

FIG. 34B

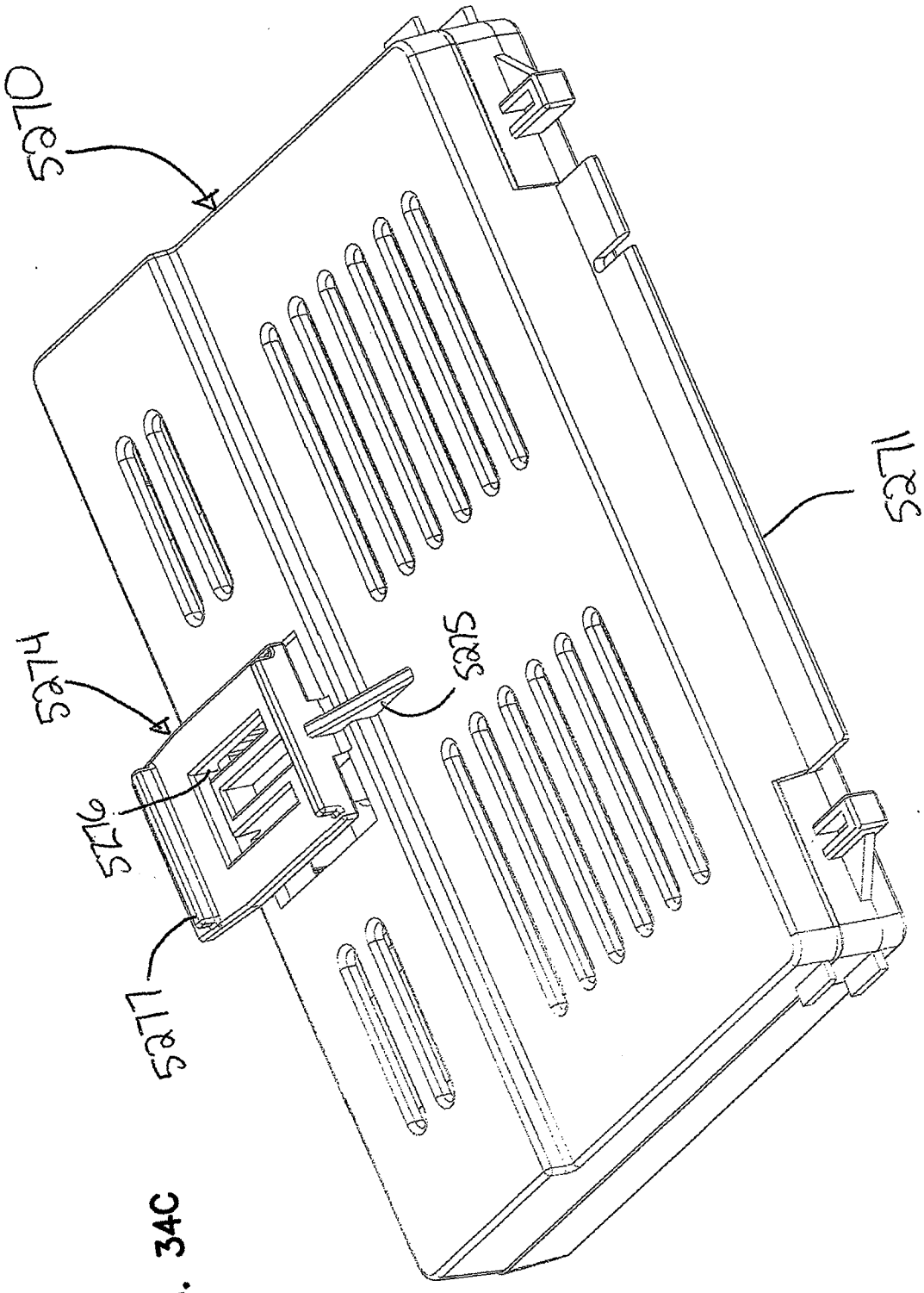

FIG. 34C

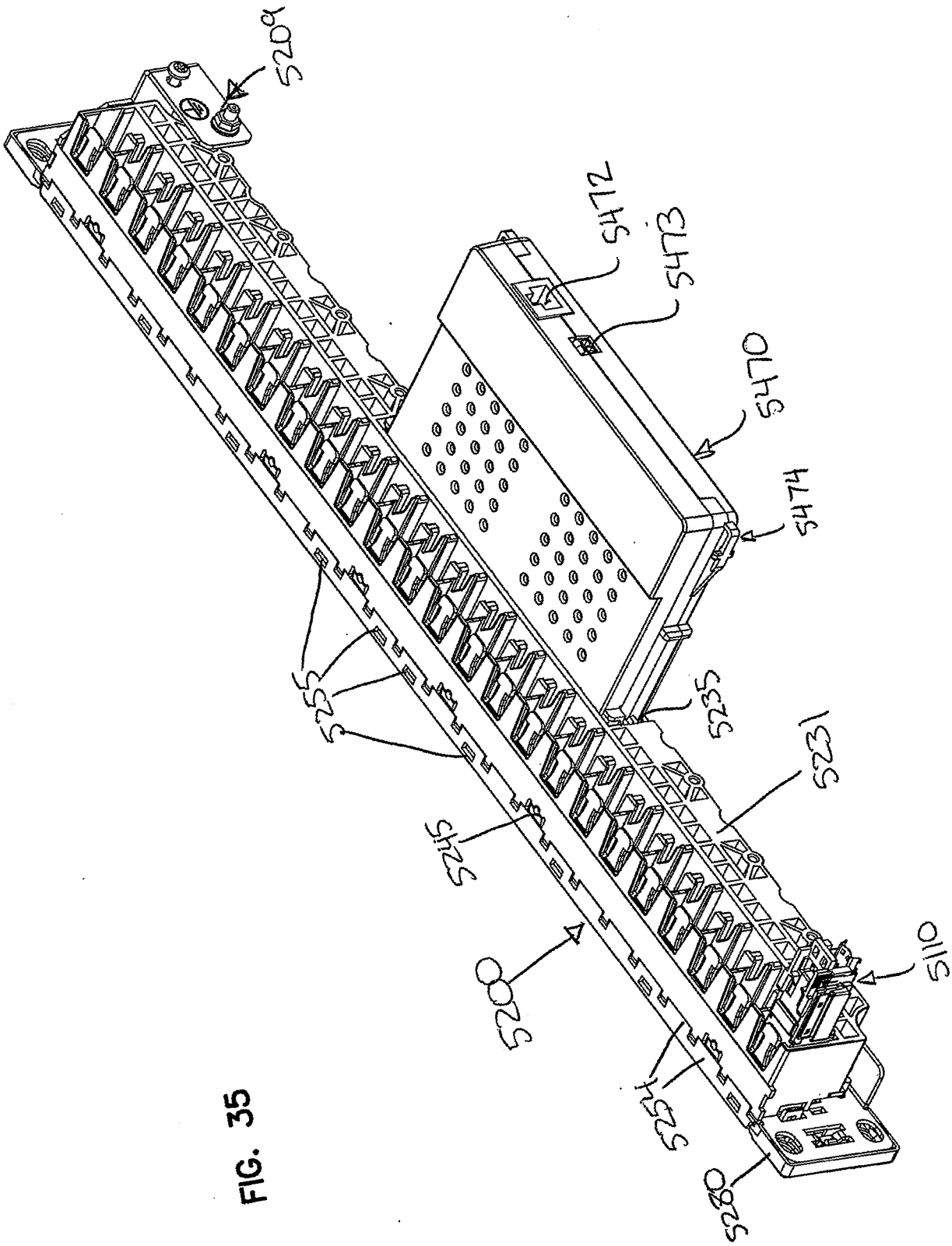

FIG. 35

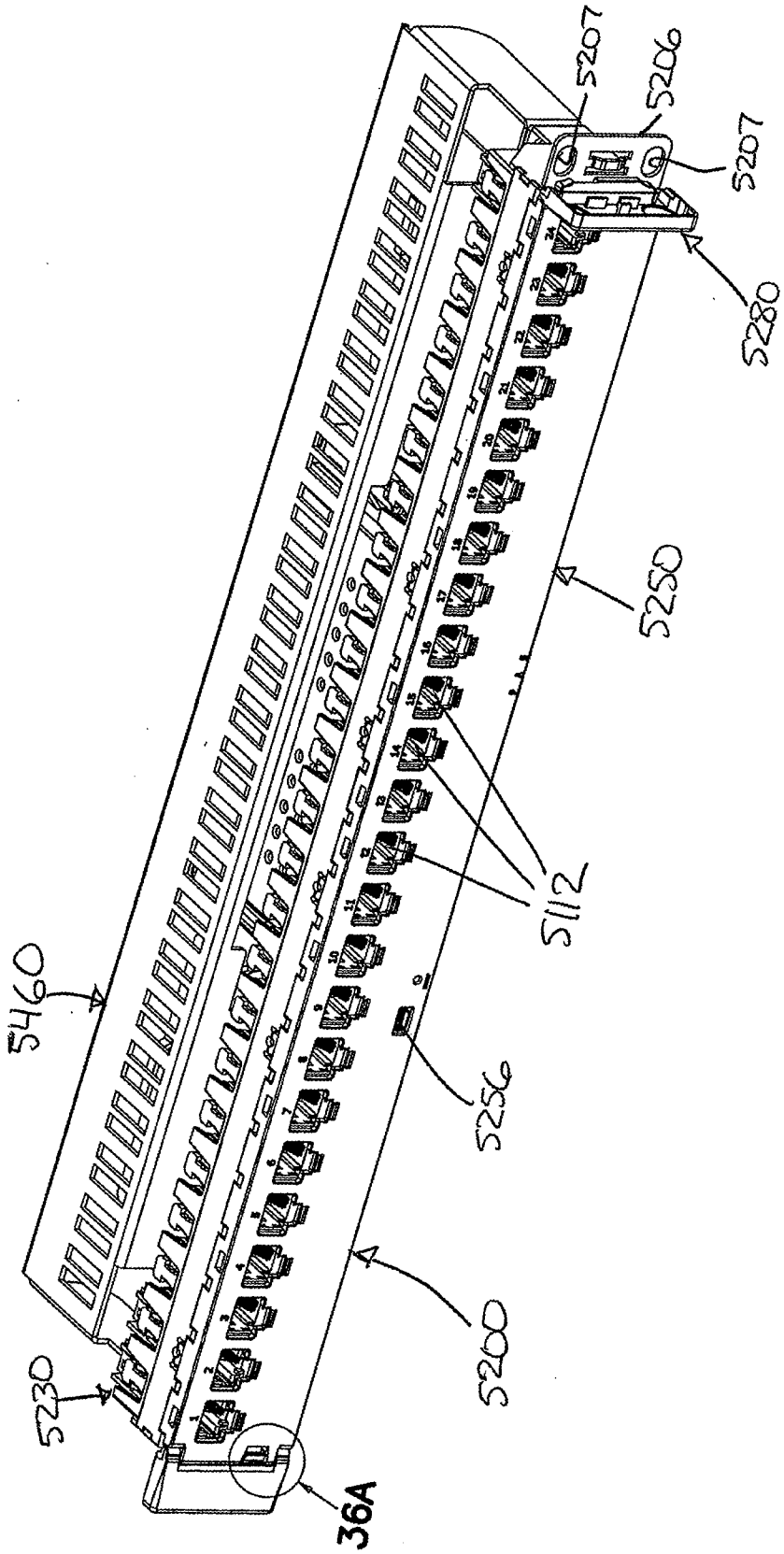

FIG. 36

FIG. 36A

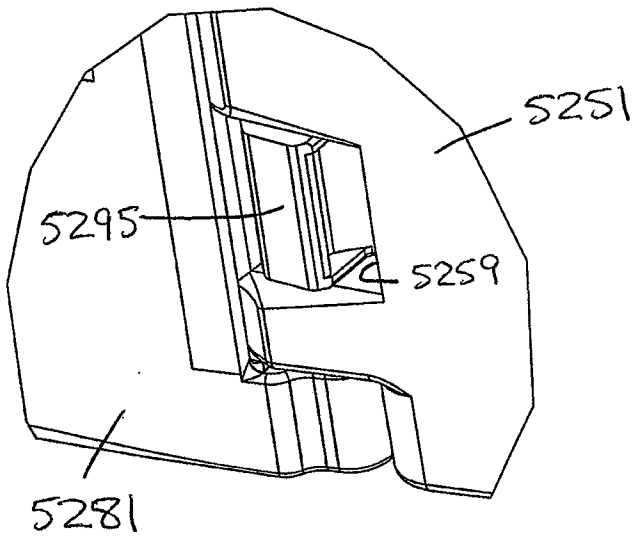

FIG. 38

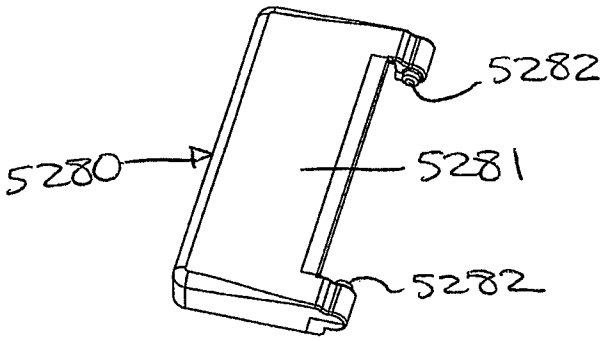

FIG. 39

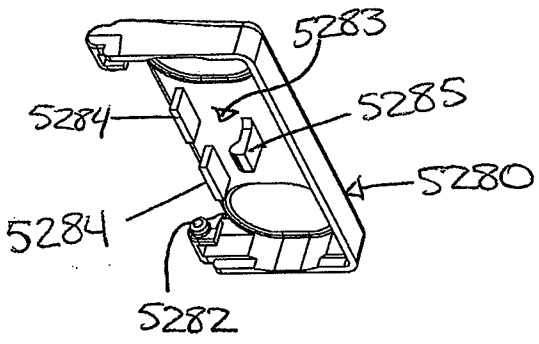

FIG. 37

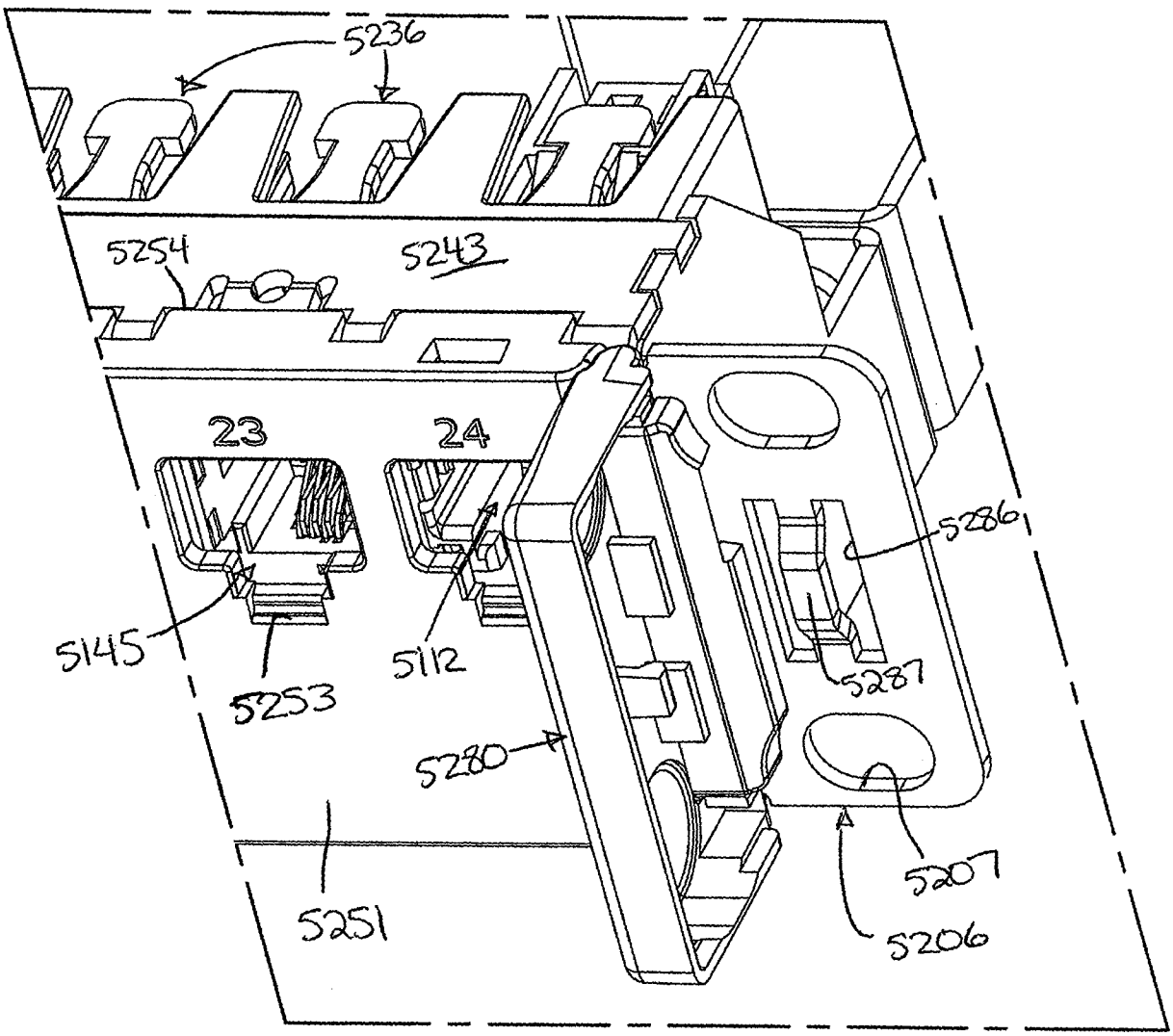
5236
5254
5243
23
24
5145
5253
5112
5286
5287
5280
5207
5206
5251

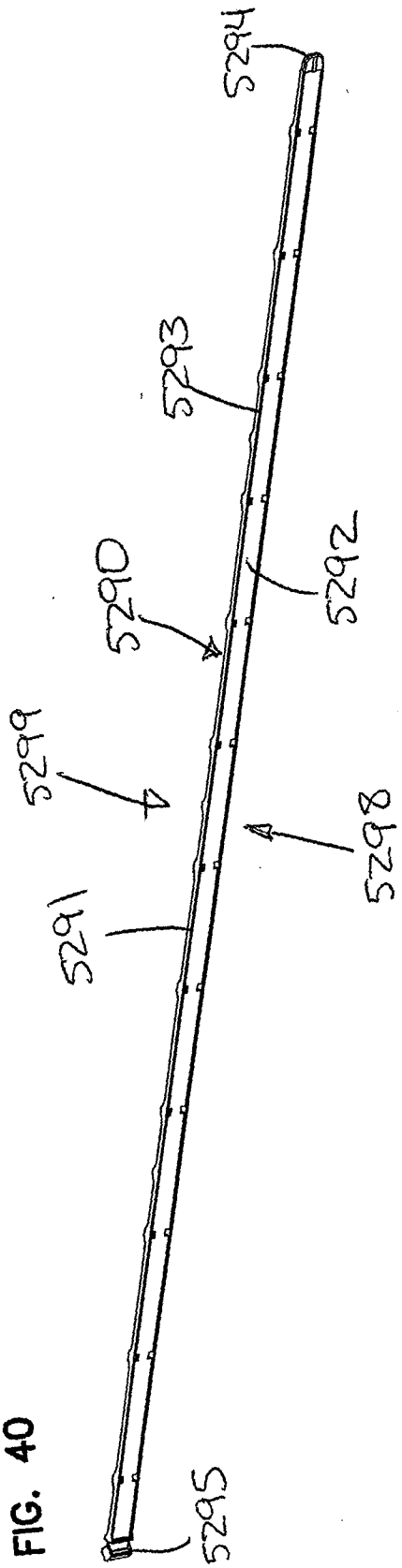
5294
5293
5290
5292
5299
5298
5291
5295

FIG. 40

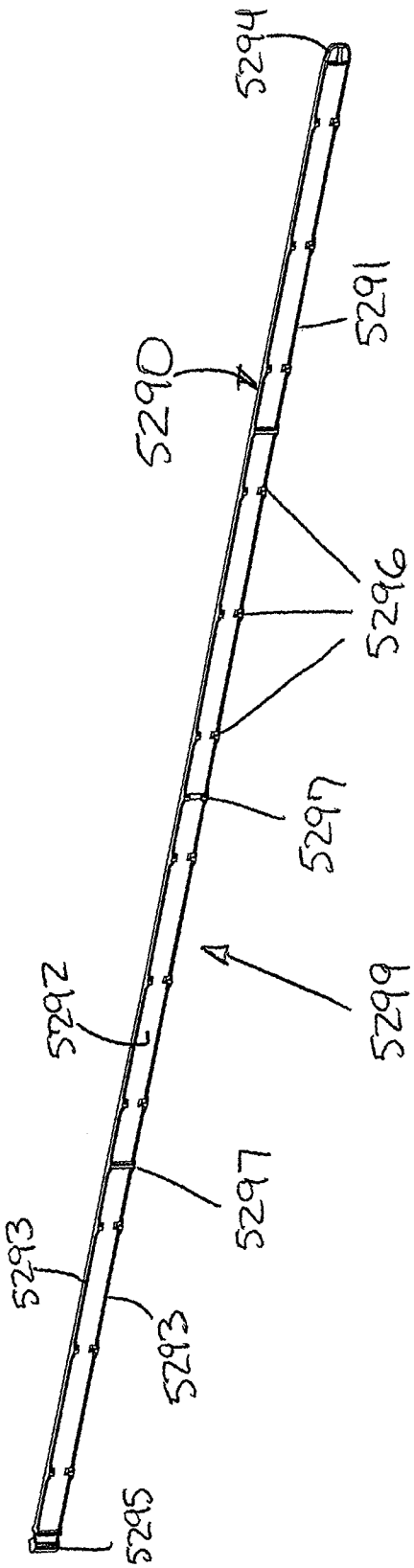
5294
5291
5290
5296
5297
5299
5292
5297
5293
5293
5295

FIG. 41

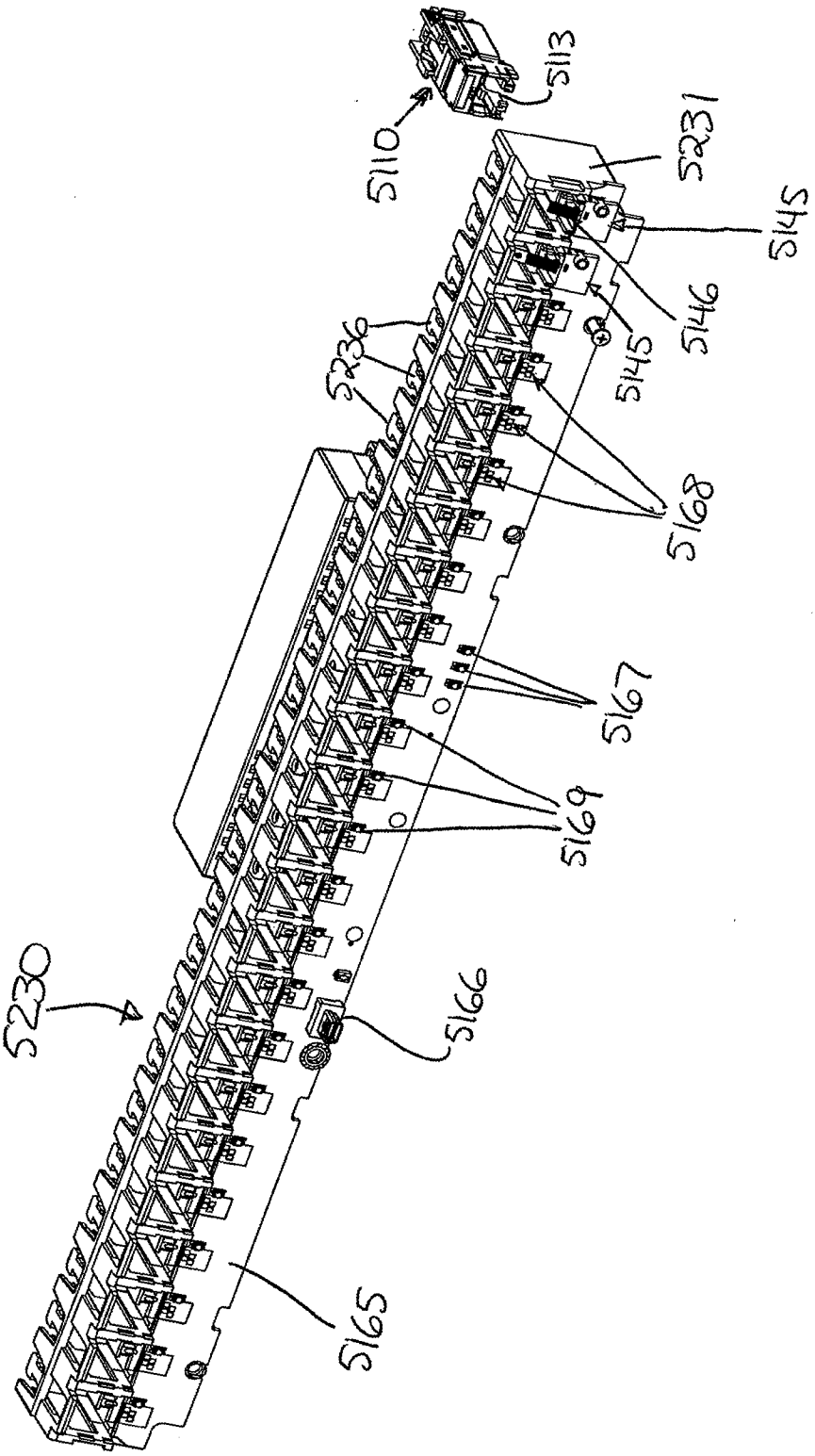
5110
5113
5231
5145
5146
5145
5236
5168
5167
5169
5230
5166
5165

FIG. 42

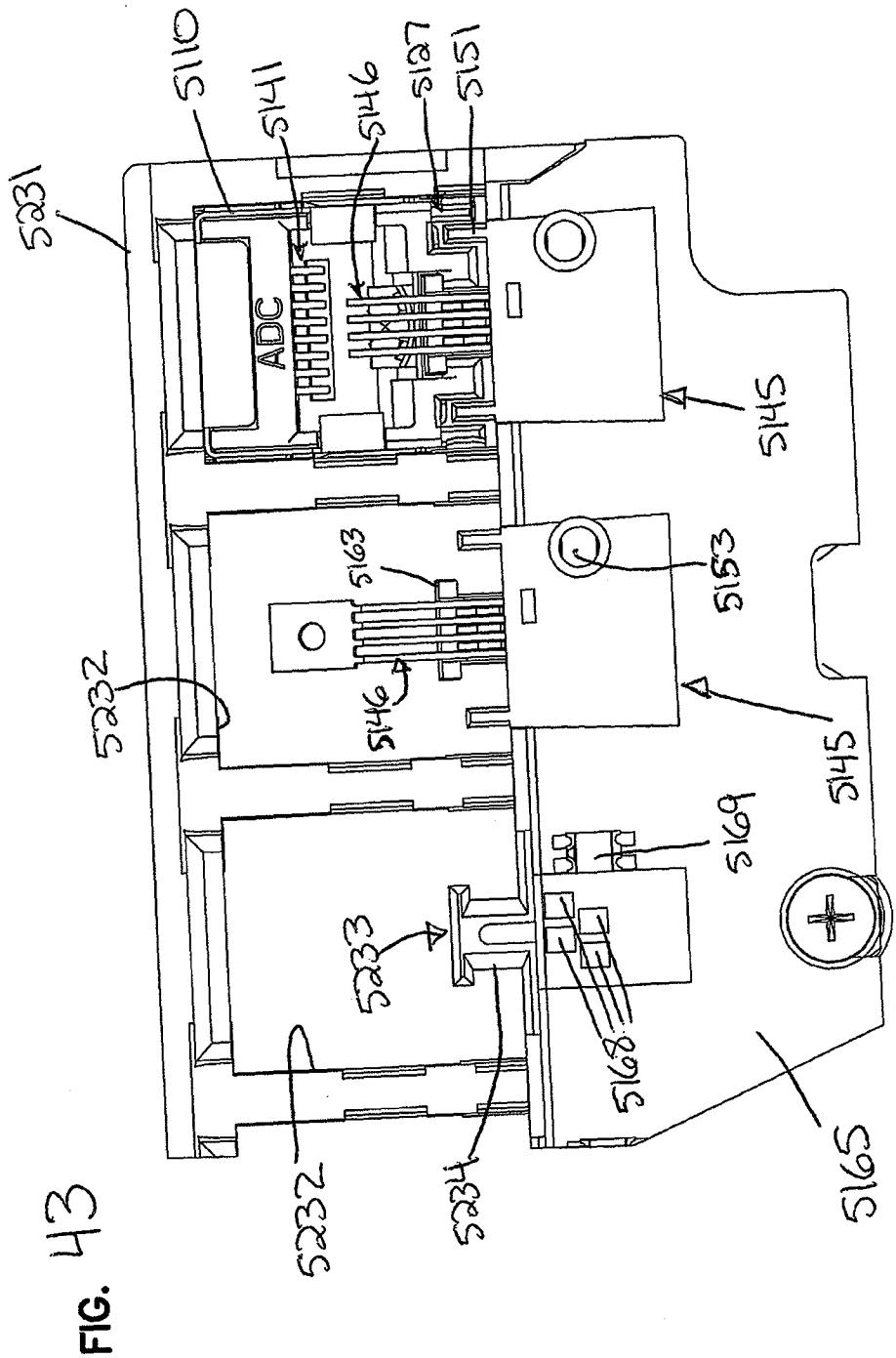
5231
5110
5141
5146
5187
5151
ADC
5145
5163
5153
5232
5146
5145
5169
5233
5168
5165
5232
5234

FIG. 43

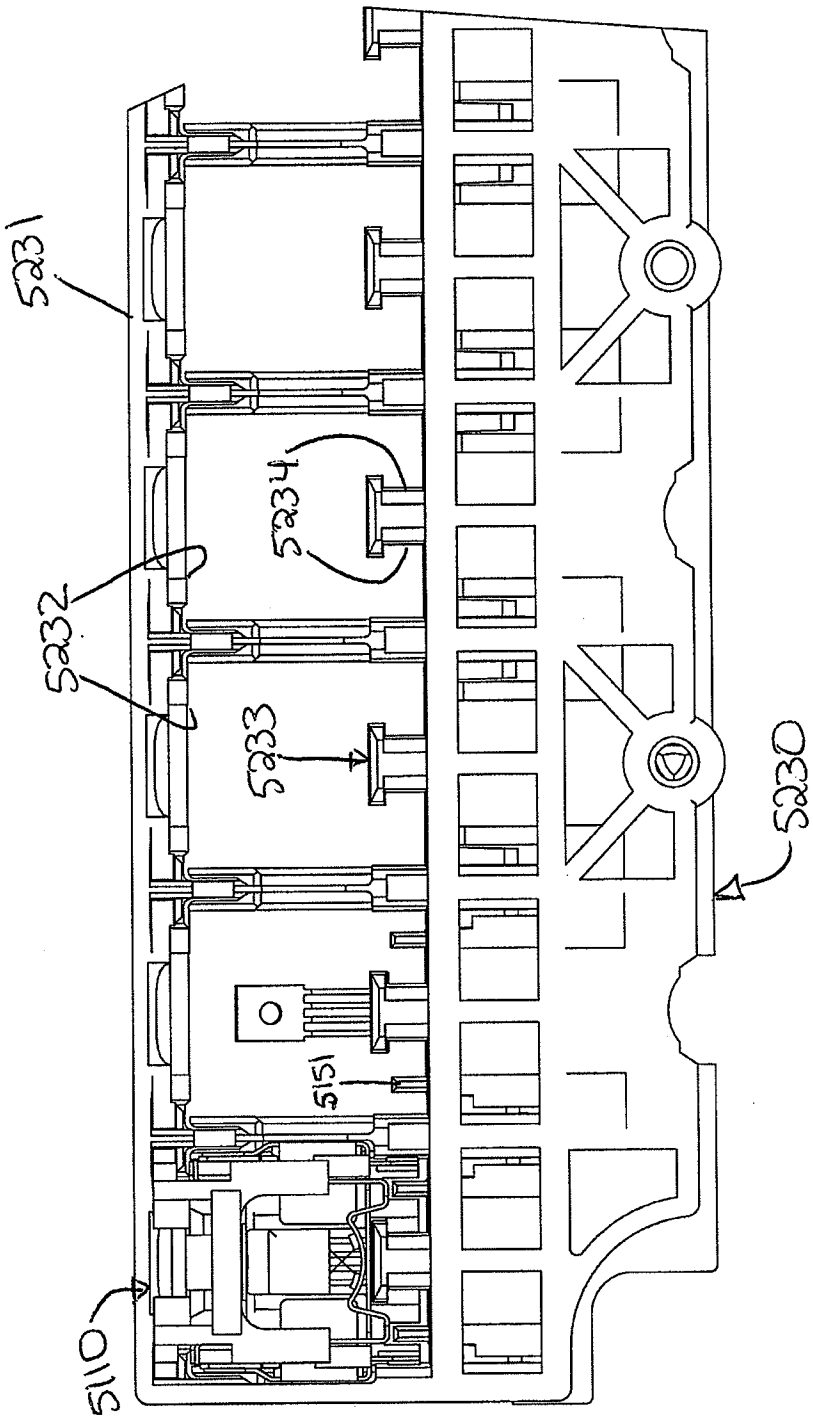

FIG. 44

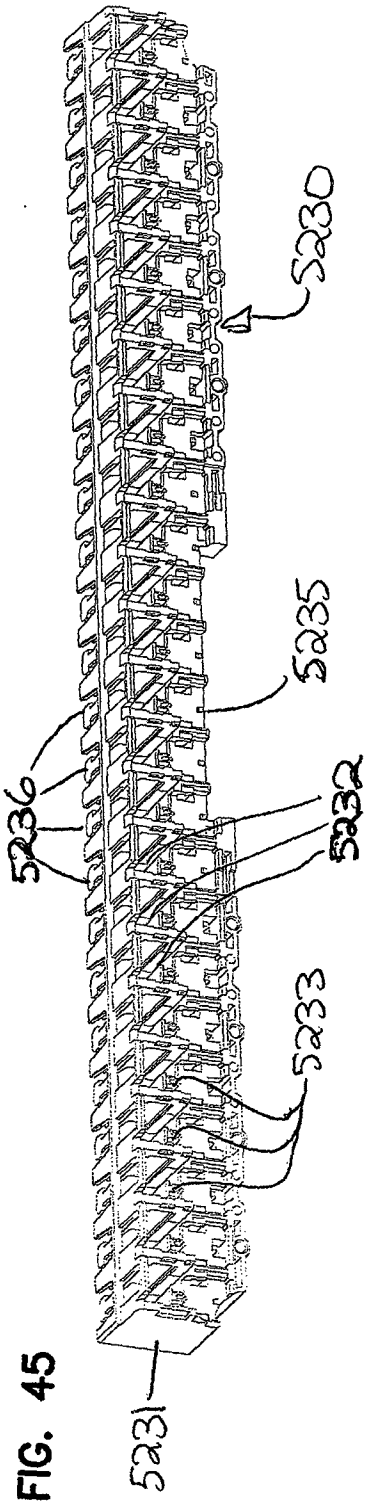

FIG. 45

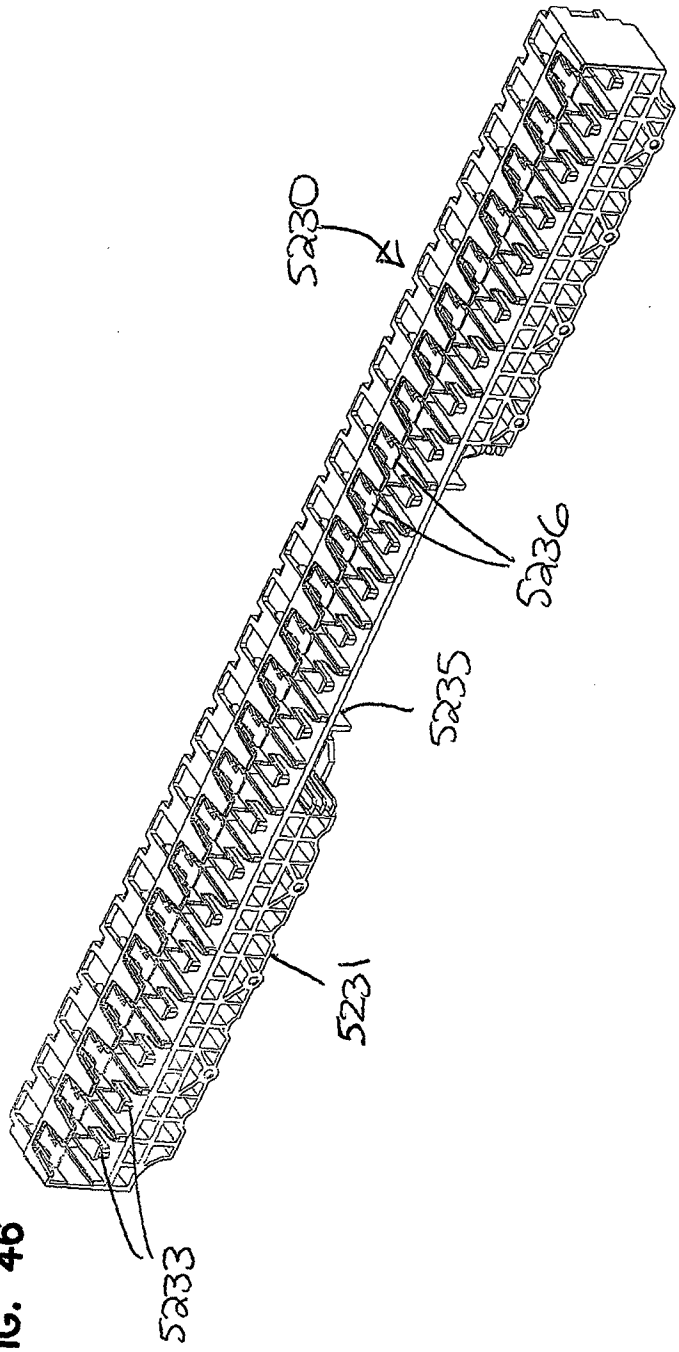

FIG. 46

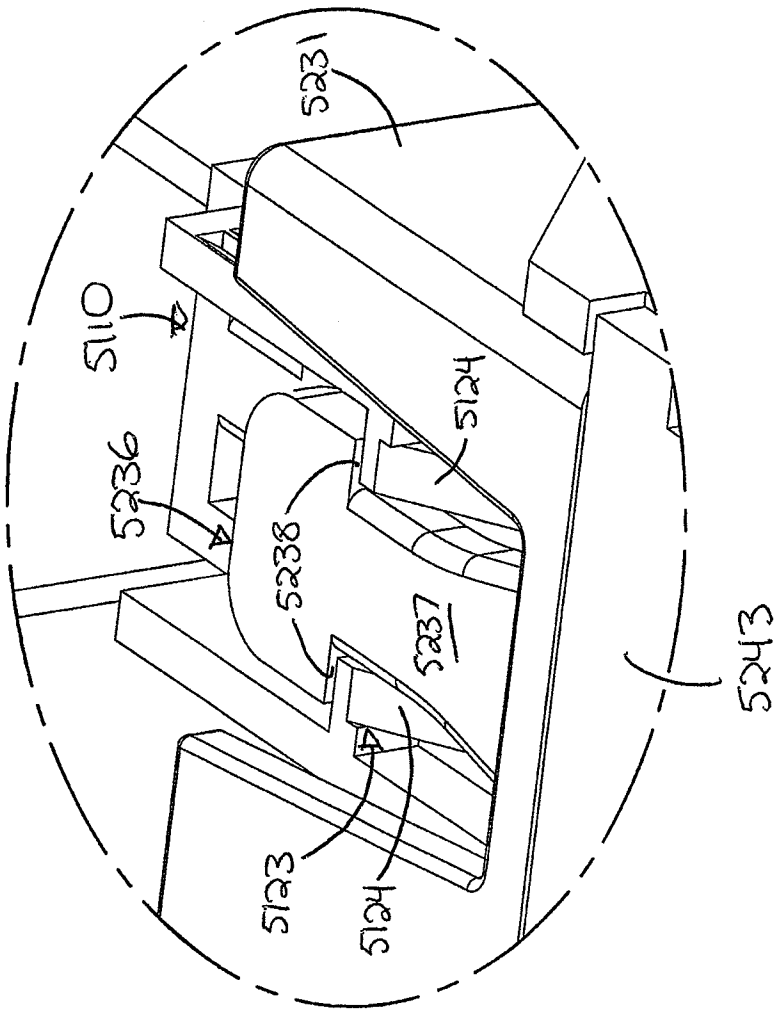

FIG. 47

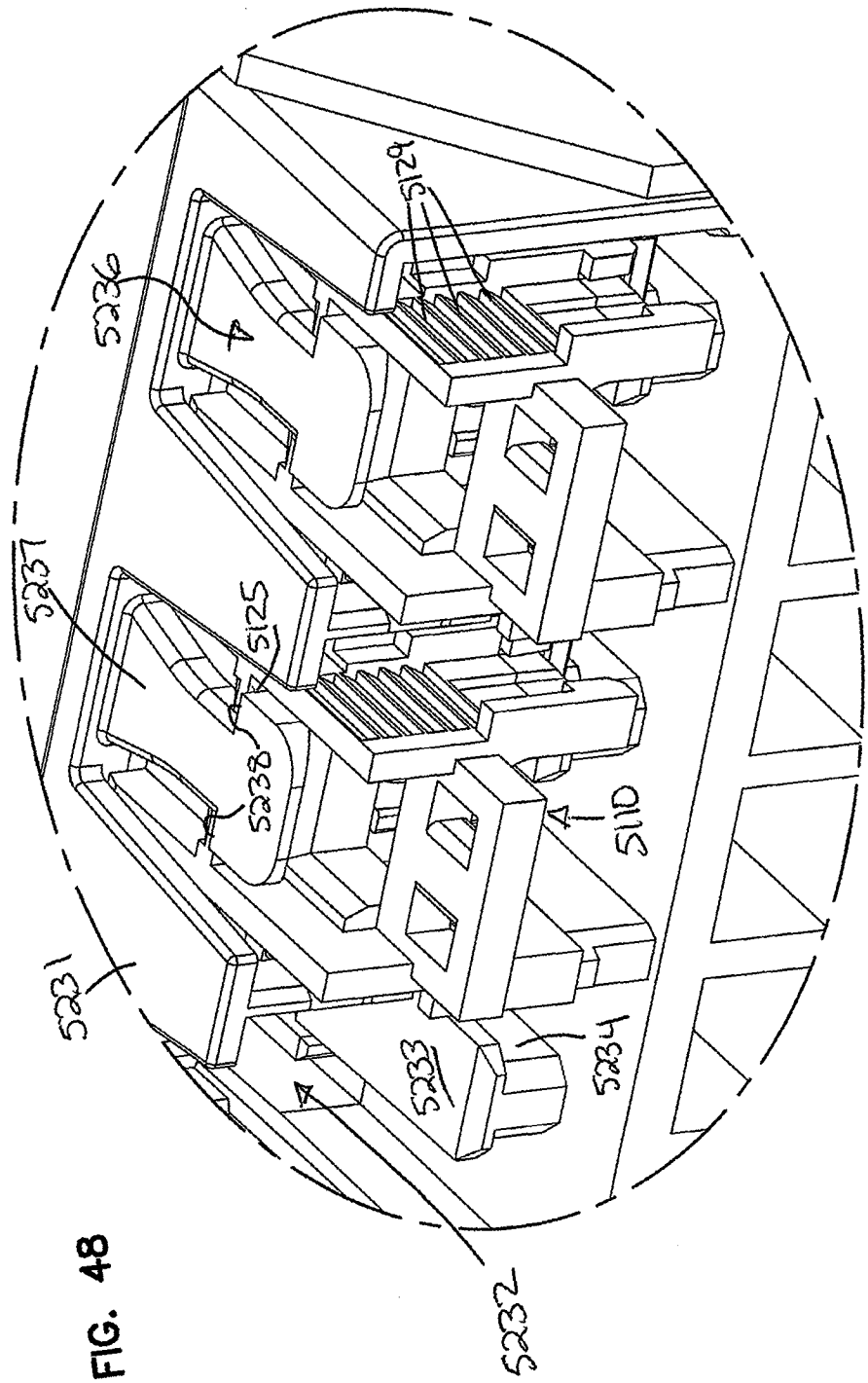

FIG. 48

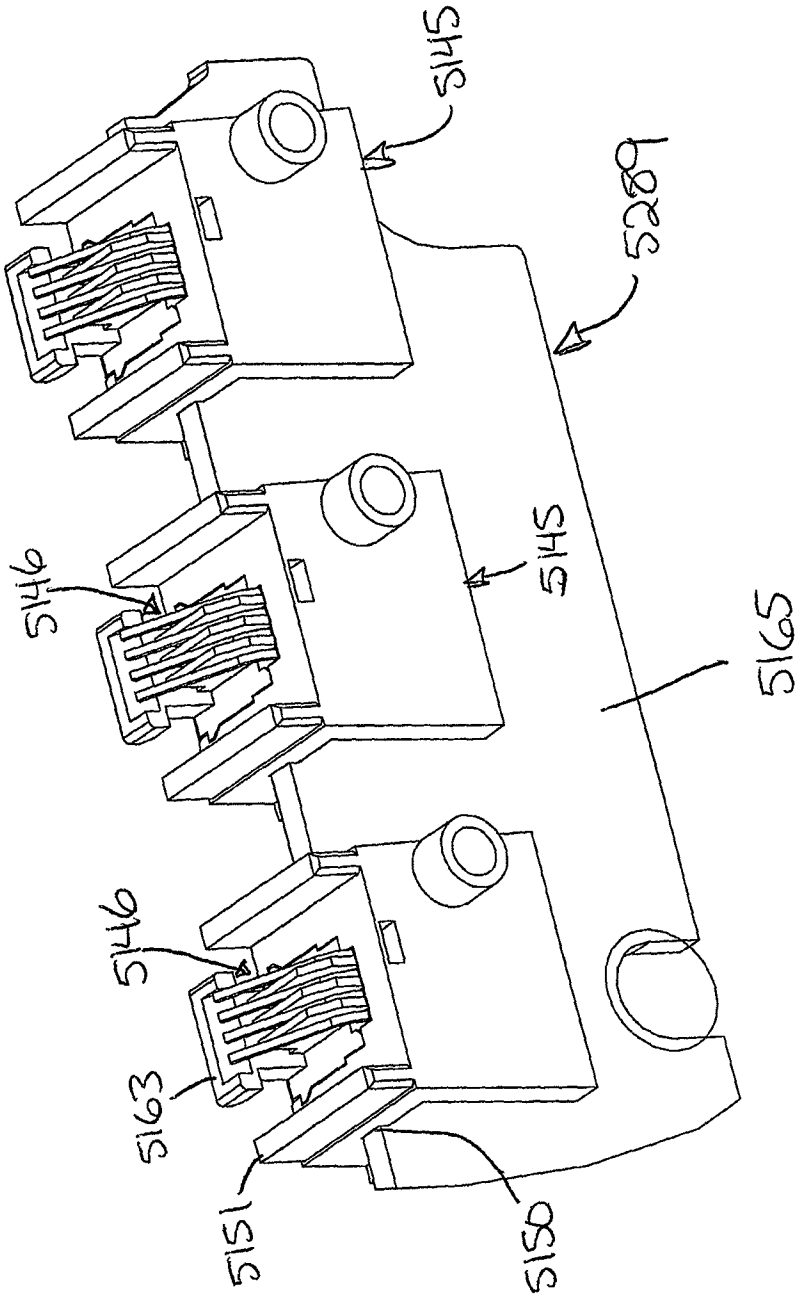

FIG. 49

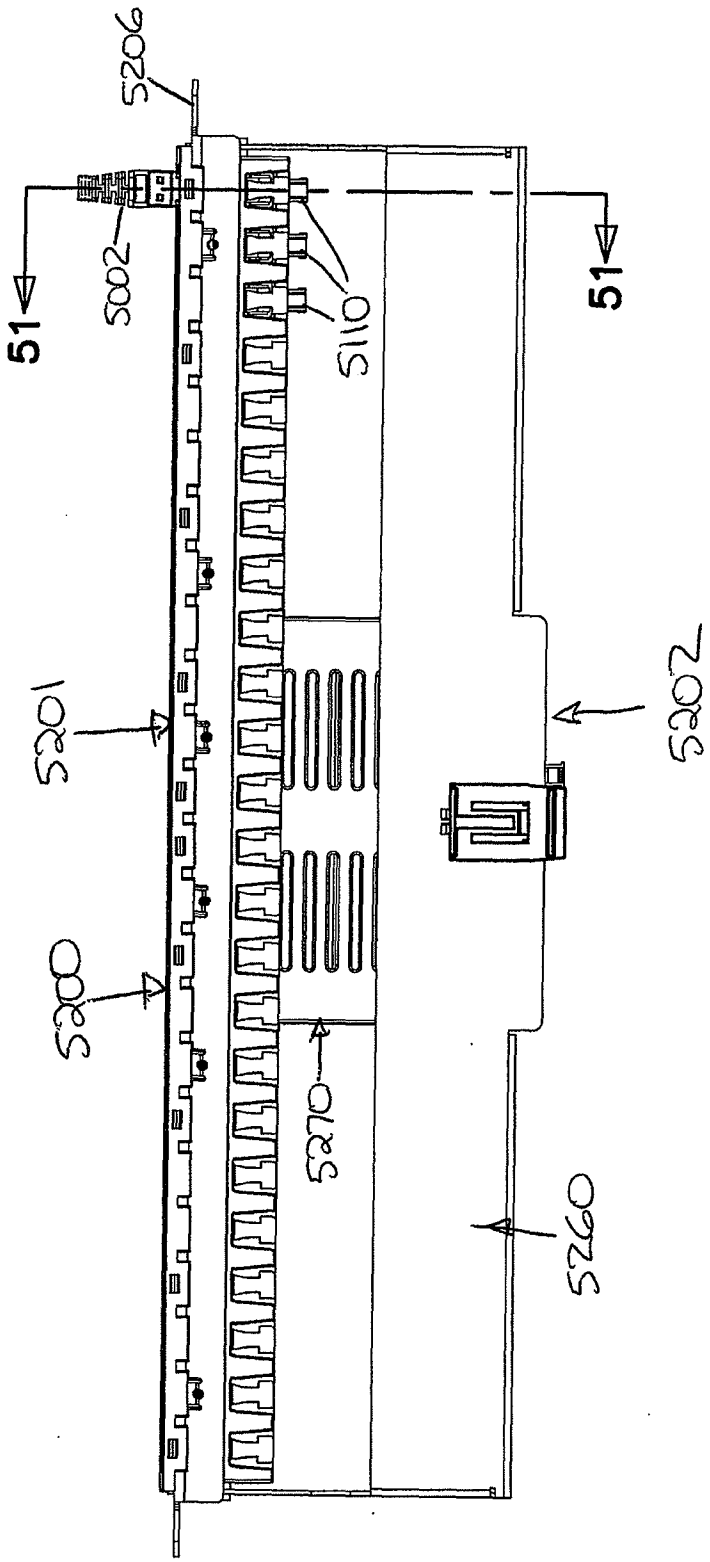

FIG. 50

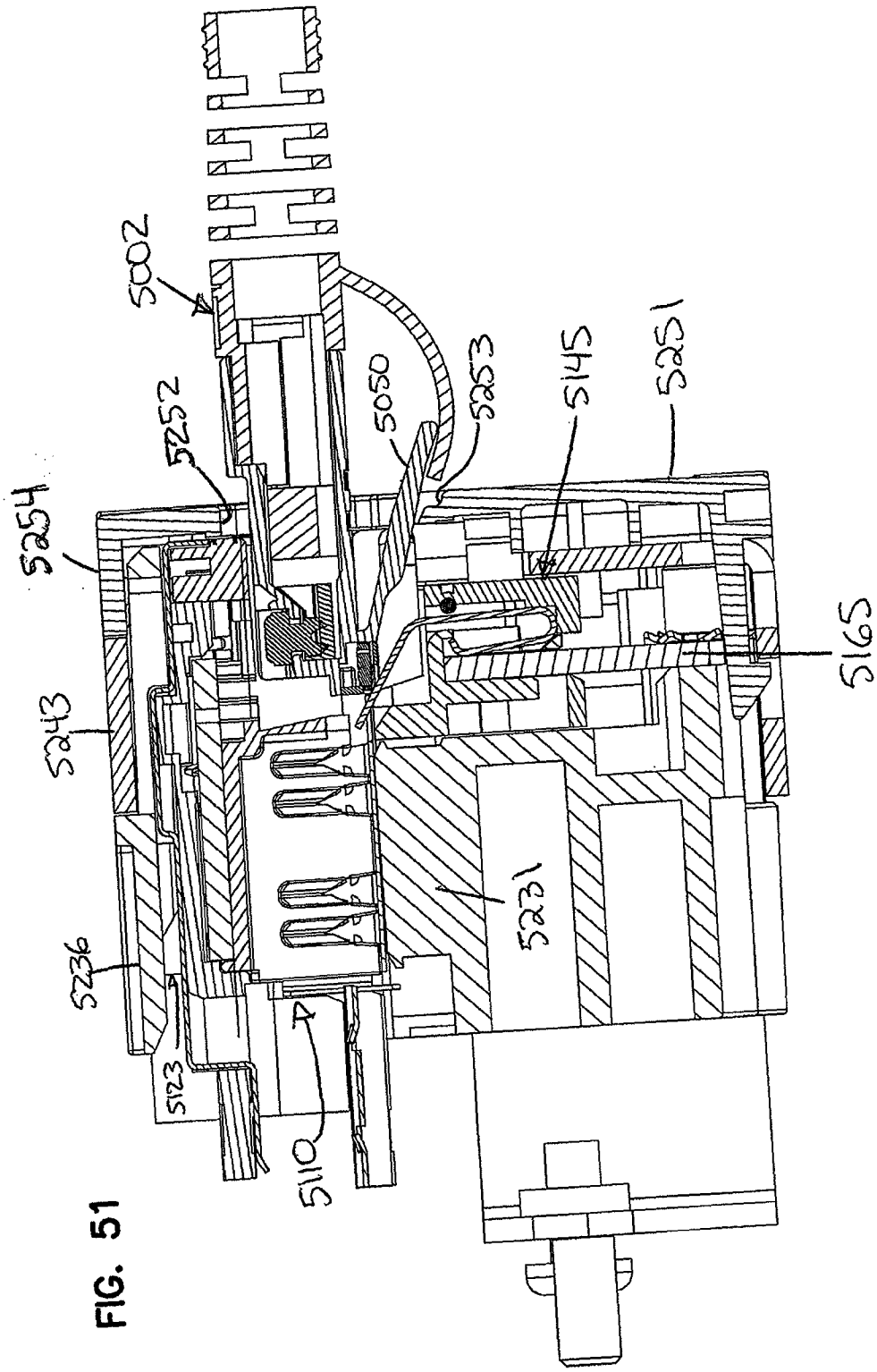
5002
5252
5254
5050
5253
5145
5251
5165
5243
5231
5236
5123
5110

FIG. 51

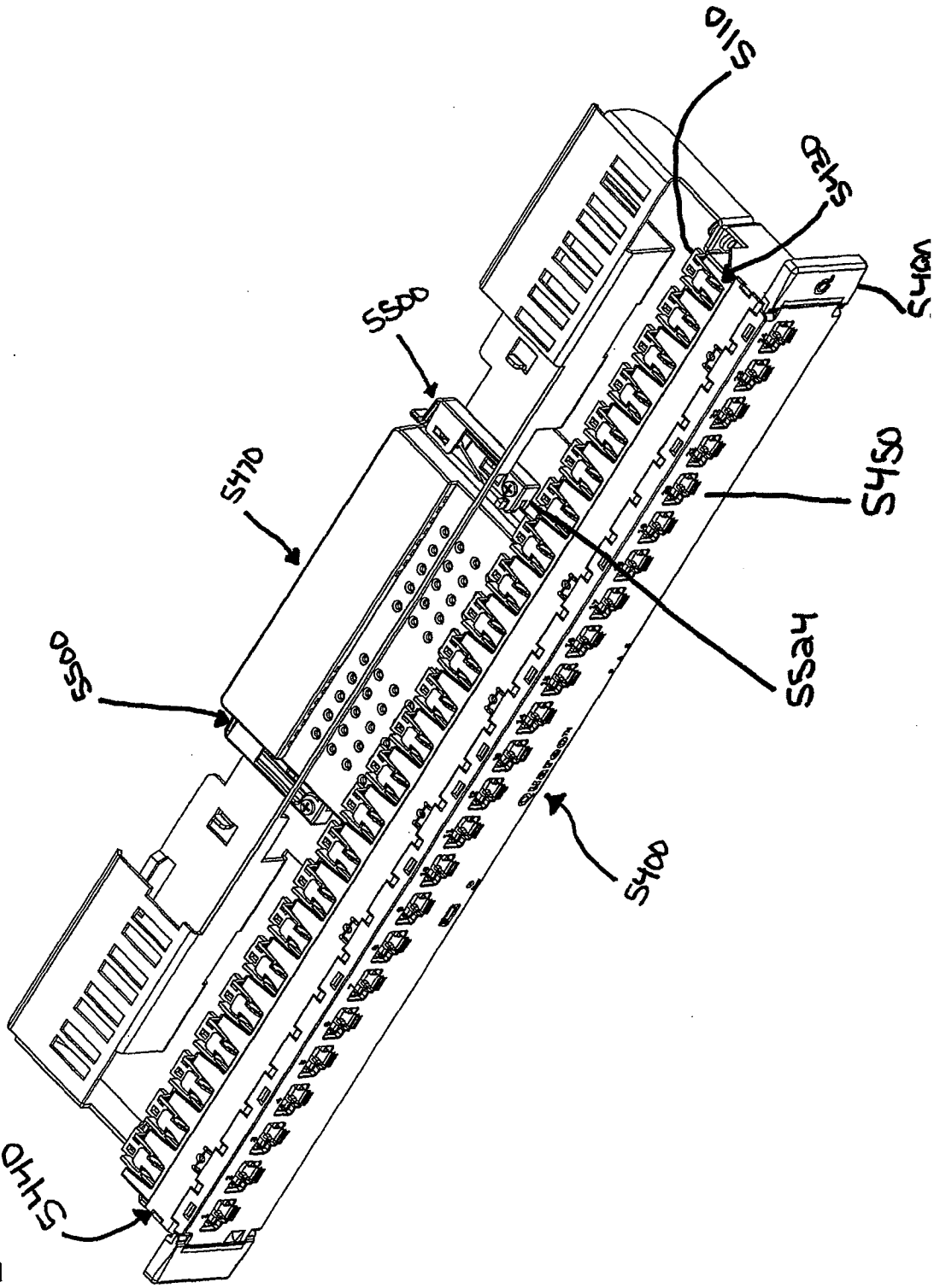

FIG. 52

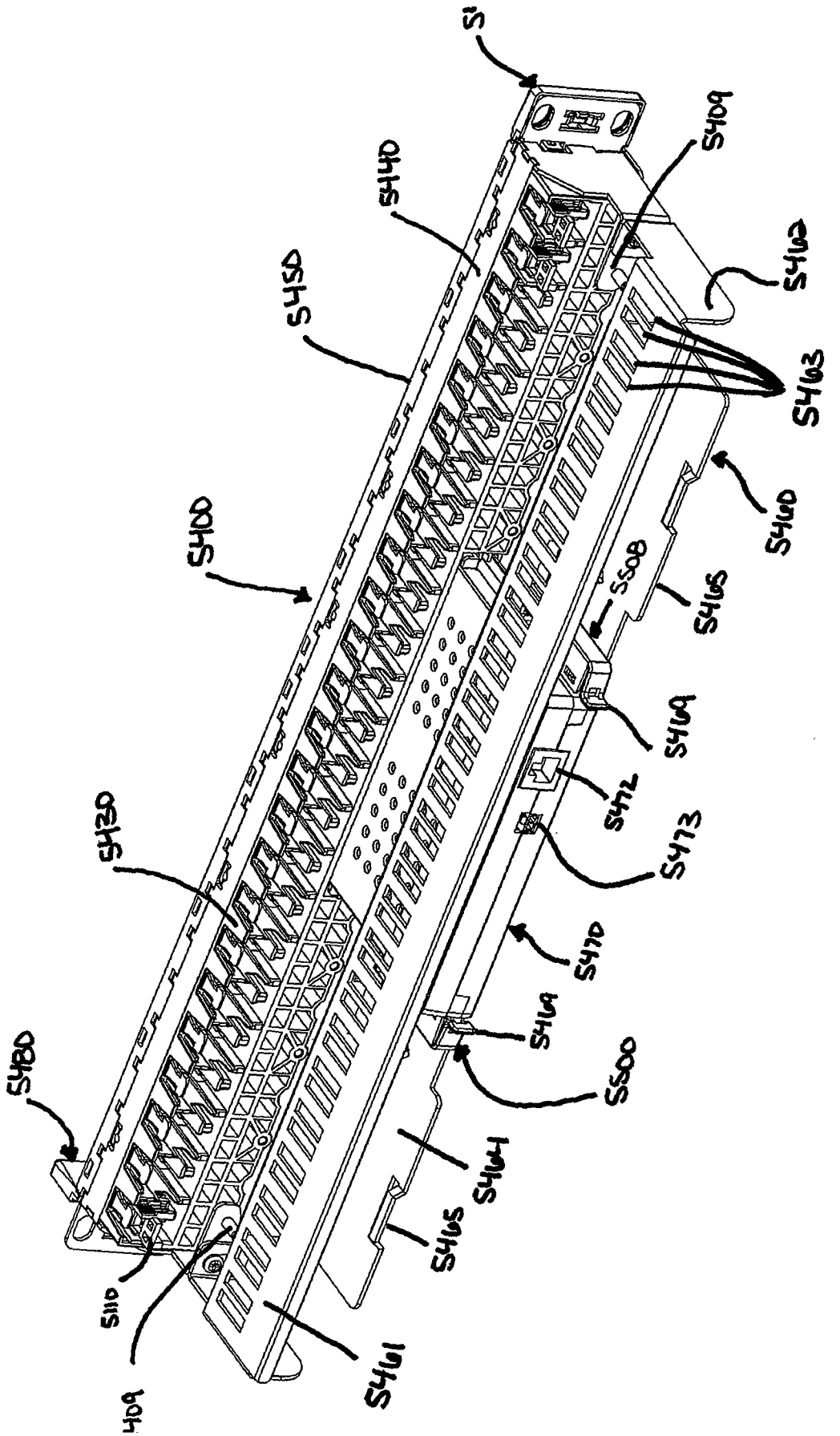
S1
S409
S440
S450
S462
S463
S400
S460
S508
S465
S469
S472
S473
S430
S470
S469
S500
S480
S464
S465
S110
S461
409

FIG. 53

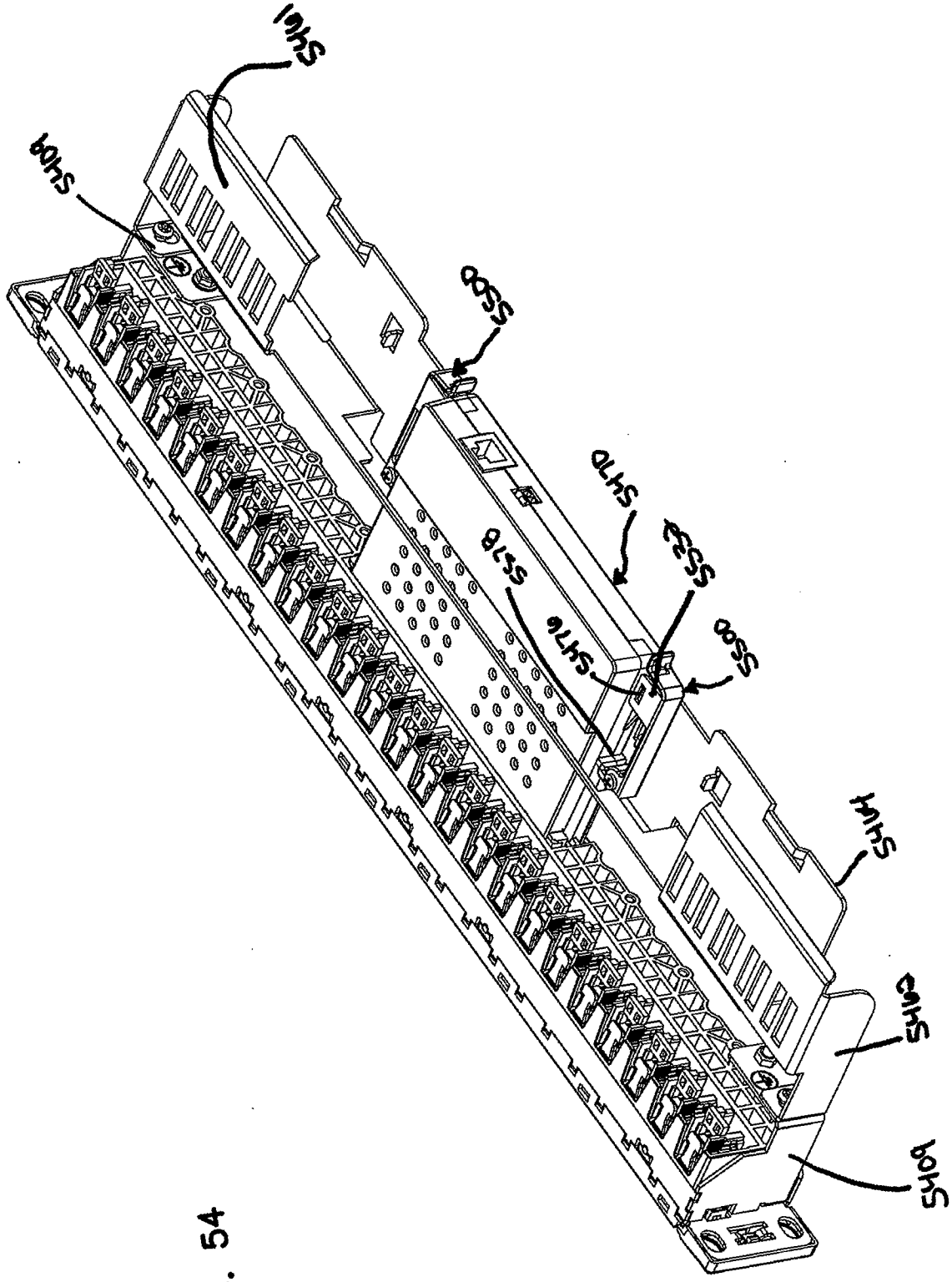

FIG. 54

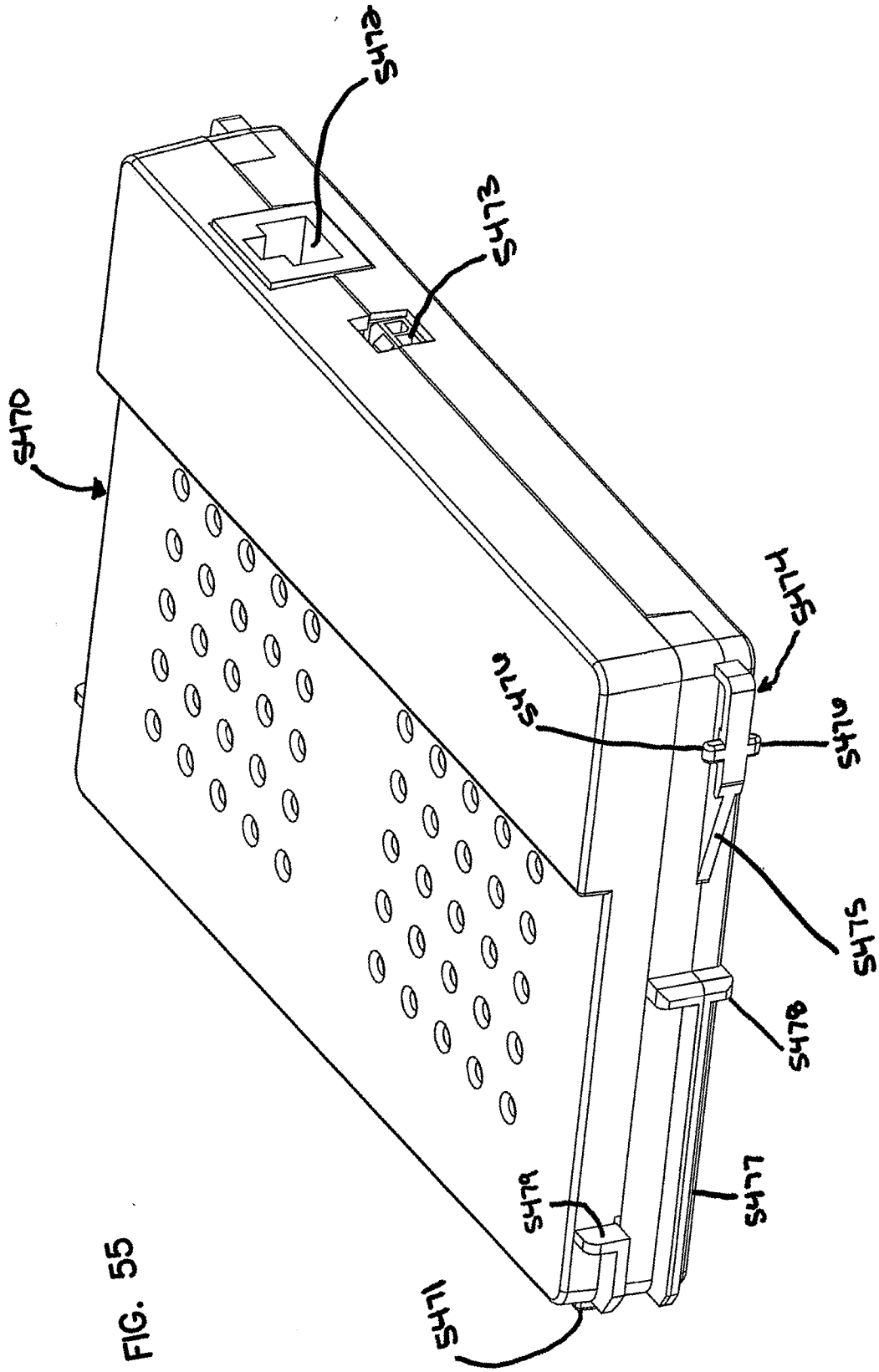

FIG. 55

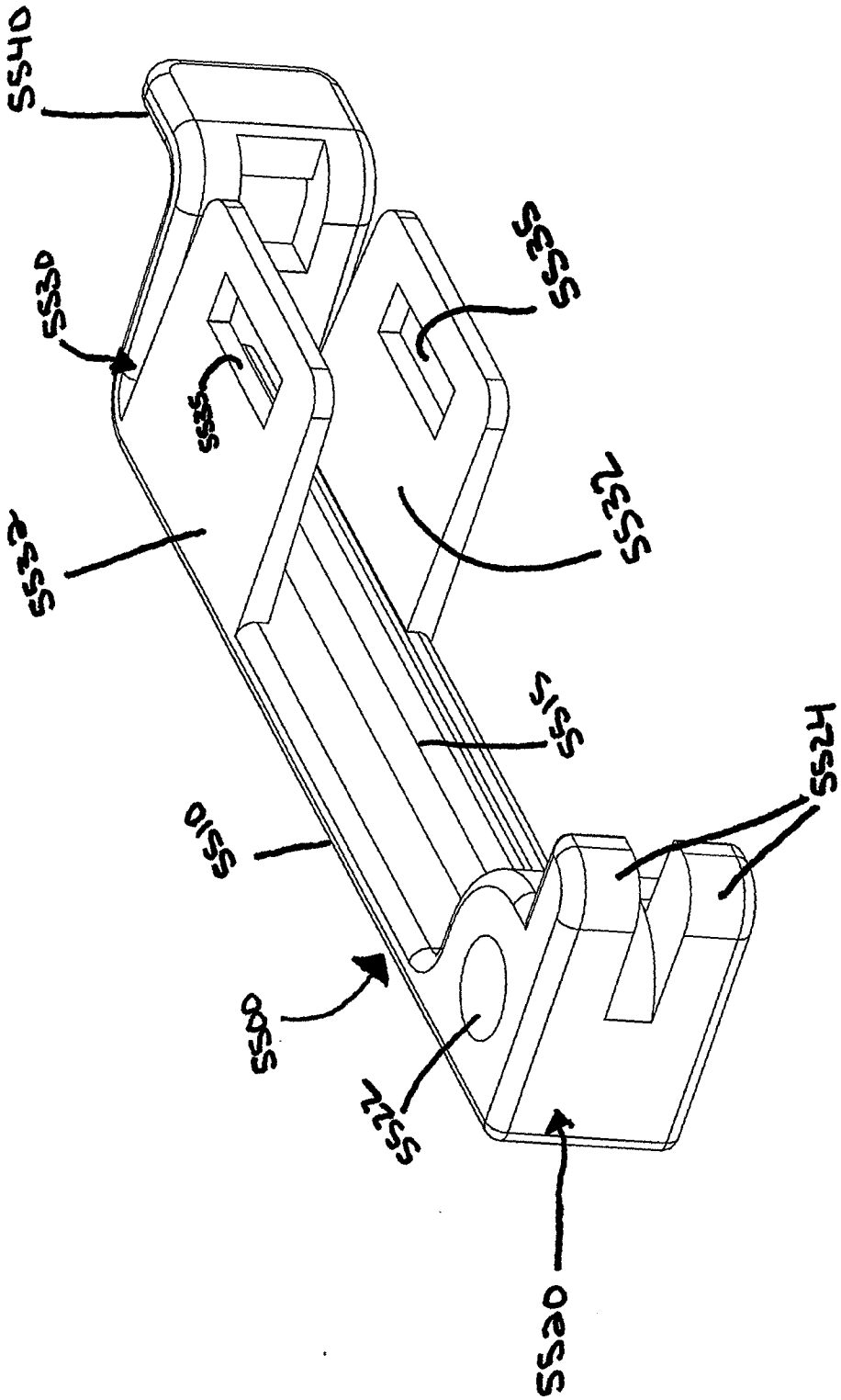

FIG. 56

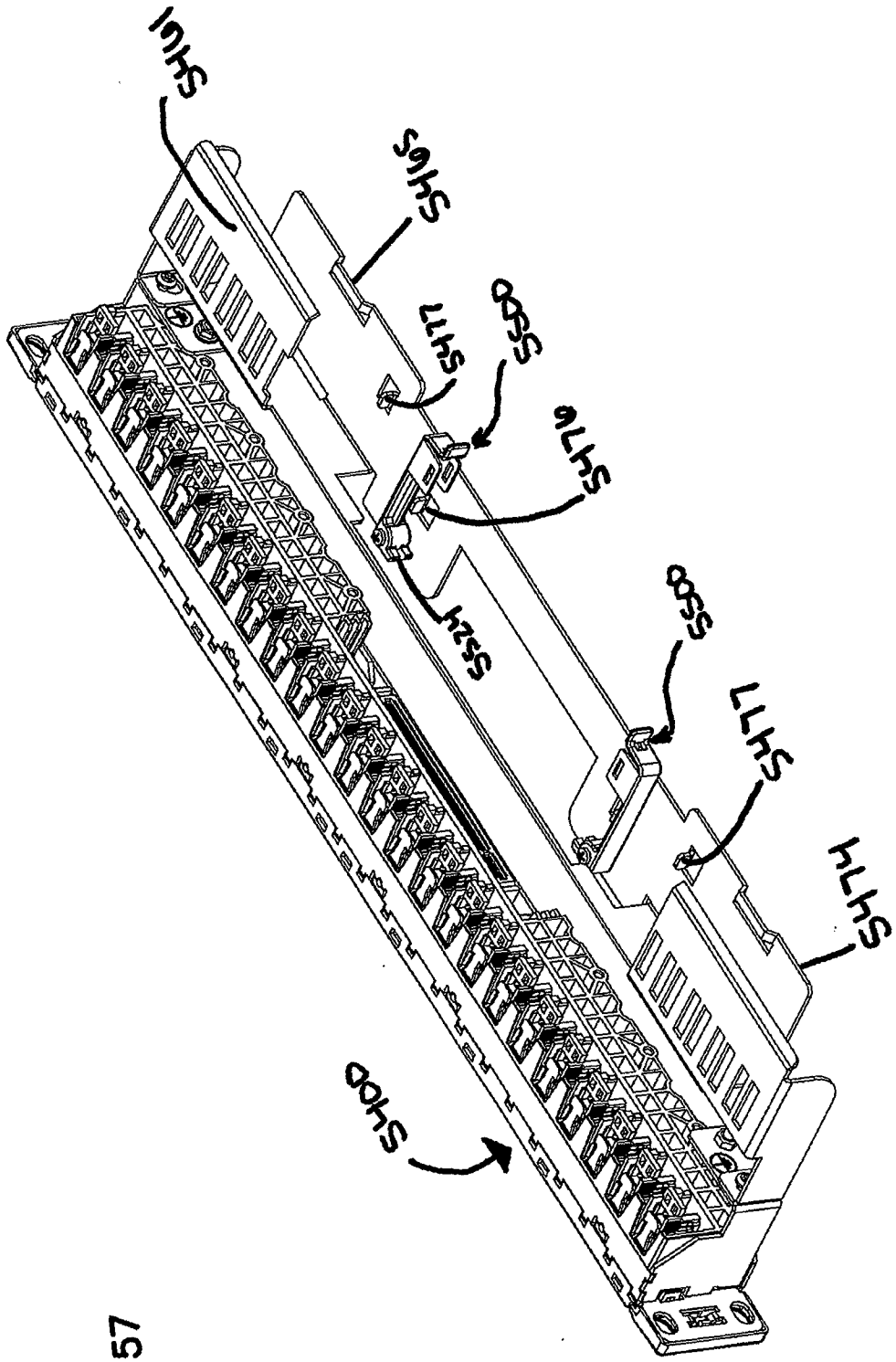

FIG. 57

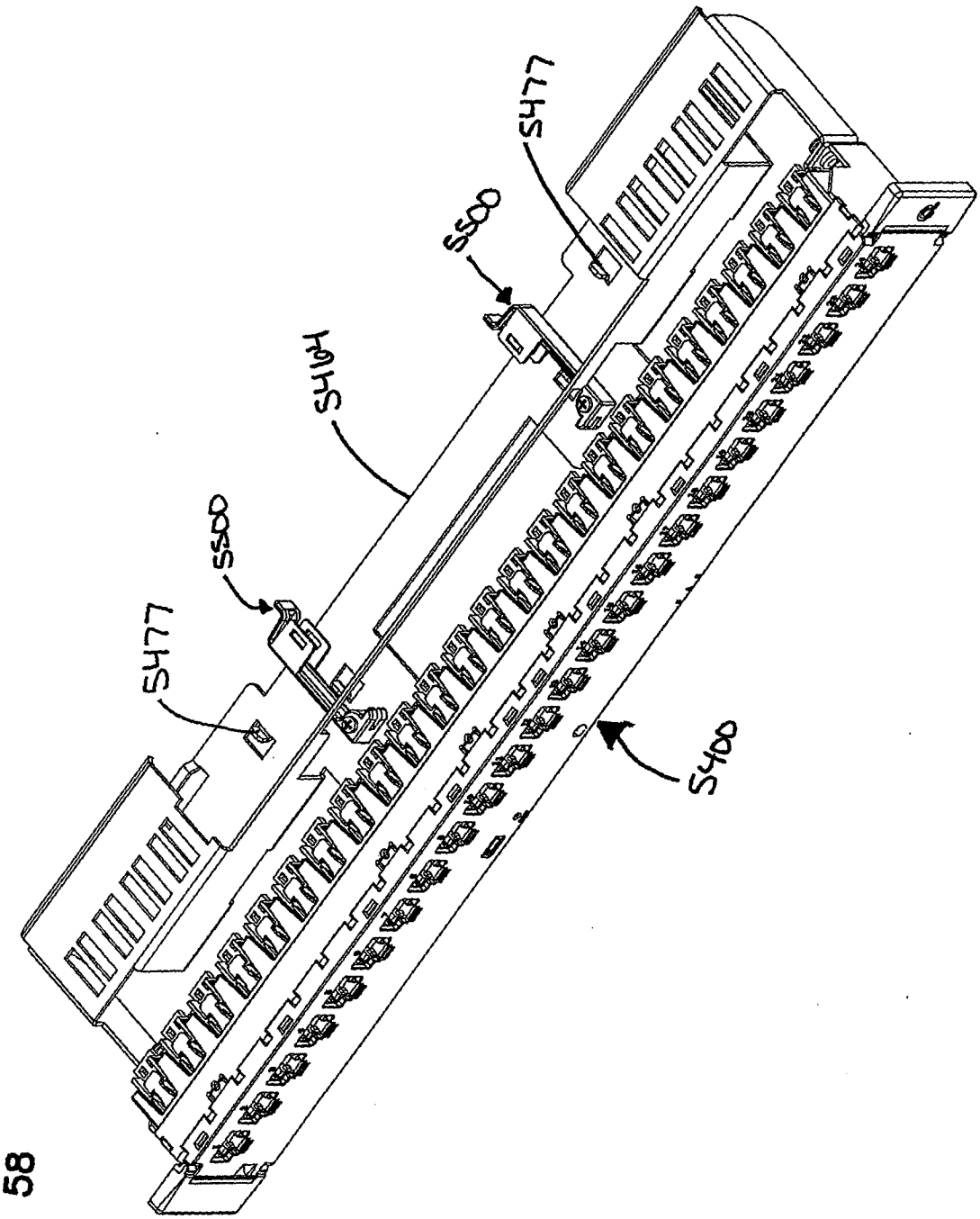

FIG. 58

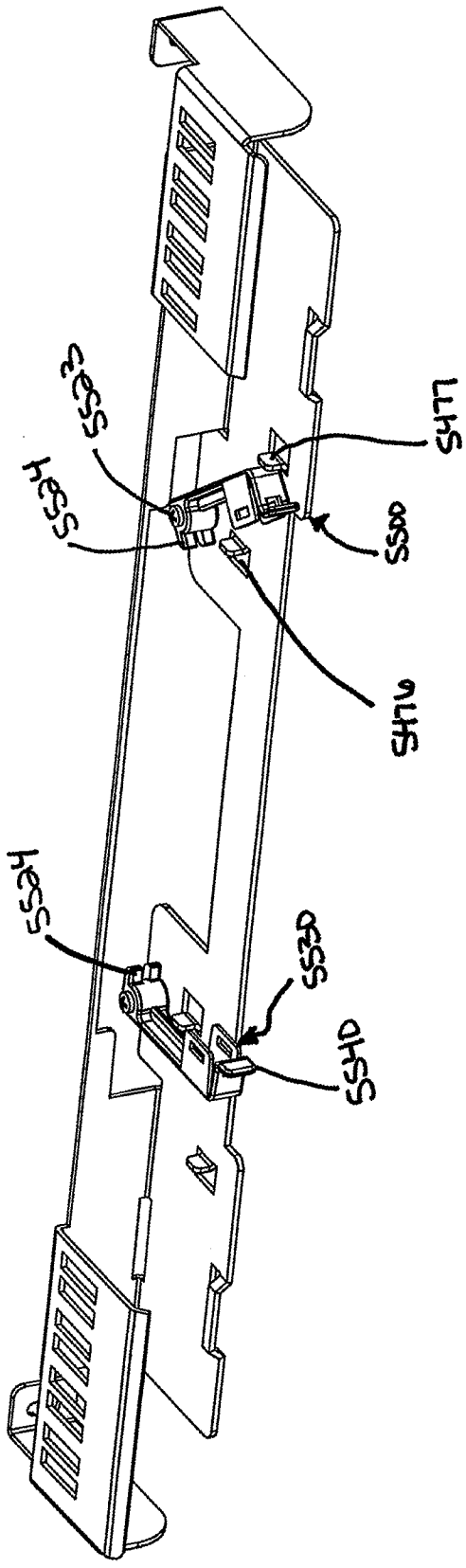

FIG. 59

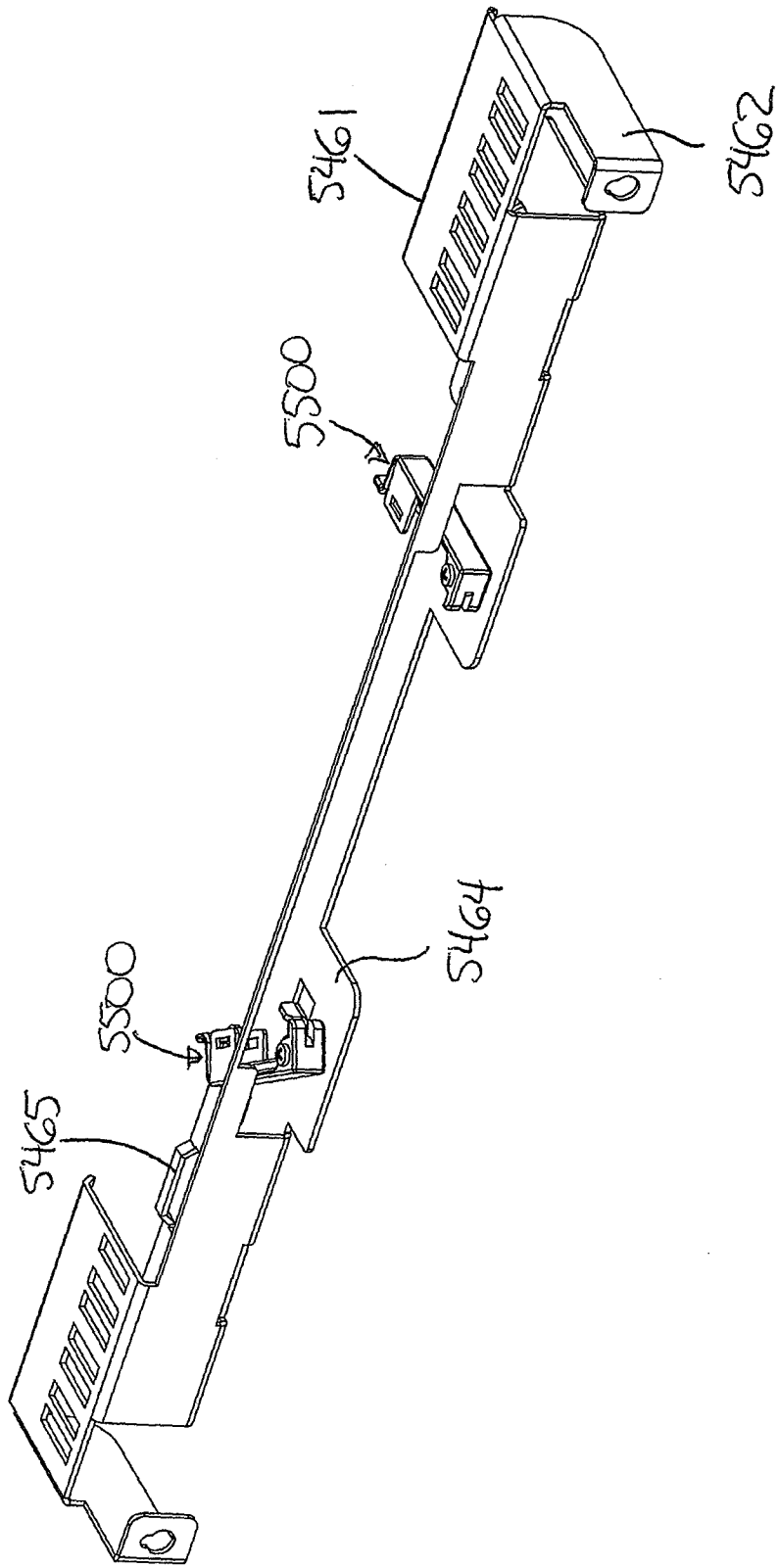

FIG. 60

FIG. 61

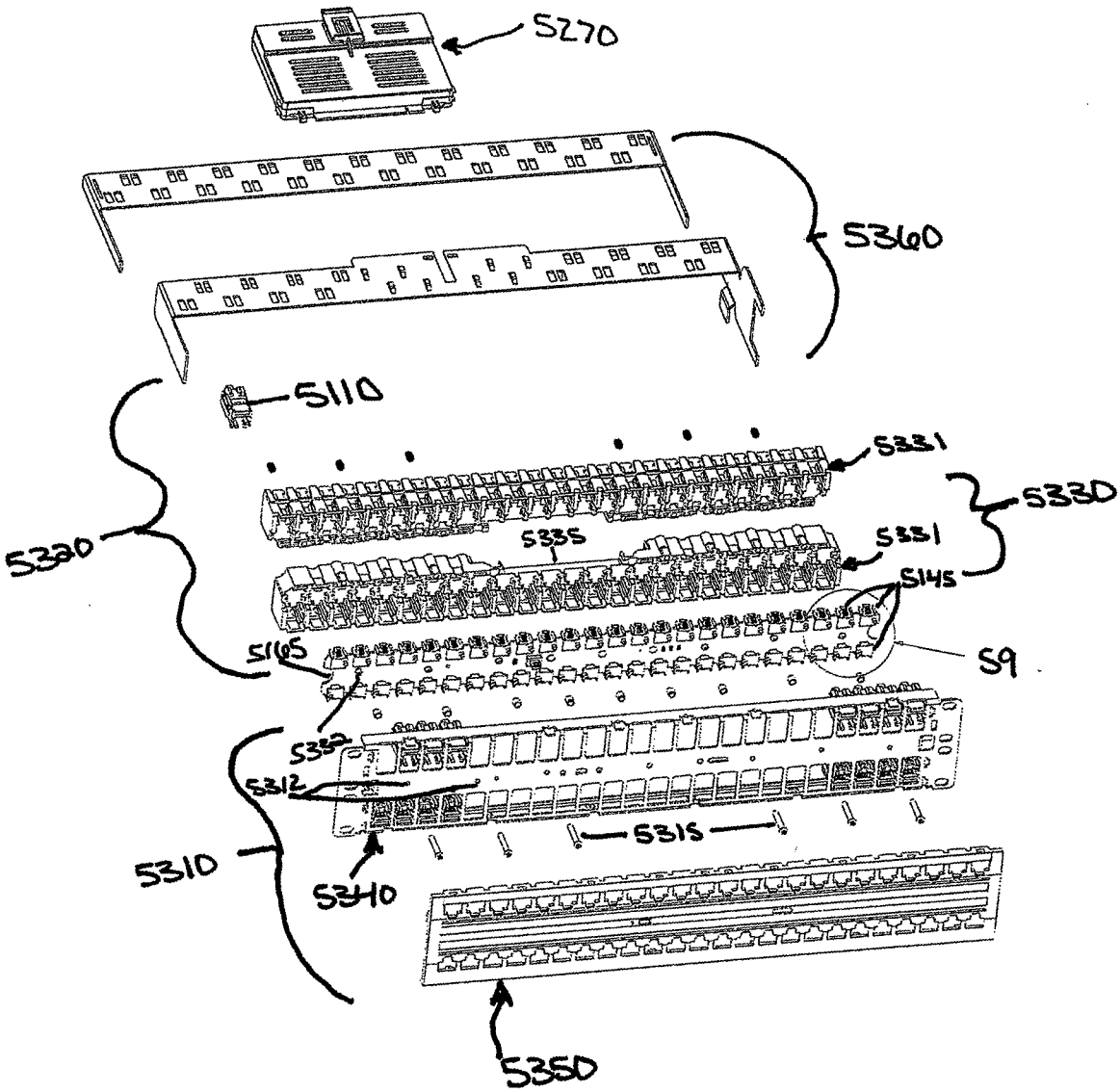
5270
5360
5110
5331
5330
5320
5335
5331
5145
5165
59
5332
5312
5315
5310
5340
5350

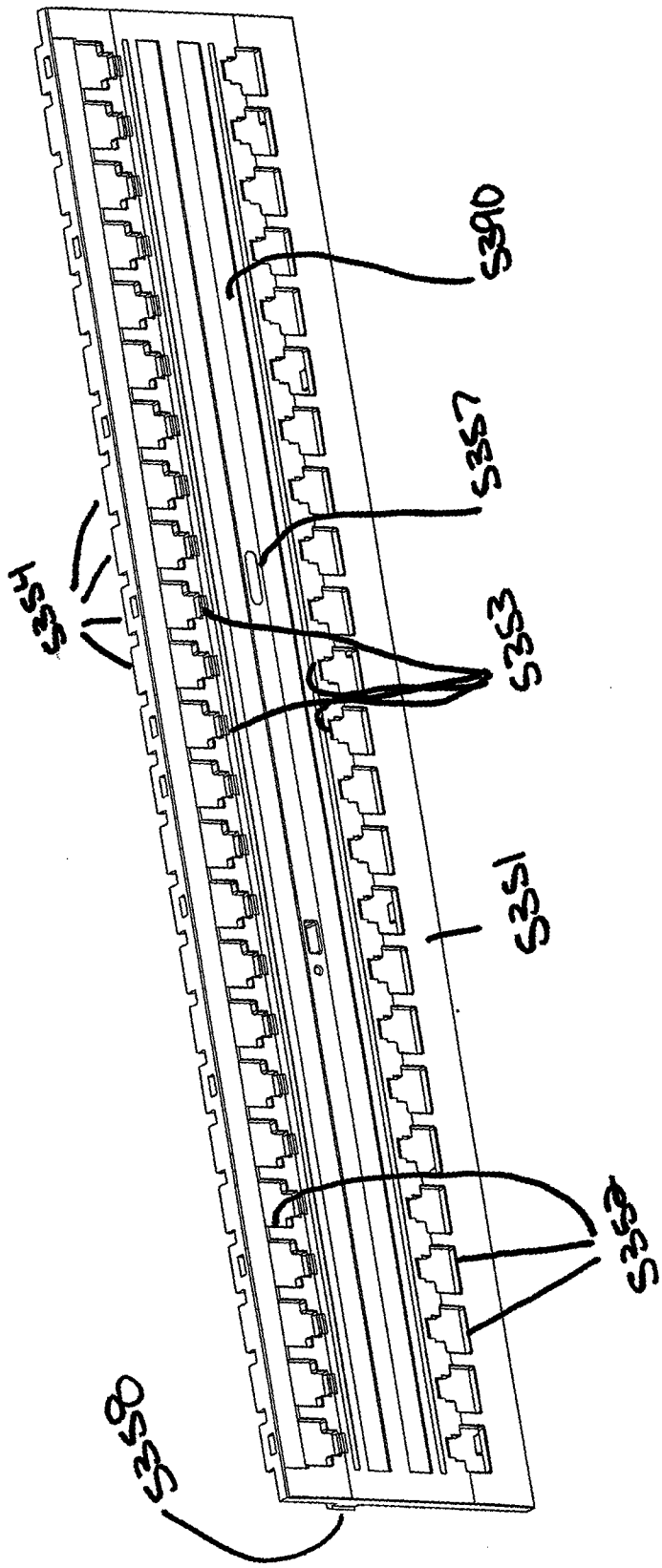

FIG. 62

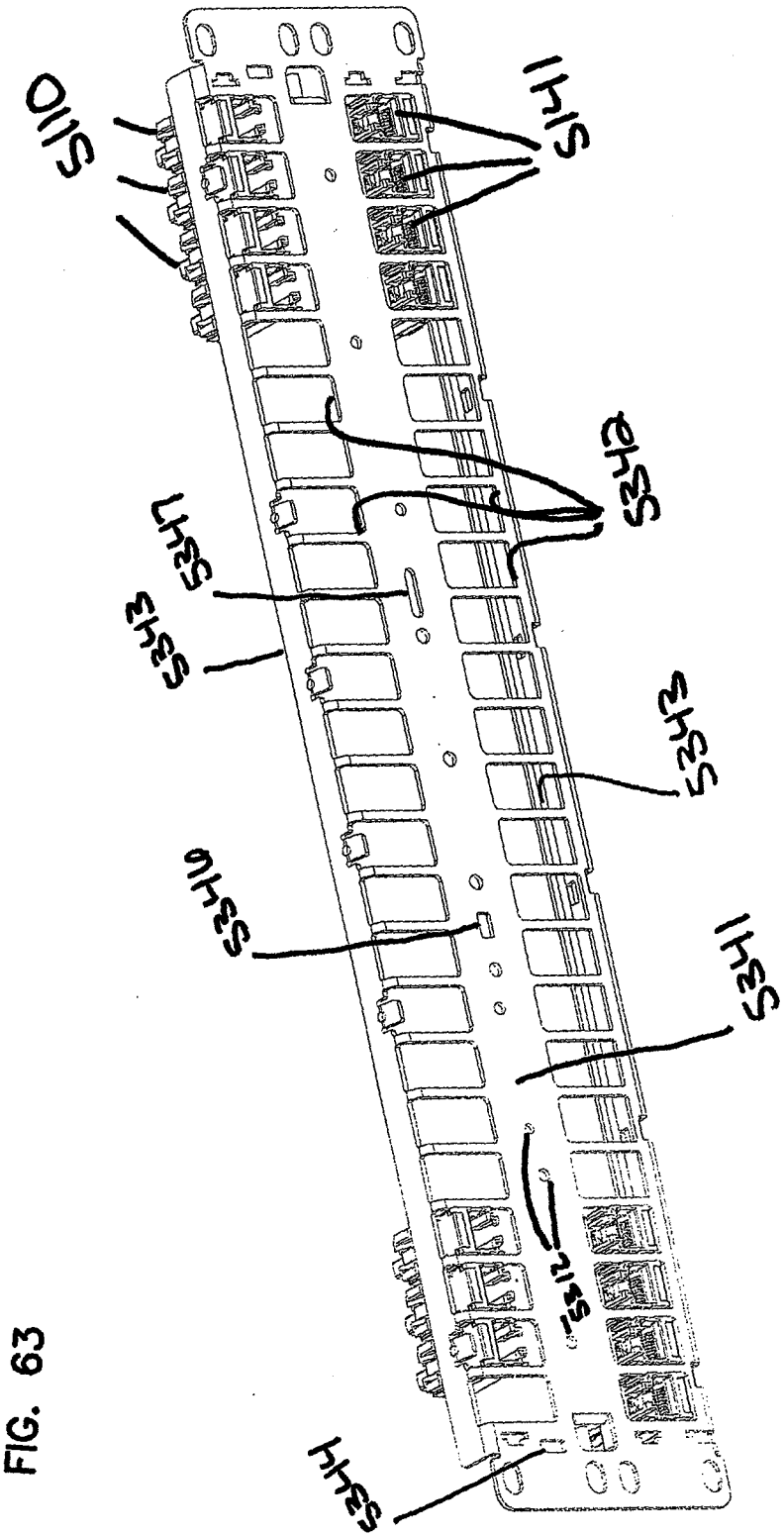

FIG. 63

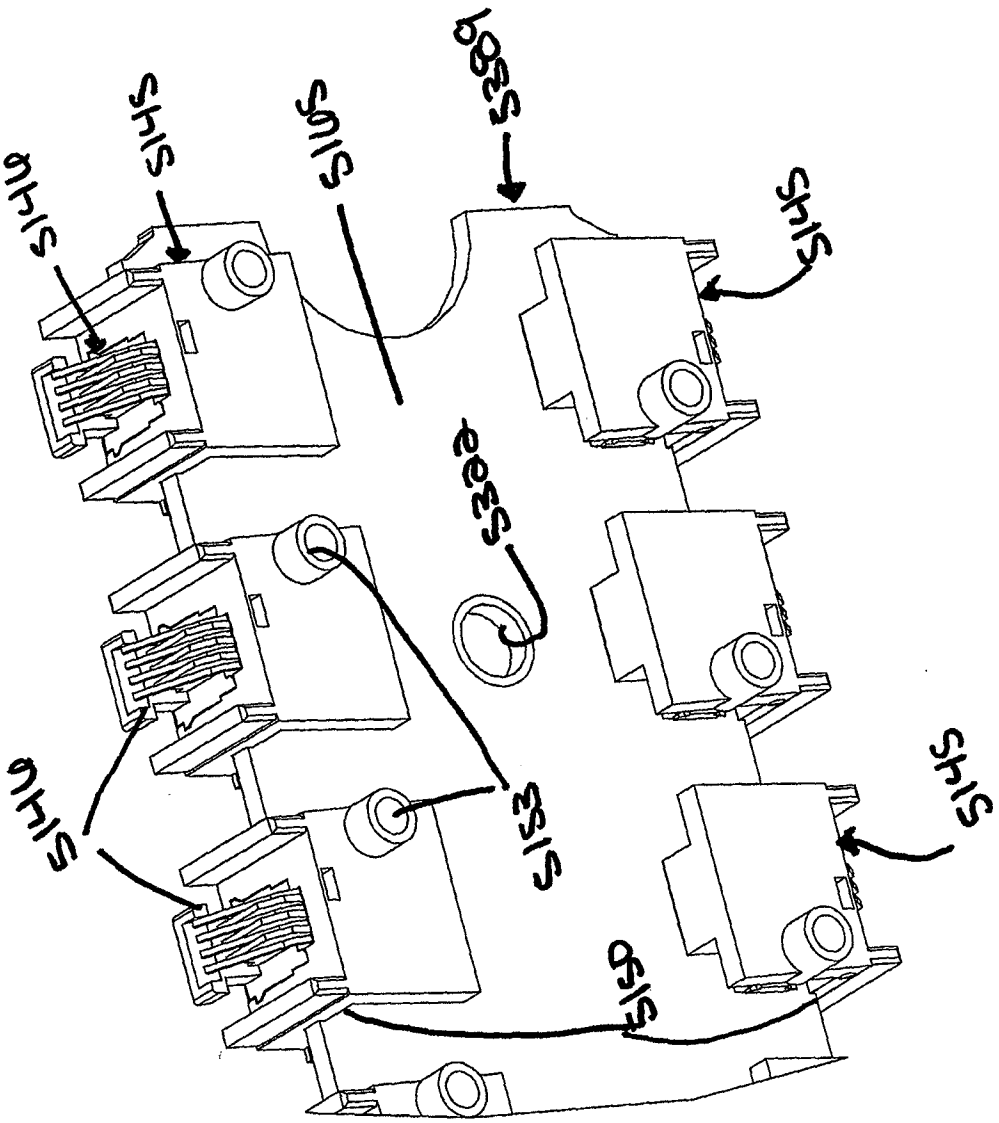
5380
5105
5105
5105

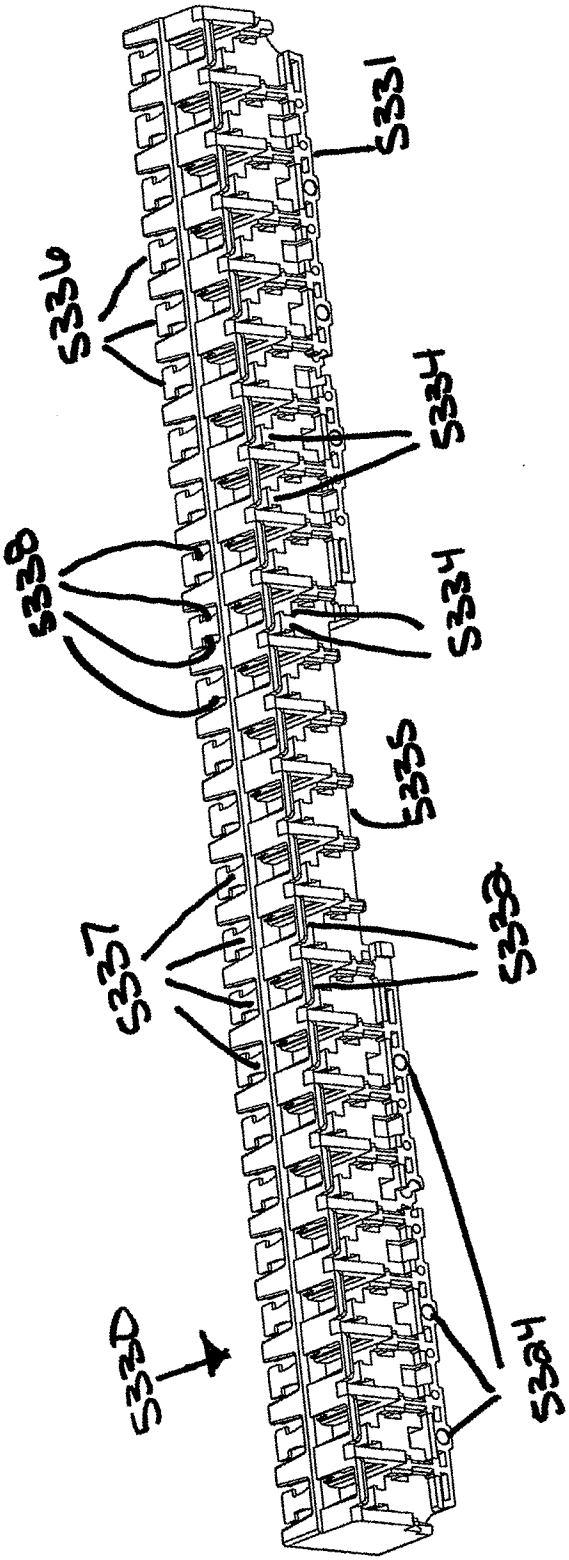

FIG. 65

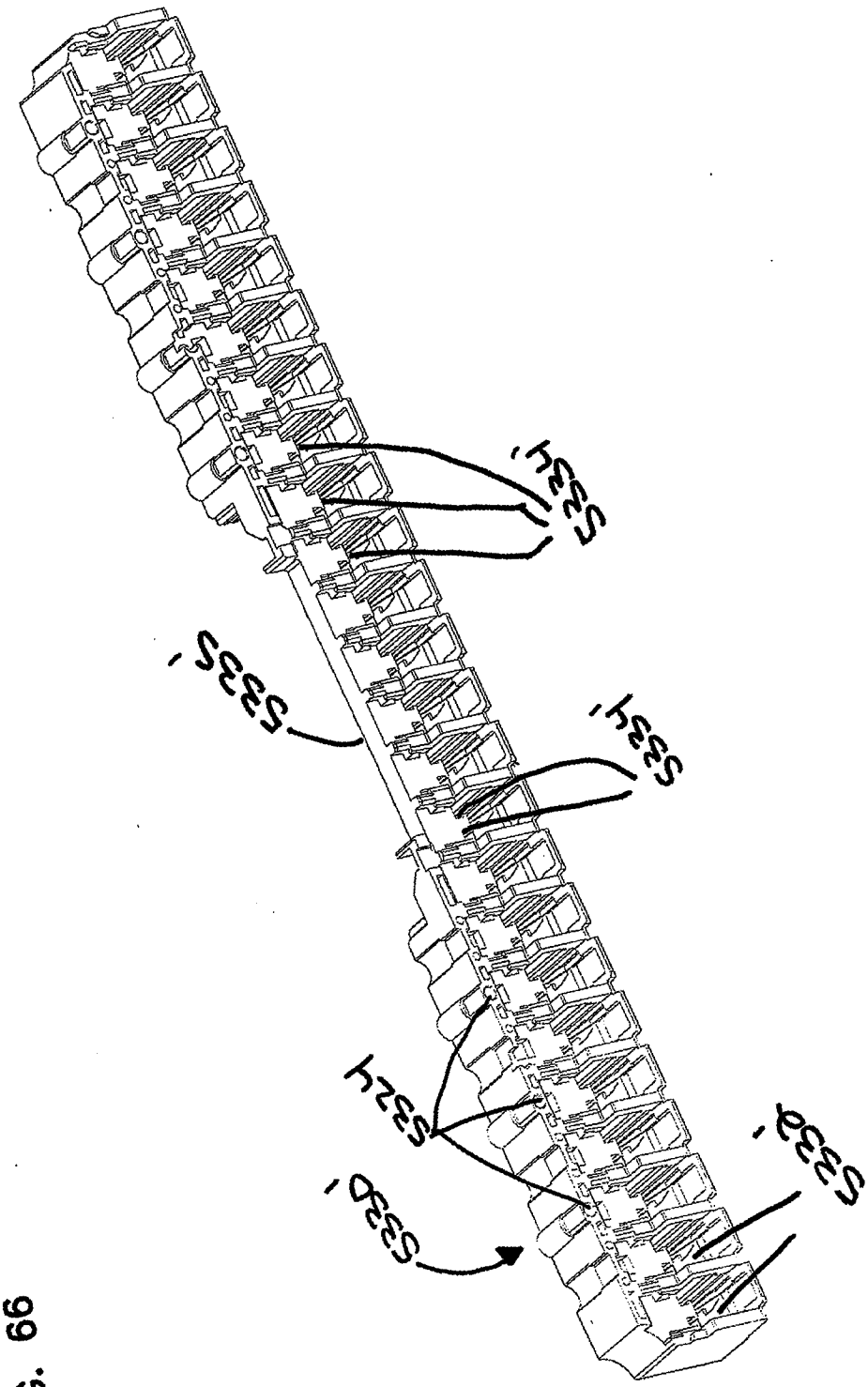

FIG. 66

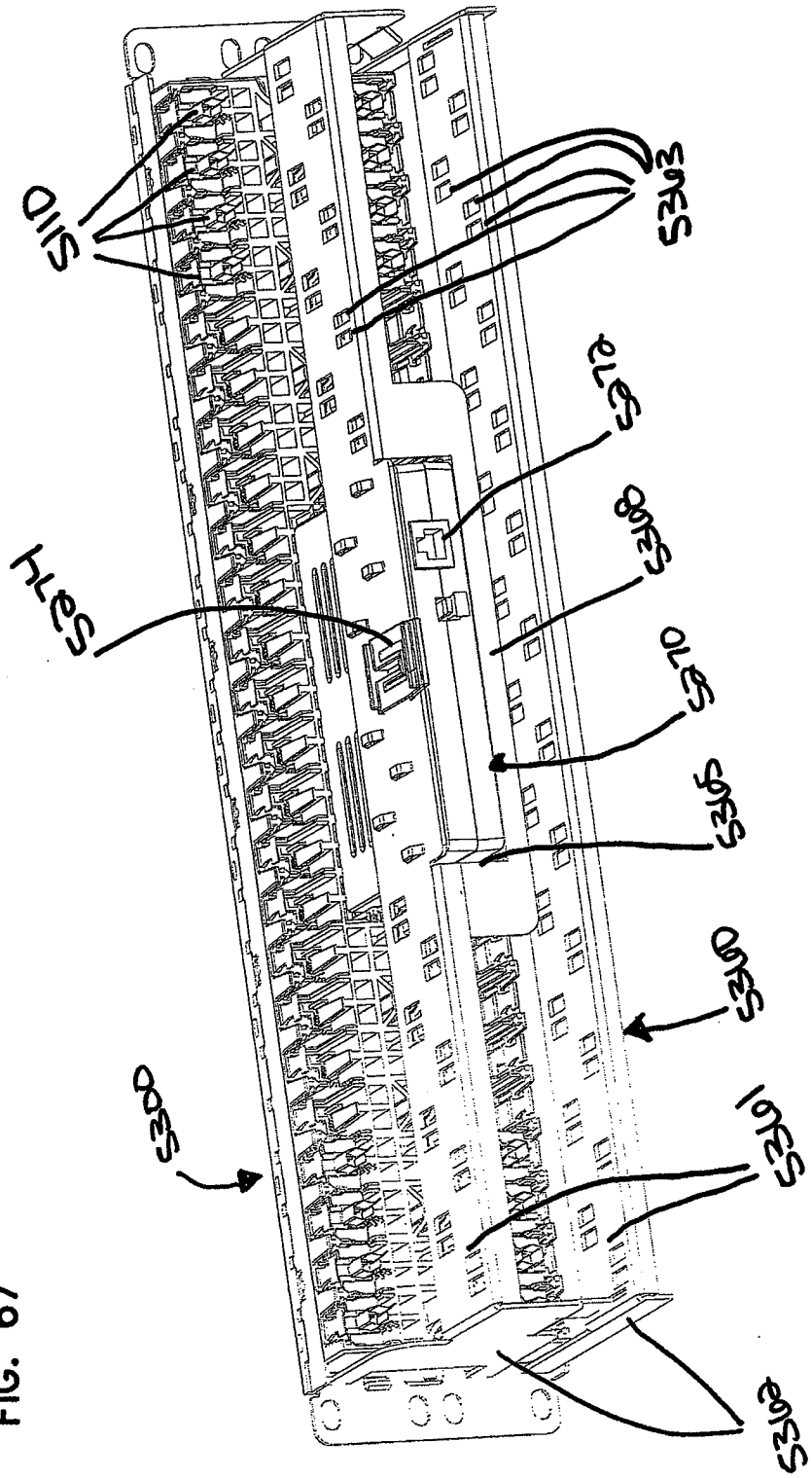

FIG. 67

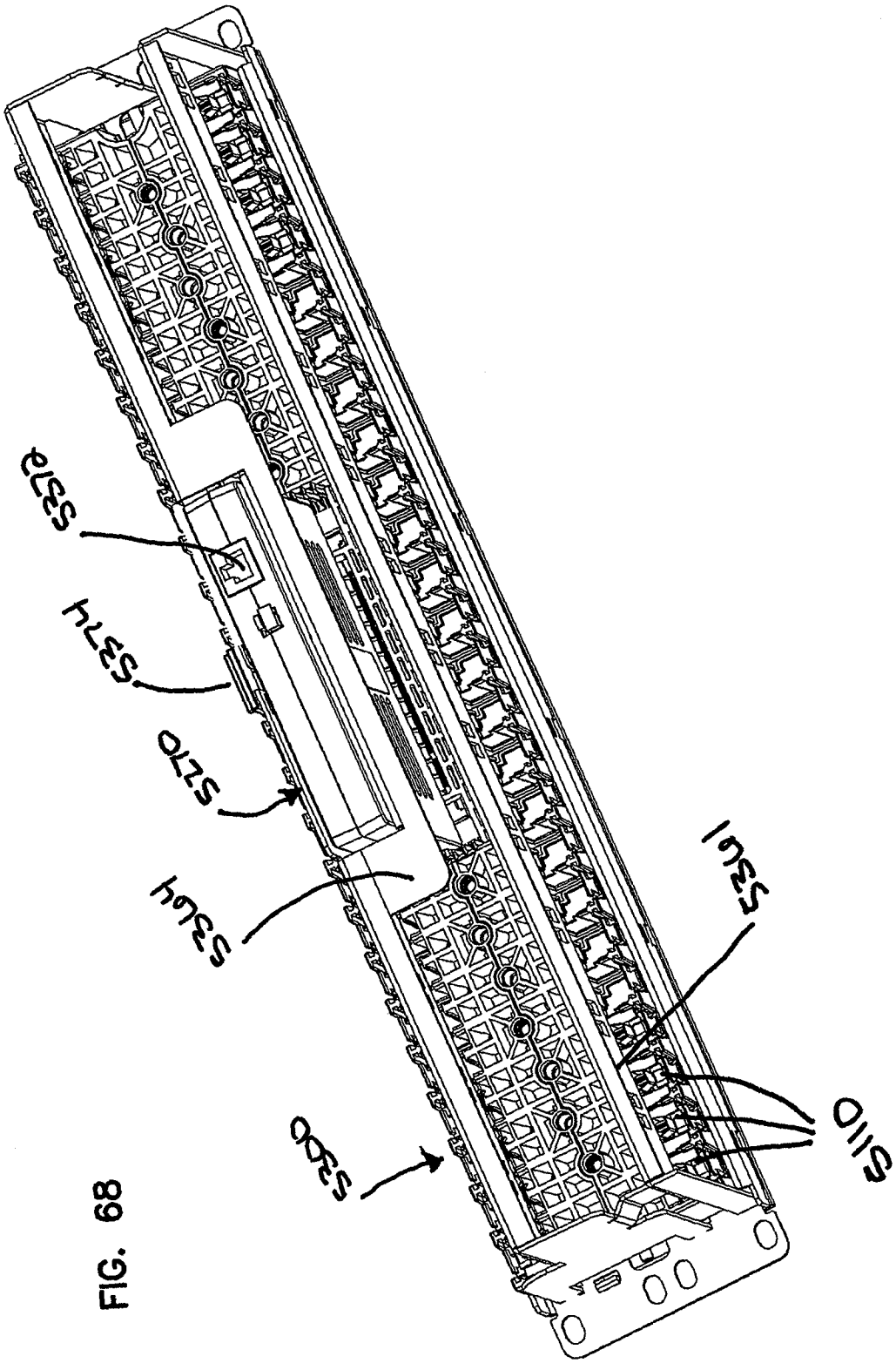

FIG. 68

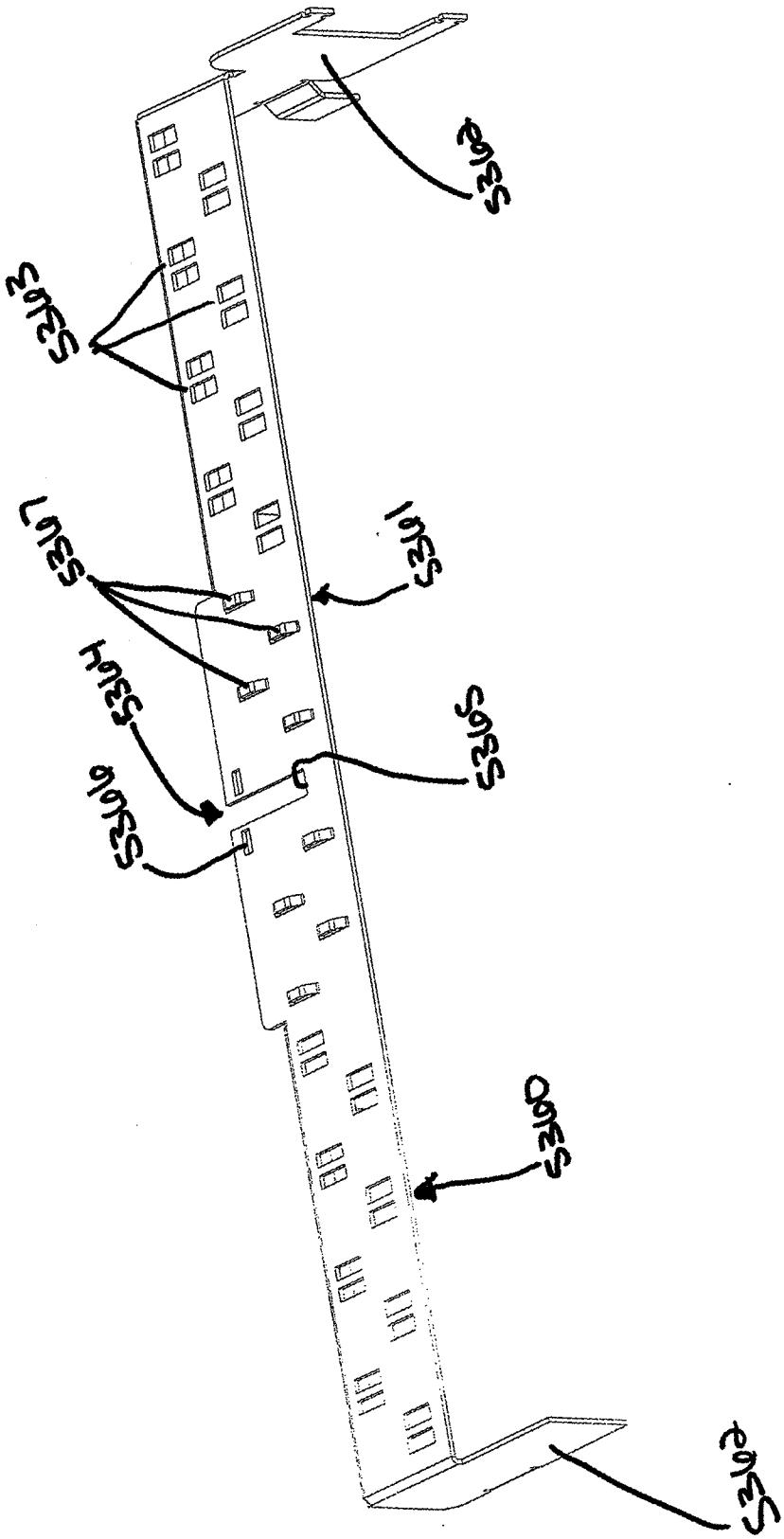

FIG. 69

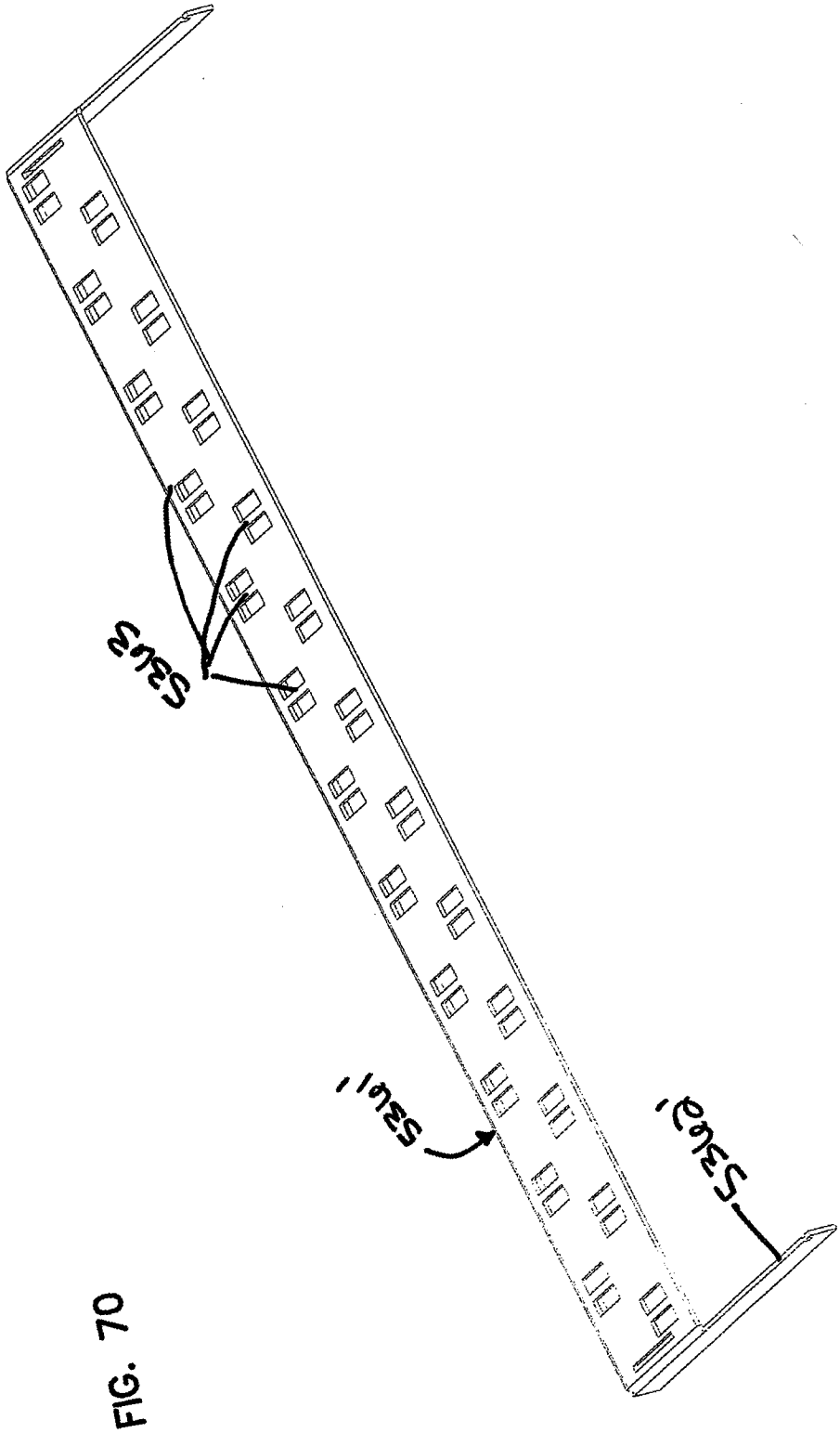

FIG. 70

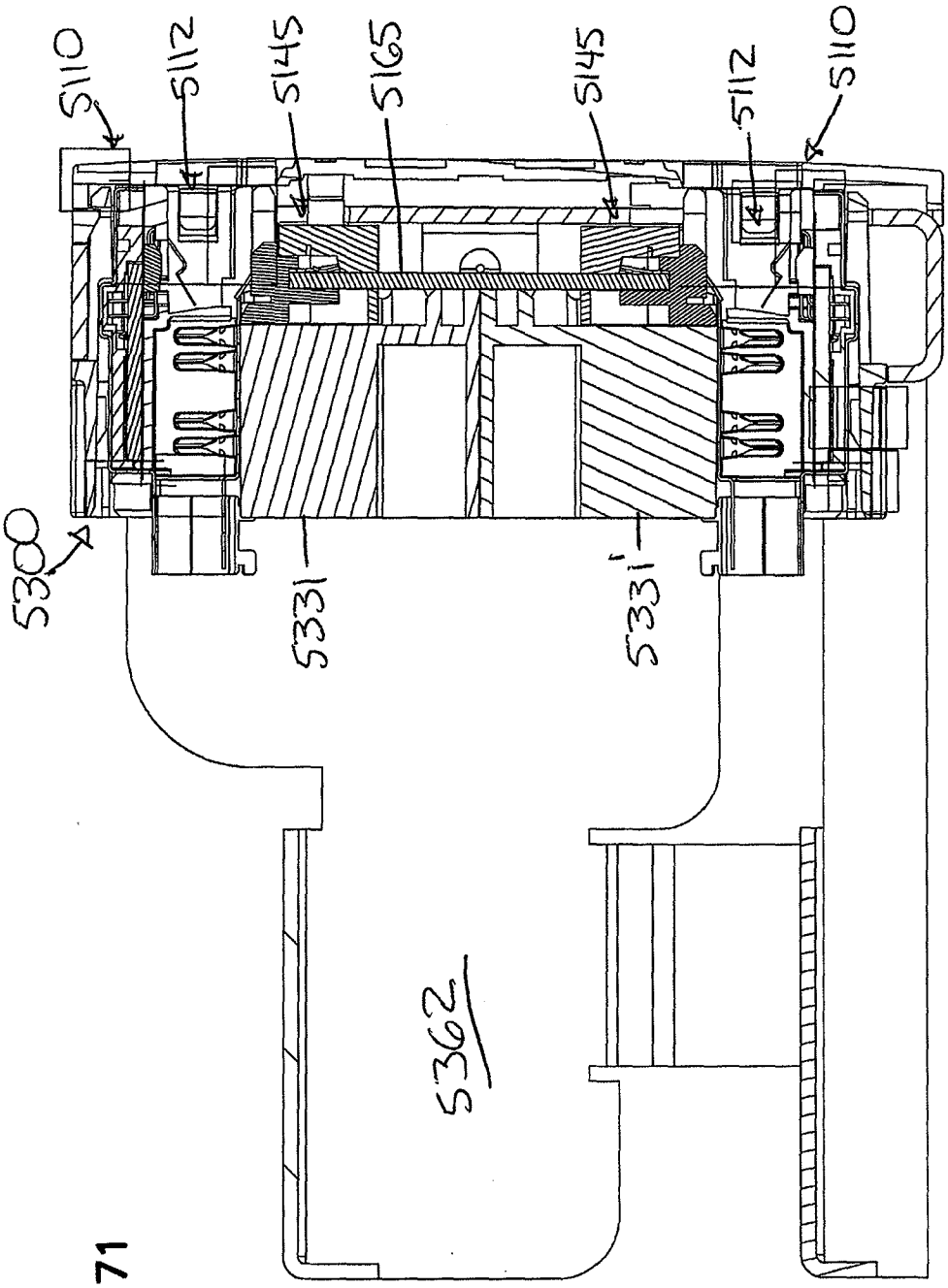

FIG. 71

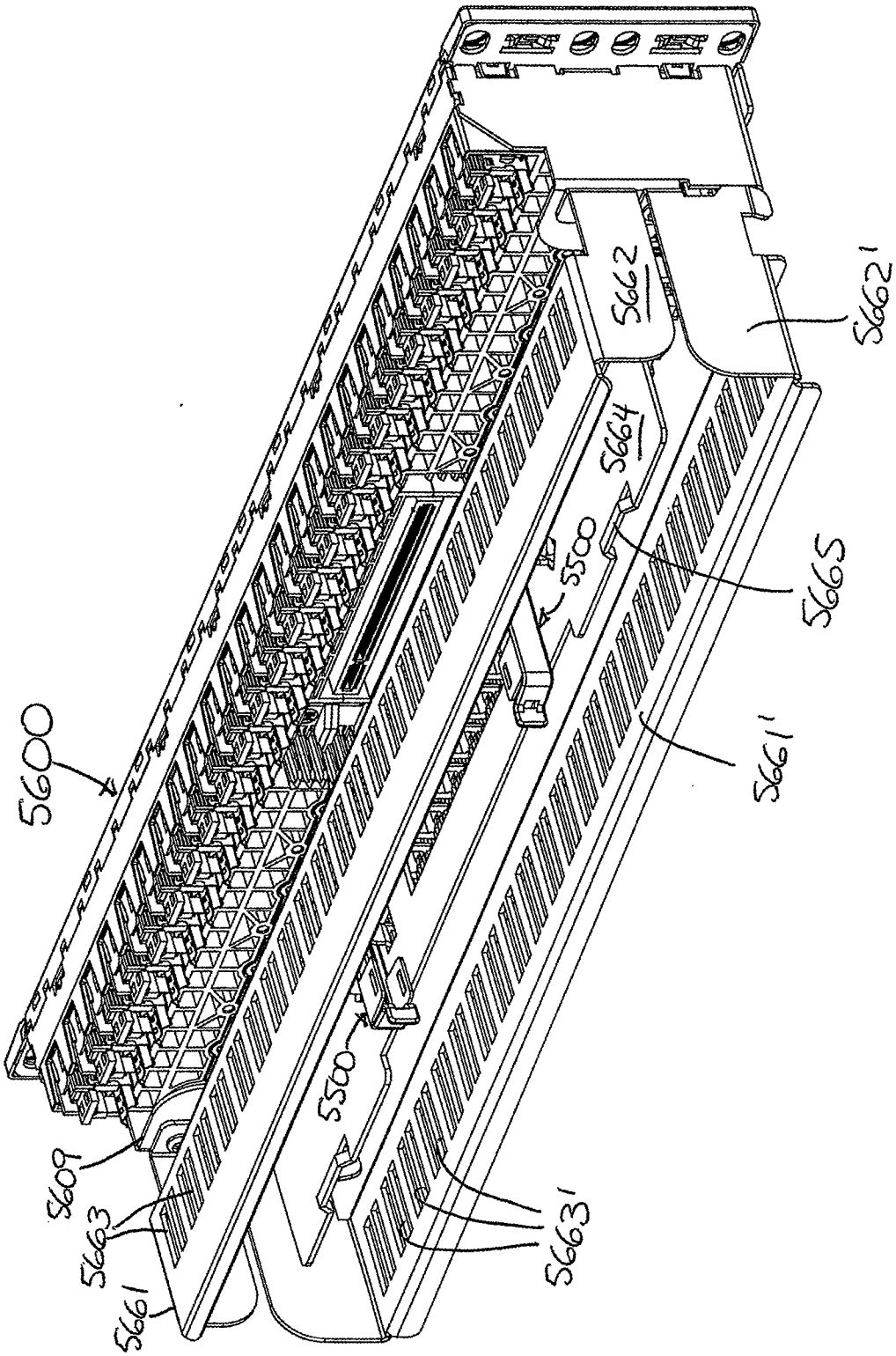

FIG. 72

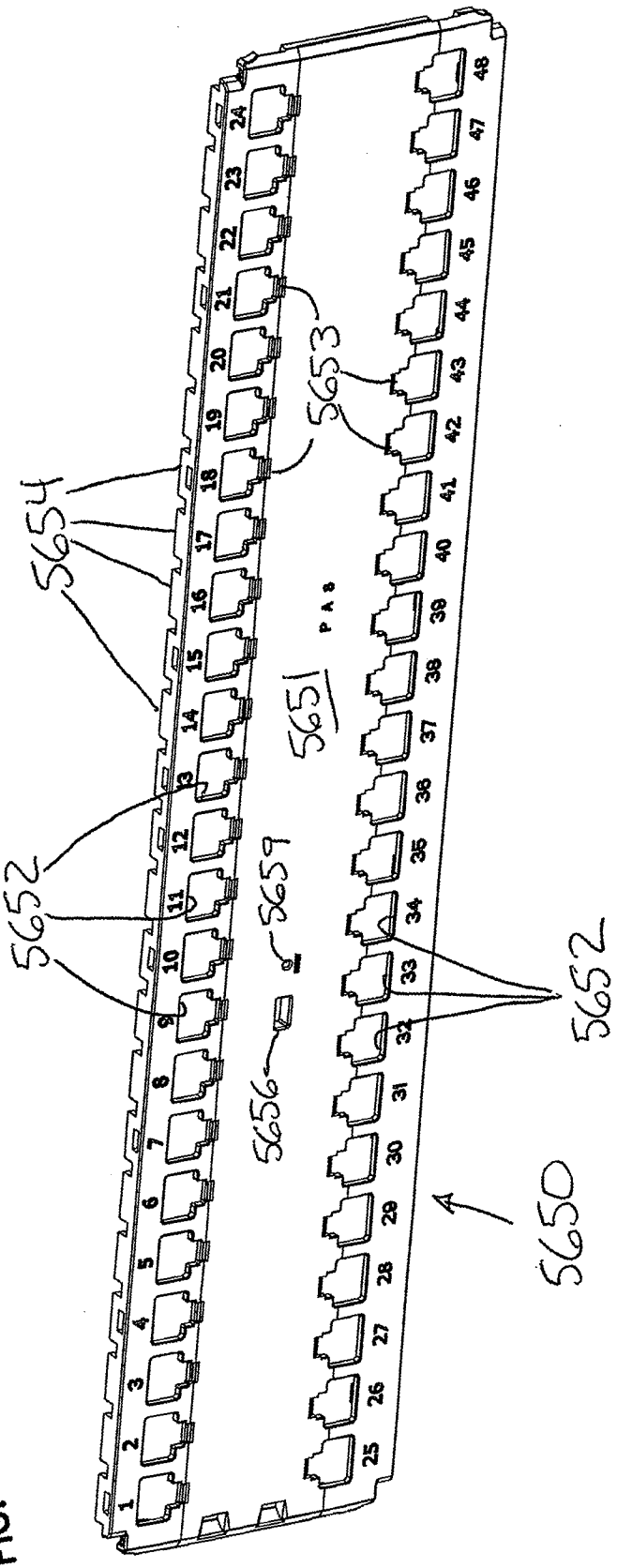

FIG. 73

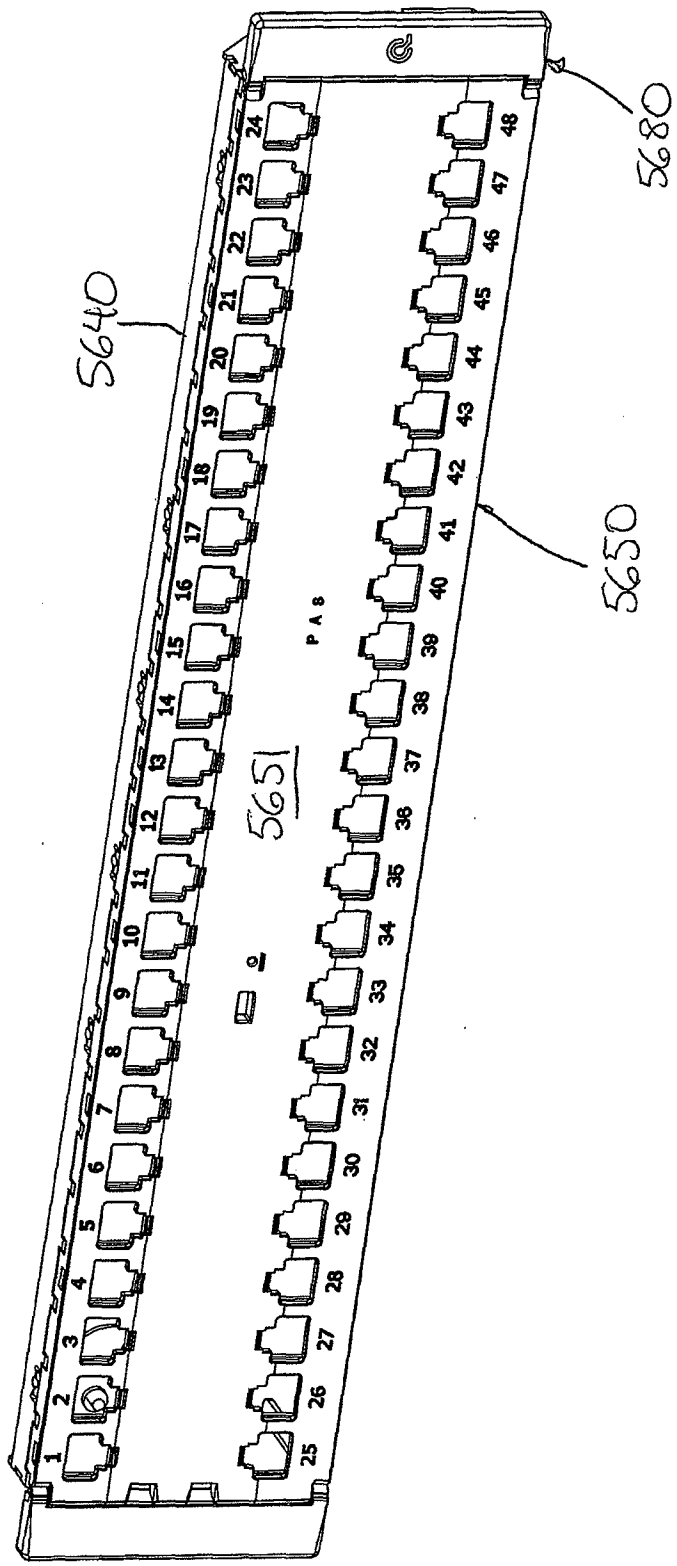

FIG. 74

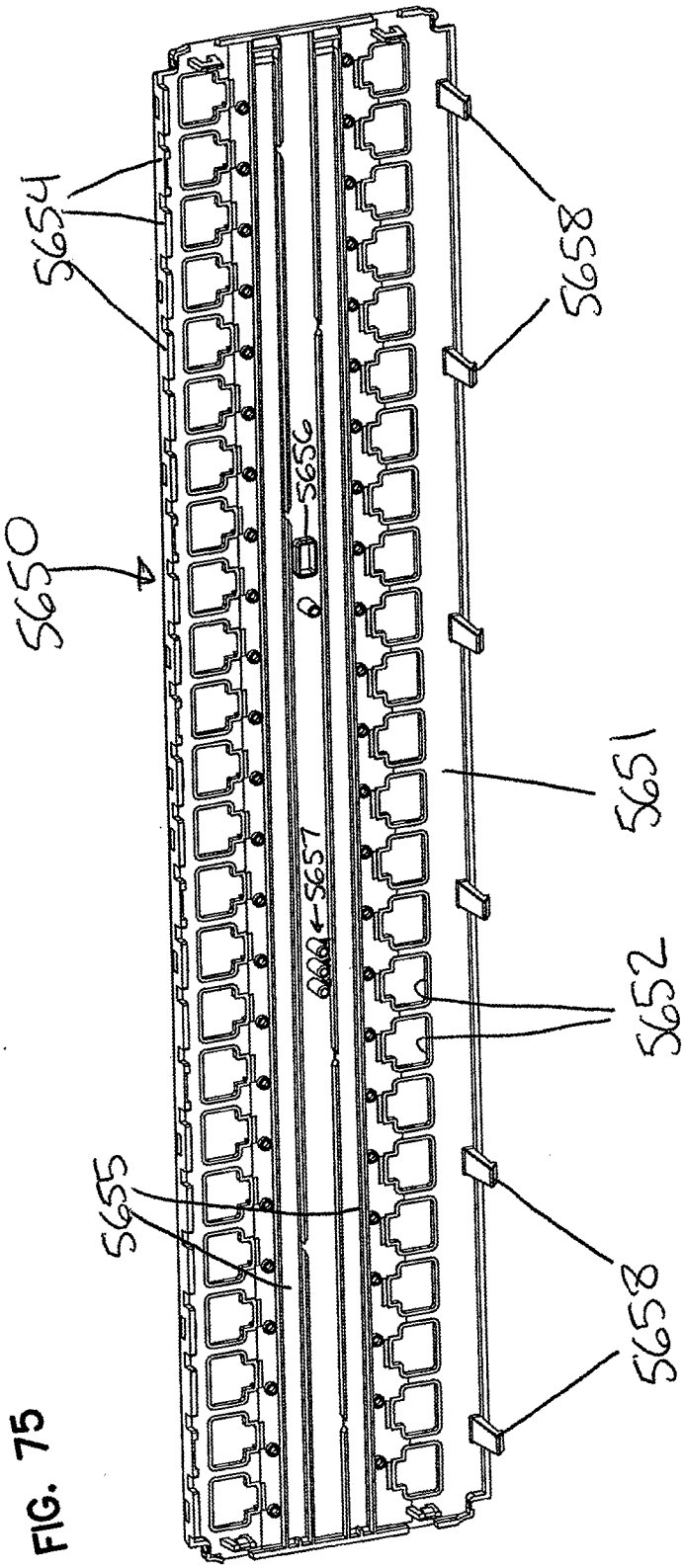

FIG. 75

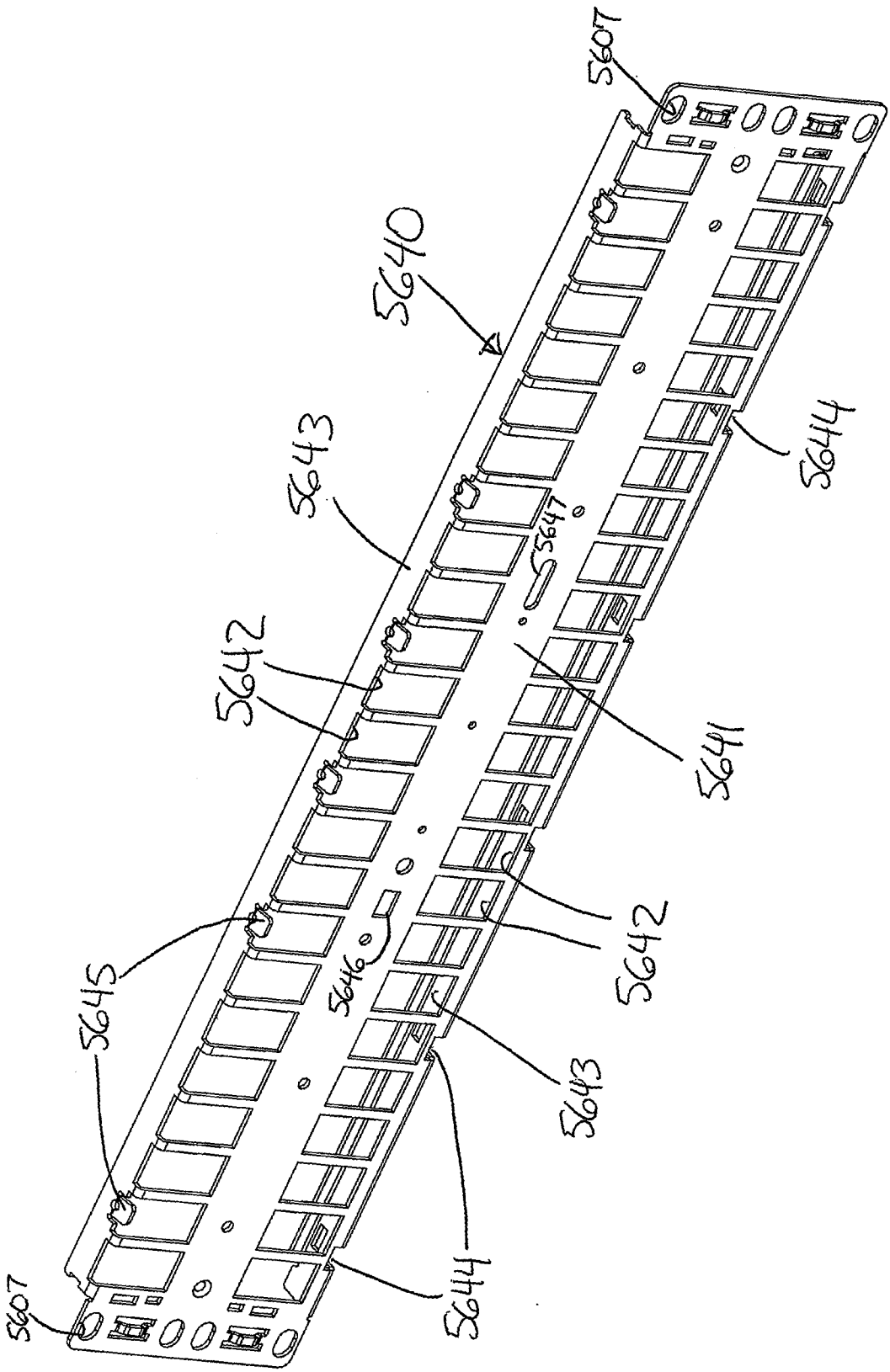
5607
5640
5643
5644
5647
5642
5641
5642
5646
5645
5643
5644
5607

FIG. 76

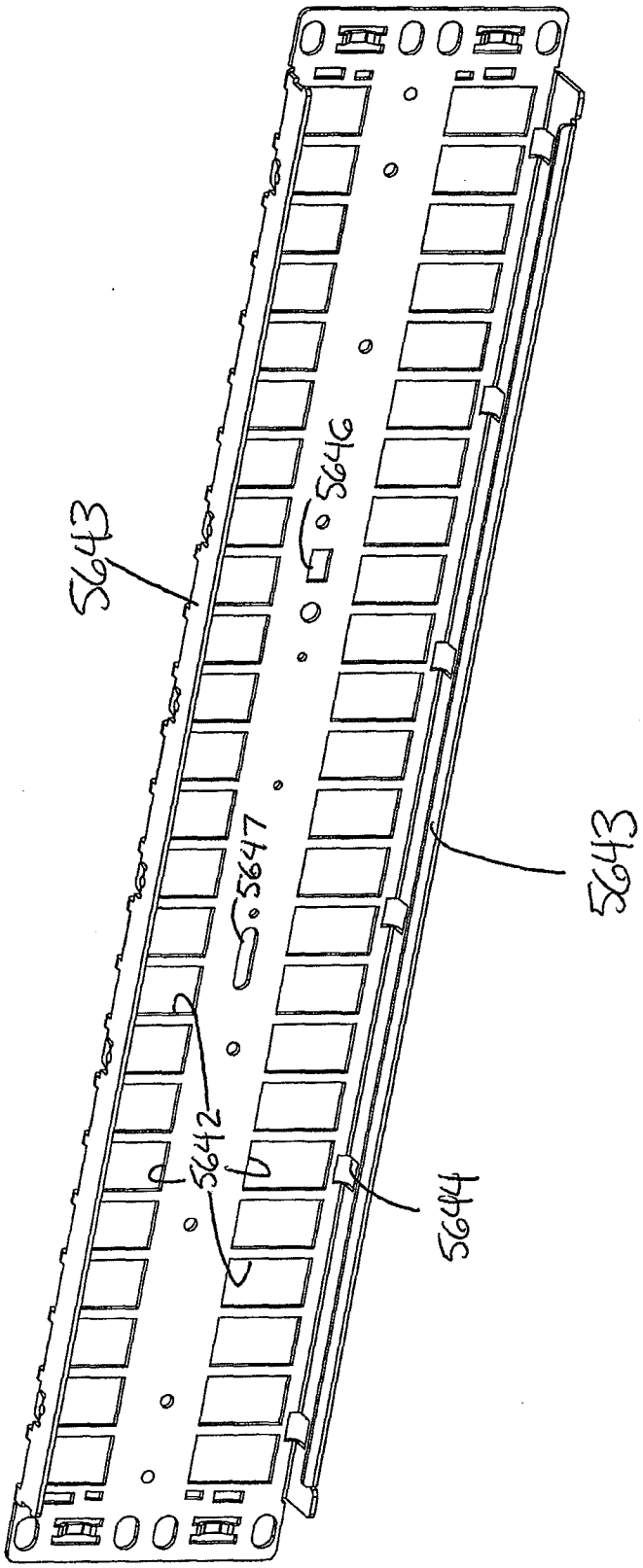

FIG. 77

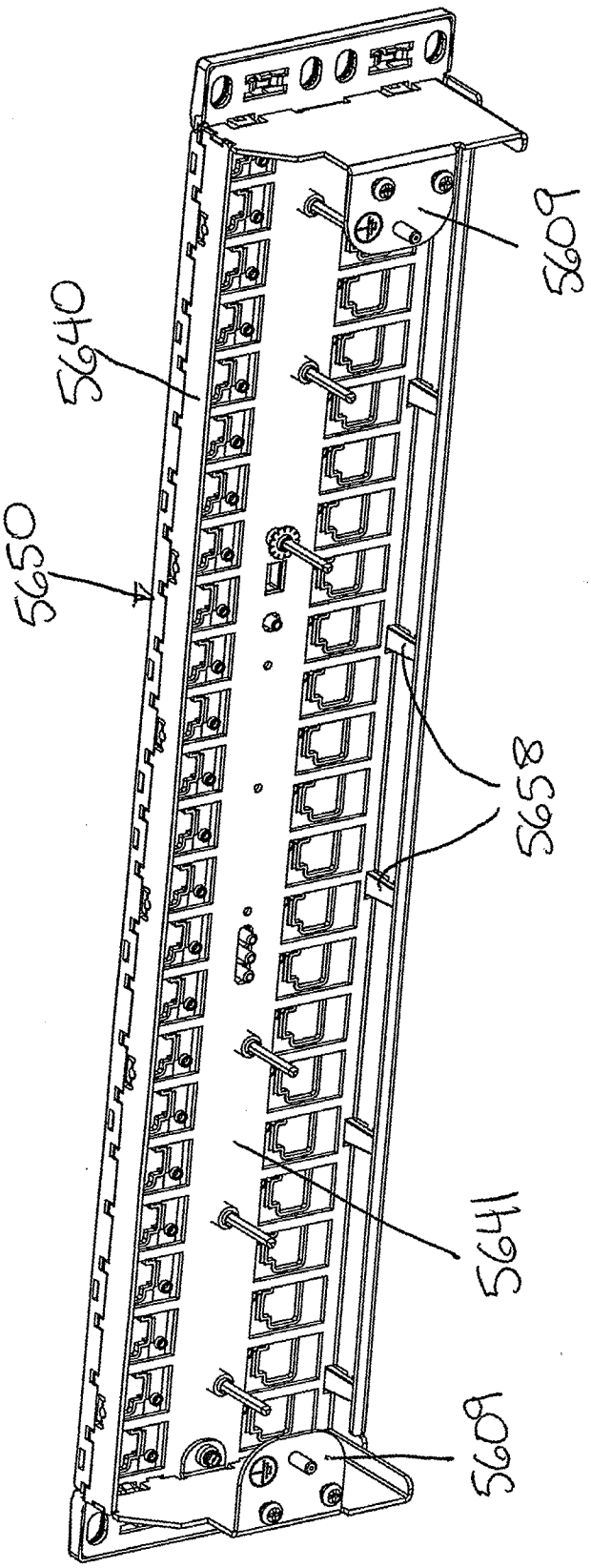

FIG. 78

INTERNATIONAL SEARCH REPORT

International application No
PCT/US2010/053228

A. CLASSIFICATION OF SUBJECT MATTER
INV. H01R13/514 H01R13/703 H01R13/436 H04Q1/06 H04Q1/14
ADD.

According to International Patent Classification (IPC) or to both national classification and IPC

B. FIELDS SEARCHED

Minimum documentation searched (classification system followed by classification symbols)
H01R H04Q

Documentation searched other than minimum documentation to the extent that such documents are included in the fields searched

Electronic data base consulted during the international search (name of data base and, where practical, search terms used)
EPO-Internal

C. DOCUMENTS CONSIDERED TO BE RELEVANT

Category*	Citation of document, with indication, where appropriate, of the relevant passages	Relevant to claim No.
X Y A	US 2008/090454 A1 (HOATH ALASTAIR [GB] ET AL HOATH ALASTAIR [GB] ET AL) 17 April 2008 (2008-04-17) figures 4,5,16,19-21	7-9 26-28 1,15,17, 30
A	US 2004/052498 A1 (COLOMBO BRUCE A [US] ET AL) 18 March 2004 (2004-03-18) figure 4A	1,15,30
A	WO 02/47215 A1 (BARKEY VOLKER [DE]; DONNERMANN JOERG [DE]; SCHLINGHEIDER THOMAS [DE];) 13 June 2002 (2002-06-13) figure 1	1,15,17, 30

-/--

[X] Further documents are listed in the continuation of Box C.

[X] See patent family annex.

* Special categories of cited documents :

"A" document defining the general state of the art which is not considered to be of particular relevance

"E" earlier document but published on or after the international filing date

"L" document which may throw doubts on priority claim(s) or which is cited to establish the publication date of another citation or other special reason (as specified)

"O" document referring to an oral disclosure, use, exhibition or other means

"P" document published prior to the international filing date but later than the priority date claimed

"T" later document published after the international filing date or priority date and not in conflict with the application but cited to understand the principle or theory underlying the invention

"X" document of particular relevance; the claimed invention cannot be considered novel or cannot be considered to involve an inventive step when the document is taken alone

"Y" document of particular relevance; the claimed invention cannot be considered to involve an inventive step when the document is combined with one or more other such documents, such combination being obvious to a person skilled in the art.

"&" document member of the same patent family

Date of the actual completion of the international search	Date of mailing of the international search report
18 March 2011	28/03/2011

Name and mailing address of the ISA/	Authorized officer
European Patent Office, P.B. 5818 Patentlaan 2 NL - 2280 HV Rijswijk Tel. (+31-70) 340-2040, Fax: (+31-70) 340-3016	Garcia Congosto, M

INTERNATIONAL SEARCH REPORT

International application No
PCT/US2010/053228

C(Continuation). DOCUMENTS CONSIDERED TO BE RELEVANT

Category*	Citation of document, with indication, where appropriate, of the relevant passages	Relevant to claim No.
X	US 6 811 446 B1 (CHANG CHIH-KAI [TW]) 2 November 2004 (2004-11-02) column 3, line 28 - line 34; figures 2,3,9	7,8,10, 11
X	US 6 280 231 B1 (NICHOLLS BRYCE LINDSAY [AU]) 28 August 2001 (2001-08-28) figures 4-5	7,10,11
X	US 4 127 317 A (TYREE CHRISTOPHER W) 28 November 1978 (1978-11-28) column 3, line 11 - line 41	12
A	WO 00/65696 A1 (WHITAKER CORP [US]; HYLAND JAMES HENRY [US]) 2 November 2000 (2000-11-02) figure 4	13
X	US 3 243 761 A (HEINZ PIORUNNECK) 29 March 1966 (1966-03-29) column 2, line 8 - line 12; figure 1	12,14
Y	WO 2008/130717 A2 (TYCO ELECTRONICS CORP [US]; HOFFER JOHN CAREY [US]; HALL KENNETH CAMER) 30 October 2008 (2008-10-30) figure 1	26-28
A	US 2002/008613 A1 (NATHAN JOHN F [US] ET AL) 24 January 2002 (2002-01-24) paragraph [0004]	29
A	US 6 612 856 B1 (MCCORMACK MICHAEL SEAN [US]) 2 September 2003 (2003-09-02) figures 1,5	29

INTERNATIONAL SEARCH REPORT

International application No.
PCT/US2010/053228

Box No. II Observations where certain claims were found unsearchable (Continuation of item 2 of first sheet)

This international search report has not been established in respect of certain claims under Article 17(2)(a) for the following reasons:

1. ☐ Claims Nos.:
because they relate to subject matter not required to be searched by this Authority, namely:

2. ☐ Claims Nos.:
because they relate to parts of the international application that do not comply with the prescribed requirements to such an extent that no meaningful international search can be carried out, specifically:

3. ☐ Claims Nos.:
because they are dependent claims and are not drafted in accordance with the second and third sentences of Rule 6.4(a).

Box No. III Observations where unity of invention is lacking (Continuation of item 3 of first sheet)

This International Searching Authority found multiple inventions in this international application, as follows:

see additional sheet

1. ☒ As all required additional search fees were timely paid by the applicant, this international search report covers all searchable claims.

2. ☐ As all searchable claims could be searched without effort justifying an additional fees, this Authority did not invite payment of additional fees.

3. ☐ As only some of the required additional search fees were timely paid by the applicant, this international search report covers only those claims for which fees were paid, specifically claims Nos.:

4. ☐ No required additional search fees were timely paid by the applicant. Consequently, this international search report is restricted to the invention first mentioned in the claims; it is covered by claims Nos.:

Remark on Protest

☐ The additional search fees were accompanied by the applicant's protest and, where applicable, the payment of a protest fee.

☐ The additional search fees were accompanied by the applicant's protest but the applicable protest fee was not paid within the time limit specified in the invitation.

☒ No protest accompanied the payment of additional search fees.

This International Searching Authority found multiple (groups of) inventions in this international application, as follows:

1. claims: 1-6, 30-36

"A connector arrangement comprising a printed circuit board positioned within the cavity of a plug nose body" and "a method of manufacturing a connector arrangement, the method comprising mounting a storage device within the cavity defined by a key member and closing the cavity with a cover member".

---

2. claims: 7-25

"A jack module comprising: a jack body defining a socket, a second end of the jack body defining a cutout region that provides access to the socket through the second end of the jack body"; "a media reading interface comprising a housing defining a channel that is configured to receive a printed circuit board, the contact members having first sections that extend outwardly from the housing and second sections that extend into the channel"; "a connector assembly comprising a jack module also defining a cutout region at the bottom of the jack module; and a media reading interface housing having a top, a bottom, a front, a rear, a first side, and a second side, the media reading interface housing defining a channel configured to receive a printed circuit board"; and "a patch panel comprising: a fascia including a fascia body mounted to the first side of the frame body, the fascia body defining a plurality of openings, each opening being aligned with one of the openings of the frame body; and a plurality of media reading interfaces mounted to the printed circuit board, each media reading interface being connected to one of the jack modules mounted to the chassis body, and each media reading interface including a second plurality of contacts that extend into the respective jack module".

---

3. claims: 26-28

"A cable manager comprising a first rail defining a plurality of slots".

---

4. claim: 29

"A method of determining that a connector arrangement has been received within a connector assembly, the connector assembly also including a shorting pin extending across at least a first and second of the flexible secondary contacts, the method comprising: applying a signal to at least the first secondary contact prior to inserting the connector arrangement into the connector assembly; determining that

the second secondary contact is shorted to the first secondary contact; inserting the connector arrangement into the connector assembly including moving the flexible secondary contacts away from the shorting pin; applying another signal to at least the first secondary contact; and determining that the second secondary contact is not shorted to the first secondary contact".

INTERNATIONAL SEARCH REPORT

Information on patent family members

International application No
PCT/US2010/053228

Patent document cited in search report	Publication date	Patent family member(s)	Publication date
US 2008090454 A1	17-04-2008	AT 491310 T	15-12-2010
		AU 2007308182 A1	17-04-2008
		EP 2078426 A1	15-07-2009
		US 2009215310 A1	27-08-2009
		US 2010184324 A1	22-07-2010
		WO 2008045512 A1	17-04-2008
US 2004052498 A1	18-03-2004	NONE	
WO 0247215 A1	13-06-2002	AU 1708602 A	18-06-2002
		DE 10060970 A1	27-06-2002
US 6811446 B1	02-11-2004	NONE	
US 6280231 B1	28-08-2001	EP 0975049 A1	26-01-2000
		ID 23616 A	04-05-2000
		JP 2000048888 A	18-02-2000
		NZ 336562 A	23-06-2000
		TR 9901764 A2	21-06-2000
		UY 25603 A1	23-02-2000
US 4127317 A	28-11-1978	AU 503549 B2	06-09-1979
		AU 1563776 A	12-01-1978
		BR 7704218 A	16-05-1978
		CA 1084133 A1	19-08-1980
		DE 2730127 A1	19-01-1978
		FR 2358077 A1	03-02-1978
		GB 1590423 A	03-06-1981
		IN 147344 A1	09-02-1980
		JP 53025888 A	10-03-1978
WO 0065696 A1	02-11-2000	AU 4669700 A	10-11-2000
US 3243761 A	29-03-1966	BE 654064 A	07-04-1965
		CH 432615 A	31-03-1967
		DE 1465319 A1	11-09-1969
		FR 1410676 A	13-12-1965
		GB 1022298 A	09-03-1966
		NL 6411581 A	09-04-1965
WO 2008130717 A2	30-10-2008	CN 101669413 A	10-03-2010
		EP 2149287 A2	03-02-2010
US 2002008613 A1	24-01-2002	NONE	
US 6612856 B1	02-09-2003	NONE	