Jan. 12, 1965 A. LABOWSKY 3,164,933

GRINDING WHEEL

Filed Aug. 28, 1962

Fig. 1.

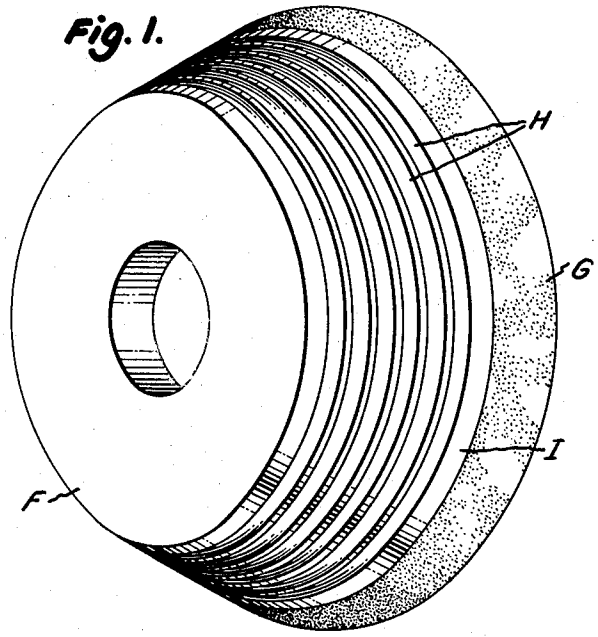

Fig. 2.

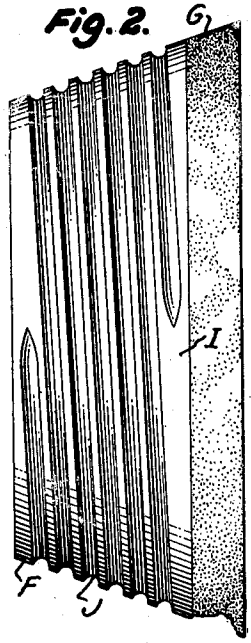

Fig. 3.

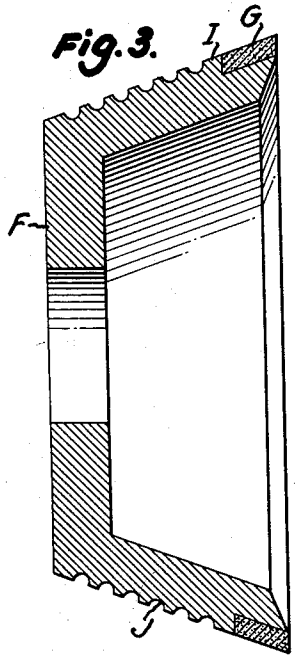

INVENTOR

Andrew Labowsky

BY Edwin C. Grelecki

ATTORNEY

United States Patent Office 3,164,933 Patented Jan. 12, 1965

3,164,933

GRINDING WHEEL

Andrew Labowsky, 144 Emeline Drive, Hawthorne, N.J.

Filed Aug. 28, 1962, Ser. No. 219,902
1 Claim. (Cl. 51—209)

This invention relates to improvements in bonded diamond grinding wheels, and, more particularly, to the concept of increasing the surface area of the core body to which it is secured in such a manner as to substantially lengthen the life of the grinding surface by improving the cooling thereof.

Heretofore, many and varied efforts have been made to control the flow of air over the body of different types of grinding wheels as well as to attempt to direct air toward the cutting edge thereof to achieve a longer life for the grinding wheel. By way of example, it is known in the prior art to employ carbon dioxide gas as the cooling medium, this gas being directed against the cutting edge from a suitable supply source by any convenient nozzle means.

To employ fan blades on a grinding wheel for the purpose of cooling the work contact face thereof is also known in the prior art. A more specific example of such an arrangement is that shown and described in Thomas Patent No. 2,746,220, issued May 22, 1956. In this patent, there is disclosed an arrangment in which a series of blades are spacedly and fixedly secured to the surface of a grinding wheel which is provided with a frusto-conical supporting body. In this teaching, the blades are of such a configuration as to direct the flow of air through apertures provided beneath the cutting face directly to the work being ground. To some degree it is suspected that this device has merit and utility, but as in all designs that have preceded the present concept, it also has drawbacks. The mere application of fan blades, in any form whatsoever, to the surface area of a grinding wheel will tend to reduce the efficiency of that particular wheel. By way of elucidation, grinding wheels of the type which include fan blades as a cooling means will of necessity operate at a reduced peripheral speed which will result in excessive wear. Furthermore, unless extreme care is used in constructing the wheel, whereby it is perfectly balanced, damage will be caused to the shaft on which the grinding wheel is revolubly supported. It is, moreover, apparent that the use of fan blades as the cooling means for such grinding wheels will also be a safety hazard not only to the operator, who could be seriously injured, but also to the work which could be irreparably damaged.

Accordingly, it is the primary object of the invention to construct a rotary grinding tool having a body portion and a cutting surface, the greater proportion of said body portion being provided with heat-dissipating means.

It is a further object of the invention to provide recessed or channeled areas in the periphery of a grinding wheel thus increasing the area thereof for contact with surrounding atmosphere air.

Still another object of the invention is to provide a grinding wheel which is economical to manufacture with readily available tools and machinery.

These and other objects and advantages will be clearly understood with reference to the embodiments illustrated in the accompanying drawing employing similar reference numerals to identify the same elements in each of the similar views, and in which:

FIG. 1 is a perspective view of a frusto-conical grinding wheel incorporating the invention therein;

FIG. 2 is an elevational view of a grinding wheel incorporating one form of channel, illustrated as a spiral;

FIG. 3 is a sectional view of the grinding wheel shown in FIG. 2.

With reference to FIG. 1, there is disclosed a frusto-conical grinding wheel including a trailing edge F of well-known design to the leading edge which is suitably secured in a known manner, a resinoid bonded diamond concentrate grinding element, indicated by the reference character G. Although as illustrated in the drawing the grinding wheel is frusto-conical in configuration, this is not to be considered as restrictive of the inventive concept, but merely representative of any type of grinding wheel which has a core body of sufficient area to be adapted for receiving the improvement contemplated and disclosed herein.

Further, with regard to FIG. 1, there is shown in this perspective view a parallel spaced array of channels or recesses H which serve to reveal or expose the surface area of the core body I of the grinding wheel F, thus enabling air to contact a greatly increased area thereof.

In the elevational view of the embodiment of the invention shown in FIG. 2, the recessed area in the core body I of the grinding wheel F assumes the form of a continuous and uninterrupted spiral J. This type of groove, as well as the others discussed herein, can be readily achieved on any conventional lathe or ground into the core body on any convenient grinder. Where desired or preferred by the manufacturer, the recesses or grooves may be molded into the core body. In the embodiment of the invention shown in FIG. 2, the grooves are clearly shown as U-shaped, this arrangement substantially increasing the cooling surface area on the periphery of the grinding wheel by 50%–60%.

During tests that have been conducted for the purpose of evaluating this improvement, the results of which are set forth hereinafter, it was determined that there was such a substantial increase in efficiency that, whereas standard grinding wheels could not be handled after use with bare hands, those which were prepared by the teaching of this invention had achieved heat dissipation to a degree that made it possible for them to be handled with bare hands.

The tests referred to above were conducted with the type of grinding wheel shown in the drawing and all operating conditions were maintained constant with the only variable being in the "grooves" applied to the grinding wheel. In the tests three (3) grinding wheels were chosen with the conventional or standard core design and dry tests were run on ¾" square tungsten carbide until a total of 0.125" was removed with each wheel and then an accurate measurement was made to determine the amount of each grinding wheel that had been consumed. Subsequently, these same three (3) grinding wheels were grooved in the manner discussed herein and the tests repeated under the exact same conditions with the following results:

Wheel No.	Test No.	No Grooves, inch	Grooves, inch	Increase Efficiency, Percent
A	1	.0063	.0035	
	2	.0072	.0045	40-100
	3		.0044	
B	1	.0083	.0048	81
	2		.0048	
C	1	.0082	.0045	82

Thus, in view of the foregoing, it is apparent that the application of grooves to the grinding wheel as taught by this invention increases its efficiency markedly over the teachings of the prior art.

Although several embodiments of the invention have been depicted and described, it will be apparent that these embodiments are illustrative in nature and that a number of modifications in the apparatus and variations in its end use may be effected without departing from the spirit

or scope of the invention as defined in the appended claim.

I claim:

In a rotary grinding tool, a frusto-conical body having a leading edge and a trailing edge the leading edge including an annularly channeled area, an abrasive material positioned in said channeled area with the outer surface of the abrasive material forming a continuation of the body and extending beyond the leading edge thereof and heat dissipating continuous spiral groove means extending substantially from the trailing edge of the body and terminating at a point substantially adjacent to the channeled area confining said abrasive material.

References Cited by the Examiner

UNITED STATES PATENTS

2,307,312	1/43	Whiting	51—209
2,746,220	5/56	Thomas	51—266
2,800,754	7/57	Robertson	51—209
3,016,662	1/62	Ellis	51—209
3,110,985	11/63	Brauchle	51—266
3,117,400	1/64	Martin	51—209

LESTER M. SWINGLE, *Primary Examiner.*

FRANK H. BRONAUGH, J. SPENCER OVERHOLSER, *Examiners.*