Feb. 2, 1943. A. NEUHART 2,309,662

SHEET HANDLING APPARATUS

Filed May 15, 1941

Fig. 1.

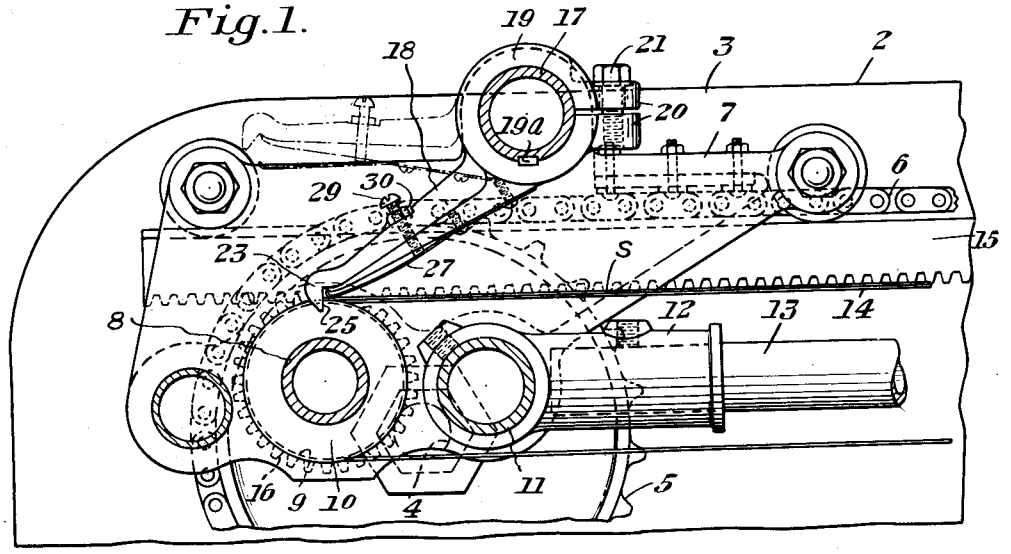

Fig. 2.

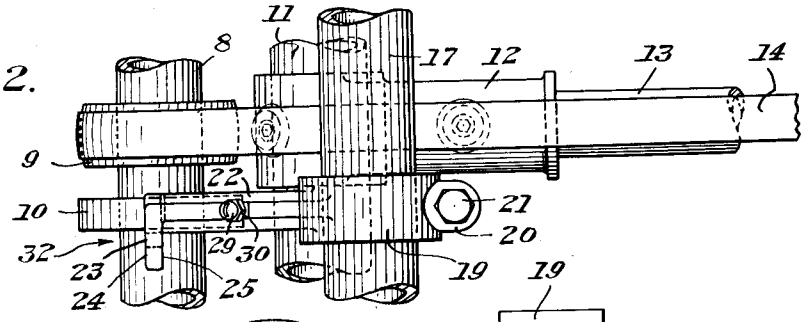

Fig. 3.

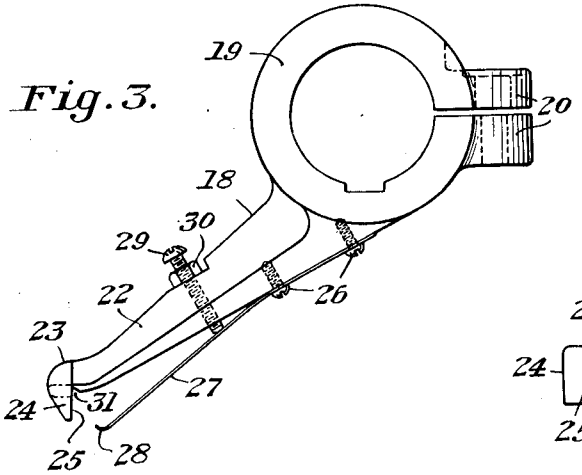

Fig. 4.

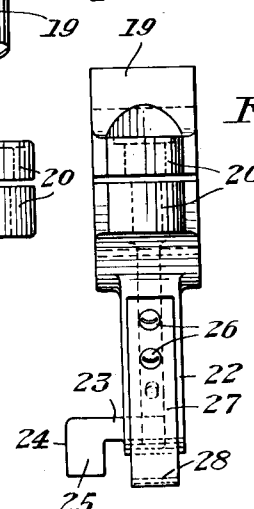

INVENTOR
Andrew Neuhart

by Gallinson and Blanco
his attorneys

Patented Feb. 2, 1943 2,309,662

UNITED STATES PATENT OFFICE

2,309,662

SHEET HANDLING APPARATUS

Andrew Neuhart, Pittsburgh, Pa., assignor to Miller Printing Machinery Co., Pittsburgh, Pa., a corporation of Pennsylvania

Application May 15, 1941, Serial No. 393,555

20 Claims. (Cl. 271—50)

This invention relates to sheet handling apparatus and more particularly to apparatus for handling sheets sequentially as in moving them from one point to another. The invention is concerned primarily with the holding of the sheets during handling and with a novel sheet gripper.

For purposes of explanation and illustration the invention will be described as embodied in a sheet delivery apparatus for delivering sheets sequentially from a printing press or other instrumentality acting upon the sheets one after the other to a delivery point, such, for example, as a pile. It is to be understood, however, that the invention is applicable to the gripping and handling of sheets in various other types of apparatus. On the other hand, the invention is in certain of its aspects peculiarly adaptable for use in sheet delivery apparatus and especially sheet delivery apparatus employing a reciprocable carrier upon which a sheet is moved from the receiving point to the delivery point in each cycle.

In sheet handling apparatus employing a reciprocable or oscillatable carrier means are provided for holding a sheet on the carrier during each forword or advancing movement thereof. Such means are known in the art as grippers. The grippers press the sheet against the carrier to hold the sheet while the carrier advances and then are released to permit delivery of the sheet. Difficulty has been experienced both in properly holding the sheets on oscillatable carriers and in insuring proper positioning of the sheets on the carriers so as to provide for delivery thereof at the proper point and in the proper position. This has been especially true in high speed operation.

I provide sheet handling aparatus having sheet positioning and holding means properly positioning and holding each sheet during operation of the apparatus and insuring delivery of the sheets at the proper point and in the proper position. I also provide an improved gripper for positioning and holding sheets. The gripper is particularly applicable to sheet handling apparatus of the type above referred to but may be otherwise employed. Preferably the gripper has a sheet positioning portion adapted to engage an edge of a sheet to position the same on the carrier and a sheet holding portion adapted to press the sheet against the carrier. The sheet holding portion is preferably resilient. I find it desirable to fasten the two portions together, preferably adjustably, so that they move together to and from operative position. The positioning means is preferably offset laterally from the holding means.

Other details, objects and advantages of the invention will become apparent as the following description of a present preferred embodiment thereof proceeds.

In the accompanying drawing I have shown a present preferred embodiment of the invention, in which

Figure 1 is a vertical longitudinal cross-sectional view through a portion of a sheet handling apparatus;

Figure 2 is a fragmentary plan view showing a portion of the structure shown in Figure 1;

Figure 3 is a side elevational view of a gripper; and

Figure 4 is an edge elevational view of the gripper shown in Figure 3 and as viewed from the right-hand side of that figure.

Referring now more particularly to the drawing, there is shown in Figures 1 and 2 a delivery apparatus designated generally by reference numeral 2 which except for the holding and positioning means for the sheets may be of any preferred construction. The apparatus comprises a pair of side frames 3, only one of which is shown in Figure 1. Each side frame carries a stud 4 rotatably supporting a sprocket 5. A sprocket chain 6 meshes with each of the sprockets 5 and one of a pair of aligned sprockets (not shown). The sprocket chains are driven in unison in oscillatory movement. Connected with the sprocket chains and bridging the space therebetween intermediate the side frames 3 is a carrier designated generally by reference numeral 7. The carrier oscillates back and forth in the right and left direction, viewing Figure 1, and is adapted to deliver a sheet in its forward or advancing movement from right to left upon each cycle of operation.

The carrier has a cross shaft 8 carrying a plurality of spaced tape supporting rollers 9 and also a plurality of spaced rollers 10 intermediate the tape supporting rollers and whose purpose will presently be described. The carrier also has a tubular cross bar 11 carrying a plurality of spaced brackets 12 each carrying a roller support 13 having at its extremity a roller (not shown) in alignment with one of the rollers 9. An endless tape 14 passes about each aligned pair of rollers, as shown in Figure 2.

One of the side frames 3 carries at its inner surface a stationary rack 15 whose teeth extend downwardly, as shown in Figure 1. The shaft 8 carries a pinion 16 which is always in mesh with

the rack 15. The pinion 16 is connected with the shaft 8 through a free wheeling clutch or other device operating in such manner that the pinion may turn freely in one direction without turning the shaft 8 but upon turning in the opposite direction drives the shaft 8 therewith. As the carrier 7 moves toward the left, viewing Figure 1, the pinion 16 turns idly upon the shaft 8 and does not rotate such shaft. When, however, the carrier moves toward the right, the clutch engages and the pinion 16 drives the shaft 8. This results in movement of the tapes 14 relatively to their supporting rollers and in the counter-clockwise direction about the axis of the shaft 8. The parts are so constructed and arranged that such movement of the tapes 14 is at the same linear velocity as the translatory movement of the carrier 7. Therefore, upon each movement of the carrier 7 toward the right the upper reaches of the tapes 14 remain substantially stationary relatively to the side frames 3.

Upon each movement of the carrier toward the left, viewing Figure 1, a sheet lies upon the tapes 14 which do not at such time partake of endwise movement relatively to their supporting rollers but move bodily. As the carrier reaches its extreme left-hand position the sheet carried thereby is brought to rest and the carrier then in effect rolls out from beneath the sheet since as the carrier moves toward the right the upper reaches of the tapes 14 move toward the left relatively to the carrier at the same speed as the speed of movement of the carrier.

The carrier has a transverse gripper shaft 17 which is periodically oscillated to turn a few degrees first in one direction and then in the opposite direction by means well known in the art. The gripper shaft 17 carriers at intervals therealong grippers 18. Each gripper comprises a hub portion 19 adapted to surround the gripper shaft, such hub portion being bifurcated and having lugs 20 through which passes a screw 21 to hold the gripper tightly in place on the shaft. Each gripper is held against rotation on the gripper shaft by a key 19*a*.

Each of the grippers 18 comprises a rigid arm 22 having at its extremity a transversely extending neck portion 23 carrying an offset foot 24. The foot 24 has a sheet positioning surface 25 adapted when the gripper is in operative position to engage the edge of a sheet to properly position the same on the carrier. Fastened to the arm 22 by screws 26 is a positioning finger 27 having a somewhat upturned positioning foot 28. The finger 27 is resilient and may be made, for example, of spring steel. Threaded through the arm 22 is an adjusting screw 29 which engages the finger 27, as shown in Figure 3, to adjust the position of the finger 27 relatively to the arm 18. The adjusting screw 29 is maintained in desired adjusted position by a nut 30 engaging the surface of the arm 18.

As many grippers 18 are provided as there are rollers 10. The radius of each roller 18 is preferably equal to the radius of each roller 9 plus the thickness of each tape 14 as shown in Figure 2. One of the grippers is fastened to the gripper shaft 17 in longitudinal alignment with each roller 10, as shown in Figure 2. That is, the finger 27 is positioned in the same vertical plane as the roller. The positioning portion 25, however, is offset from the roller as shown in Figure 2. Such portion intersects the plane of the upper surface of the tapes 14 and also the plane of the sheet carried thereby, as shown in Figure 1. Since a plurality of the grippers are employed the portions 25 of the respective grippers cooperate to position the forward edge of the sheet on the carrier so that the sheet is properly positioned longitudinally of the carrier and properly oriented on the carrier. The foot 28 of the finger 27 of each gripper presses upon the peripheral surface of the underlying roller 10 when the grippers are in operative position, as shown in Figure 1. When the grippers are in such position the extremity of the foot 28 of each finger 27 enters a recess 31 provided in the corresponding arm 18, as shown in Figure 1.

The operation of the structure is as follows. When the carrier 7 is at its extreme right-hand position the grippers are down in operative position, as shown in full lines in Figure 1, with each foot 28 pressing resiliently against the underlying roller 10 and each positioning portion 25 extending down into the depression 32 between the rollers 9 and 10 so as to intersect the plane of the upper surfaces of the tapes 14. The carrier 7 then begins its advancing movement toward the left. After it has advanced a short distance a sheet is delivered to the carrier from right to left, such sheet being supplied at higher speed than the carrier and being directed to move between the upper surfaces of the tapes 14 and the feet 28 of the fingers 27. The tension of the fingers 27 is adjusted by the adjusting screw 29 so that for a particular weight of stock being handled the forward edge of each sheet delivered as above described to the carrier will crowd its way beneath the feet 28 of the grippers and will come to rest against the portions 25 of the arms 18. A sheet is shown at S in Figure 1. Thus each sheet is properly positioned longitudinally of the carrier, properly oriented upon the carrier and firmly held down. The carrier then advances from left to right to the end of its stroke, at which time the grippers are still down, as shown in full lines in Figure 1.

As the carrier commences its return movement toward the right the gripper shaft is immediately turned in the clockwise direction, viewing Figure 1, to raise the grippers from the full line to the chain line position. At the same time the pinion 16 operates the shaft 8 as above described so that the carrier moves out from beneath the sheet and allows the sheet to fall onto a pile or other support.

While I have shown and described a present preferred embodiment of the invention it is to be distinctly understood that the same is not limited thereto but may be otherwise variously embodied within the scope of the following claims.

I claim:

1. Sheet handling apparatus comprising a movable carrier against which a sheet being handled is adapted to rest and means on the carrier for positioning the sheet comprising an arm having a stop portion adapted to engage an edge of the sheet and a holding portion adapted to hold the sheet in place on the carrier by engaging a face of the sheet and pressing the sheet against the carrier.

2. Sheet handling apparatus comprising a carrier, a turnable shaft carried by the carrier and positioning and holding means carried by the shaft, said positioning and holding means in one position of the shaft cooperating with the carrier to properly position a sheet thereon by engagement with an edge of the sheet and hold the sheet thereon by pressing the sheet against

the carrier and in another position of the shaft being disposed out of engagement with the sheet to permit delivery thereof from the carrier.

3. Sheet handling apparatus comprising a carrier and sheet positioning and holding means carried by the carrier and movable to operative position to engage an edge of a sheet to position it and also hold the sheet in place on the carrier by pressing the sheet against the carrier and to inoperative position to free the sheet from the carrier.

4. Sheet handling apparatus comprising a carrier and sheet positioning and holding means carried by the carrier and movable to operative position with a portion thereof intersecting the sheet carrying surface of the carrier to engage an edge of a sheet and another portion thereof holding the sheet in place on the carrier by pressing the sheet against the carrier and to inoperative position to free the sheet from the carrier.

5. Sheet handling apparatus comprising a carrier having a bodily movable endless element upon which a sheet is adapted to be carried and sheet positioning and holding means carried by the carrier and movable to operative position with a portion thereof extending below the upper surface of said element to engage an edge of a sheet and another portion thereof holding the sheet in place on the carrier by pressing the sheet against the carrier and to inoperative position to free the sheet from the carrier.

6. Sheet handling apparatus comprising a carrier and a sheet positioning and holding arm carried by the carrier and movable to operative position to engage an edge of a sheet to position it and to inoperative position out of contact with the edge of the sheet, said arm having a portion holding the sheet in place on the carrier by pressing the sheet against the carrier when said arm is in operative position.

7. Sheet handling apparatus comprising a carrier and a sheet positioning and holding arm carried by the carrier and movable to operative position to engage an edge of a sheet to position it and to inoperative position out of contact with the edge of the sheet, said arm having a resilient finger holding the sheet in place on the carrier by pressing the sheet against the carrier when said arm is in operative position.

8. A gripper comprising a portion to engage the edge of a sheet to position it and a portion operable simultaneously with the first mentioned portion to hold the sheet by engaging the surface of the sheet.

9. A gripper comprising a portion to engage the edge of a sheet to position it and a holddown finger connected with said portion to hold the sheet by engaging the surface of the sheet.

10. A gripper comprising a movable arm having a portion to engage the edge of a sheet to position it and resilient holddown means connected with the arm to hold the sheet by engaging the surface of the sheet.

11. A gripper comprising a swingable arm having an end portion having a surface extending transversely of the length of the arm to engage the edge of a sheet to position it, said swingable arm also having a portion spaced from said end portion to engage the surface of the sheet to hold it.

12. A gripper comprising a sheet positioning arm and a resilient sheet holding finger carried by said arm, said finger being adapted to hold a sheet in place by pressing against its surface.

13. A gripper comprising a sheet positioning portion, a sheet holding portion and means for adjustably positioning said portions relatively to each other, said sheet holding portion being adapted to hold a sheet in place by pressing against its surface.

14. A gripper comprising a sheet positioning arm, a resilient sheet holding finger carried by the arm and means for adjusting the position of the free end of the finger relatively to the arm, said finger being adapted to hold a sheet in place by pressing against its surface.

15. A gripper comprising a sheet positioning member and a sheet holding member fastened directly to the positioning member and movable relatively thereto, the holding member having a sheet engaging foot, the positioning member having a recess for receiving a portion of said foot when the holding member is in one position relatively to the positioning member.

16. A gripper comprising a sheet positioning arm and a resilient sheet holding finger connected with the arm and adjustable with respect thereto, the finger having a sheet engaging foot, the arm having a foot receiving recess positioned to receive the end edge of the foot when the gripper is operative upon a sheet.

17. A gripper comprising a sheet positioning arm and a sheet holding finger fastened directly to the arm, the arm having a sheet engaging foot offset laterally from the finger.

18. Sheet handling apparatus comprising a movable carrier, sheet holding means for holding a sheet on the carrier and sheet positioning means connected to the holding means to engage an edge of a sheet on the carrier, the portion of the positioning means engaging the edge of the sheet being offset generally along such edge from the portion of the holding means engaging the sheet.

19. Sheet handling apparatus comprising a movable carrier having means on which a sheet is adapted to lie and having a depression adjacent an edge thereof and a gripper having a portion entering said depression to engage an edge of the sheet and a portion pressing the sheet against the carrier.

20. Sheet handling apparatus comprising a movable carrier having means for supporting a sheet including a sheet underlying member adjacent an edge of the carrier, means pressing the sheet against said member and means offset from said member intersecting the plane of the sheet for engaging an edge of the sheet to position the same on the carrier.

ANDREW NEUHART.