US 20050222541A1

(19) United States

(12) Patent Application Publication

(10) Pub. No.: US 2005/0222541 A1

(43) Pub. Date: Oct. 6, 2005

Lopez et al.

(54) POSITIVE FLOW VALVE

(76) Inventors: **George A. Lopez**, Laguna Beach, CA (US); **Thomas F. Fangrow JR.**, Mission Viejo, CA (US); **David C. Arnold**, Mission Viejo, CA (US); **Bruce M. Hubrecht**, Canyon Lake, CA (US); **Alison D. Brummett**, Corona Del Mar, CA (US); **Thomas J. Gustus**, Costa Mesa, CA (US); **Dennis M. Bui**, Alta Loma, CA (US)

Correspondence Address:
KNOBBE MARTENS OLSON & BEAR LLP
2040 MAIN STREET
FOURTEENTH FLOOR
IRVINE, CA 92614 (US)

(21) Appl. No.: **11/085,808**

(22) Filed: **Mar. 21, 2005**

Related U.S. Application Data

(63) Continuation of application No. 10/163,719, filed on Jun. 5, 2002, now Pat. No. 6,932,795, which is a continuation of application No. 09/411,988, filed on Oct. 4, 1999, now Pat. No. 6,428,520, which is a continuation of application No. 08/767,587, filed on Dec. 16, 1996, now abandoned.

Publication Classification

(51) **Int. Cl.**[7] **A61M 5/00**

(52) **U.S. Cl.** **604/249**; 604/256; 251/149.1

(57) **ABSTRACT**

A closed system, spikeless, positive-flow valve device includes a body defining an internal cavity. At the proximal end of the body is an opening which is preferably sufficiently large to receive an ANSI standard tip of a medical implement. The valve includes a plastic, resilient silicon seal which fills the upper cavity and opening with an oval seal cap having a slit. The opening presses the oval seal cap to keep the slit closed in the decompressed state. The slit opens as the nose of the medical implement compresses the seal into the cavity and the seal cap is free from the opening. The housing also includes a fluid space which facilitates fluid flow between the medical implement and a catheter tip. The fluid space within the valve automatically and reversibly increases upon insertion of the medical implement into the cavity and decreases upon withdrawal of the medical implement, such that a positive flow from the valve toward the catheter tip is effected upon withdrawal of the medical implement, thereby preventing a flow of blood from a patient into the catheter when the medical implement is removed from the valve.

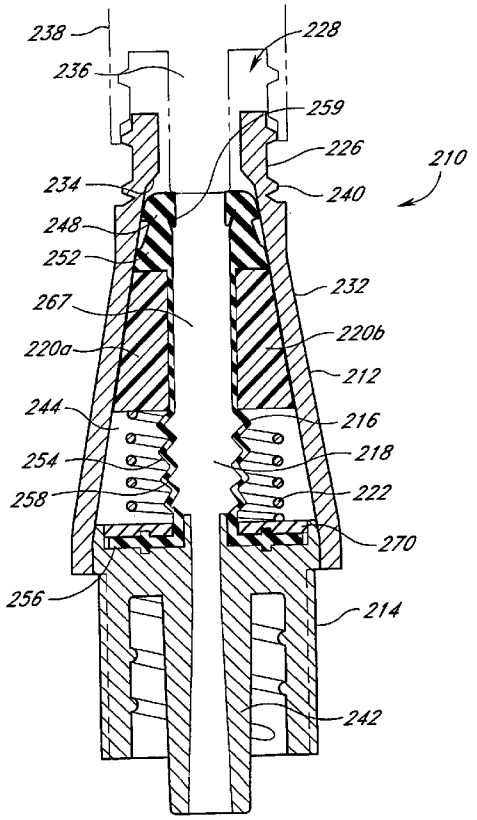

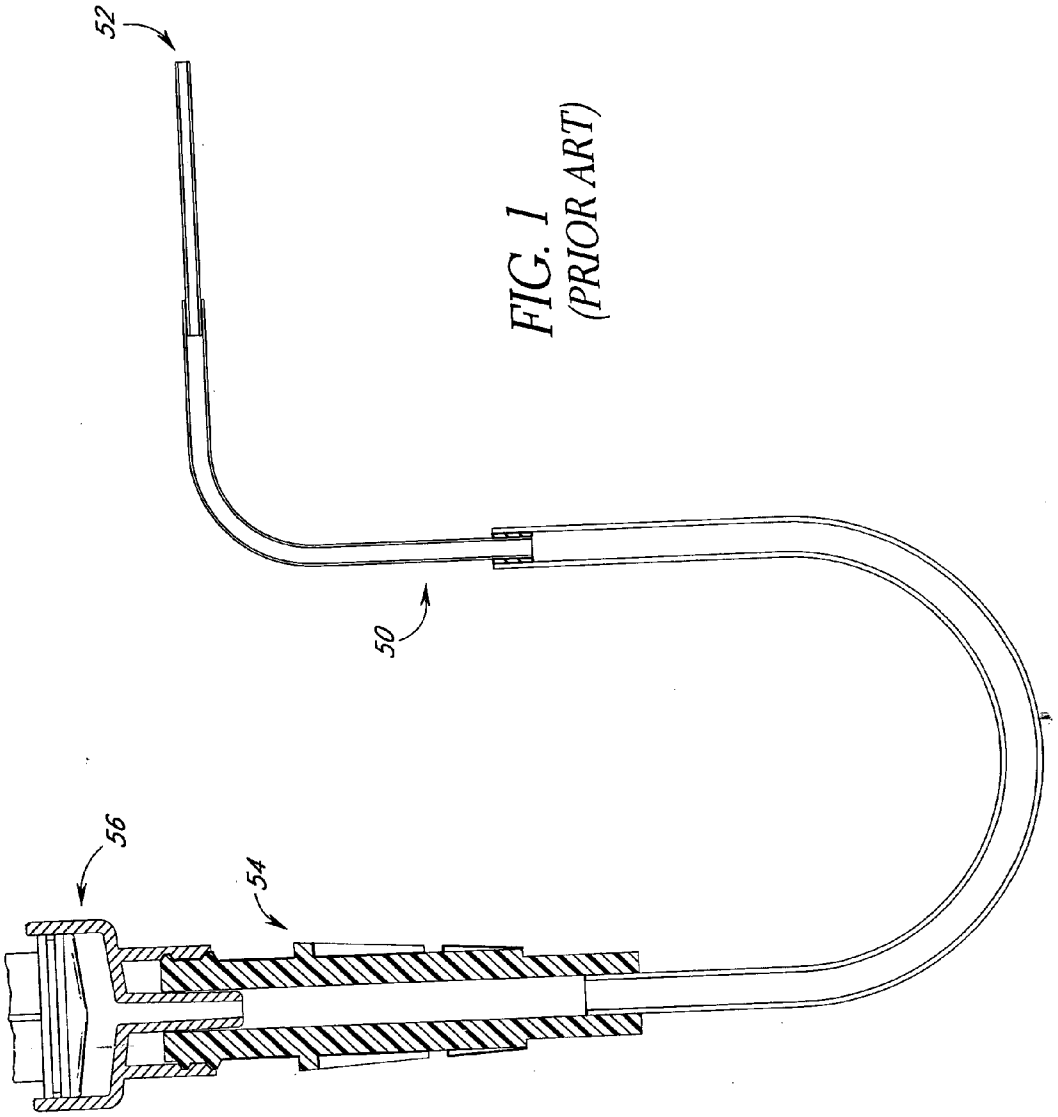

FIG. 1
(PRIOR ART)

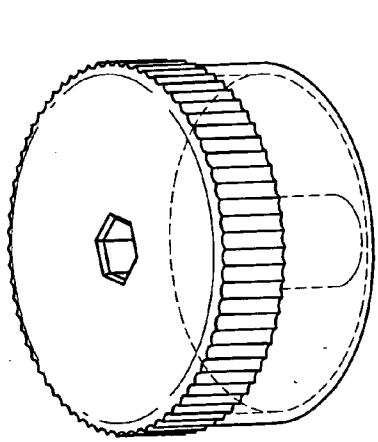

FIG. 2B
(PRIOR ART)

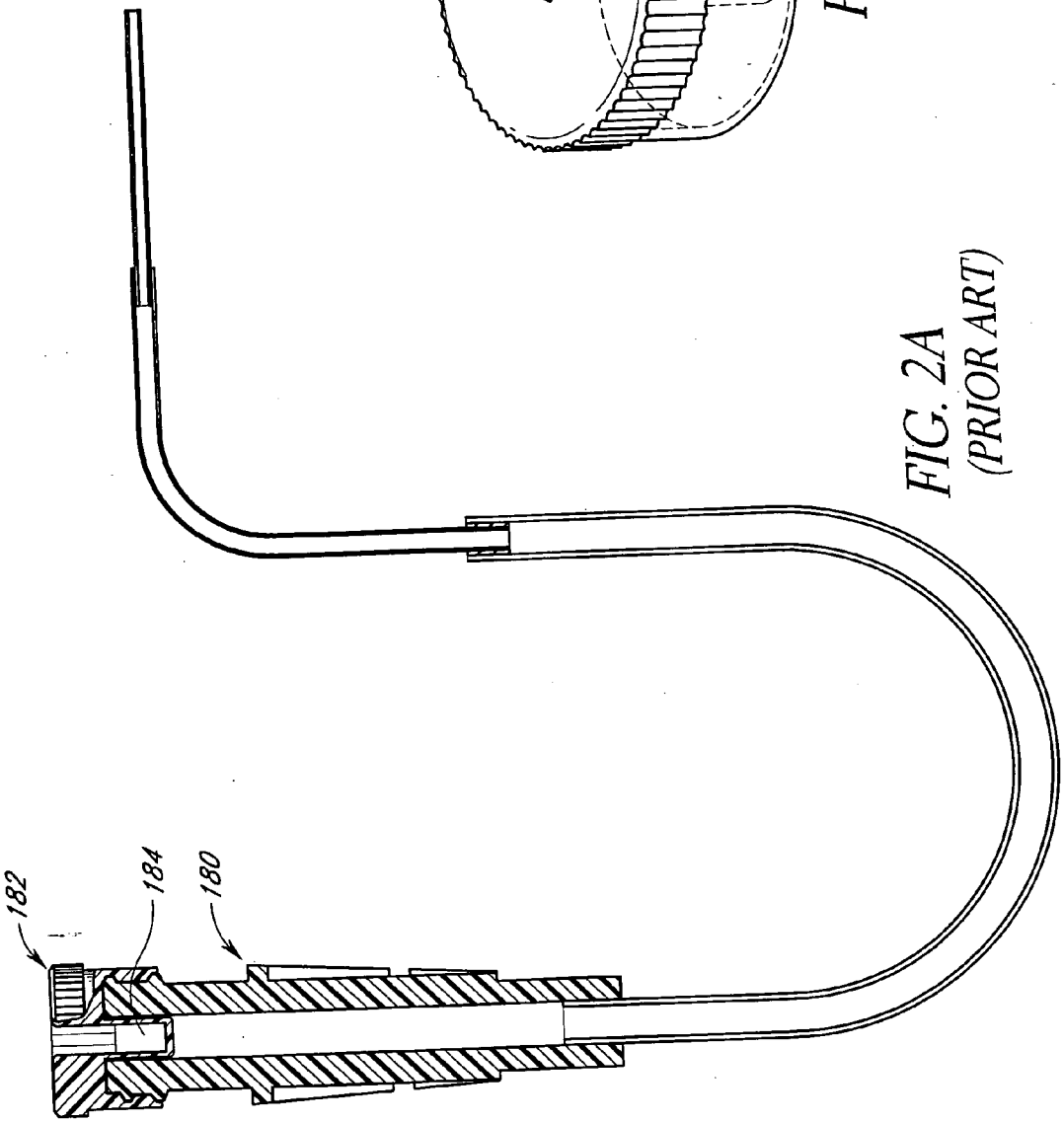

FIG. 2A
(PRIOR ART)

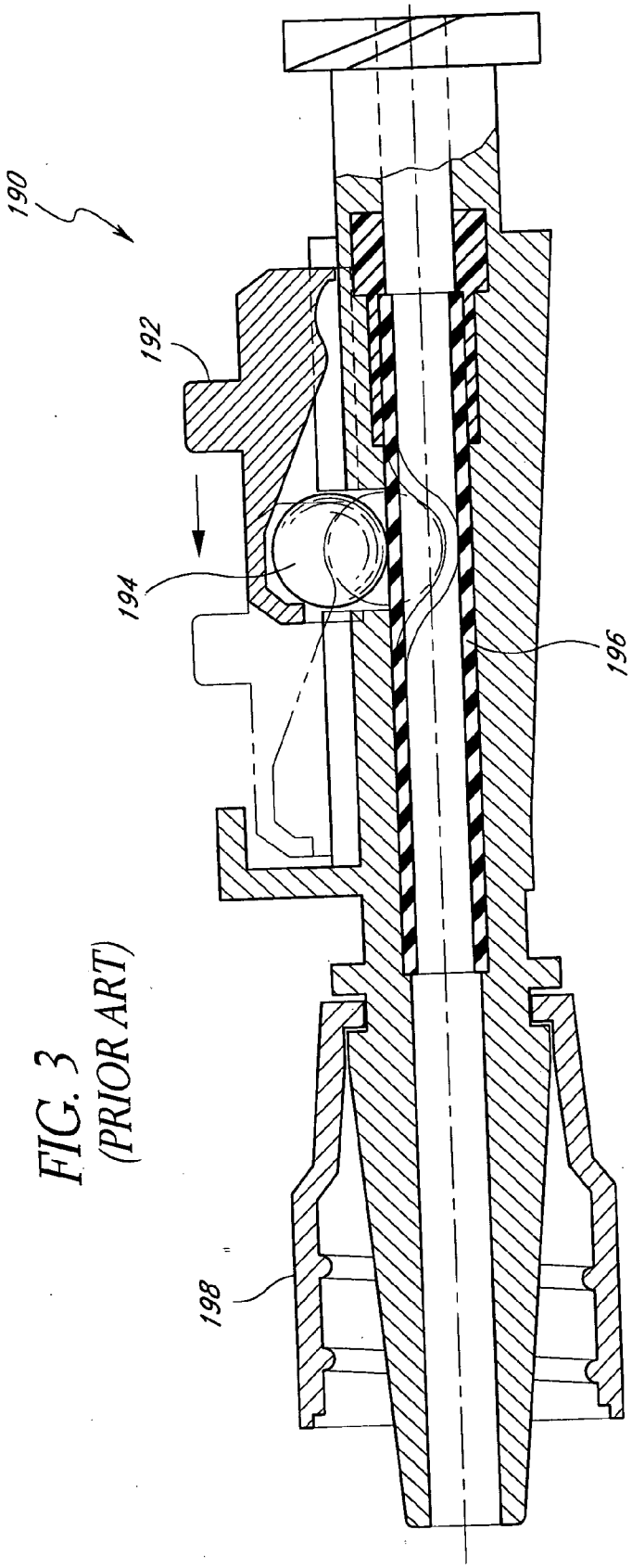

FIG. 3
(PRIOR ART)

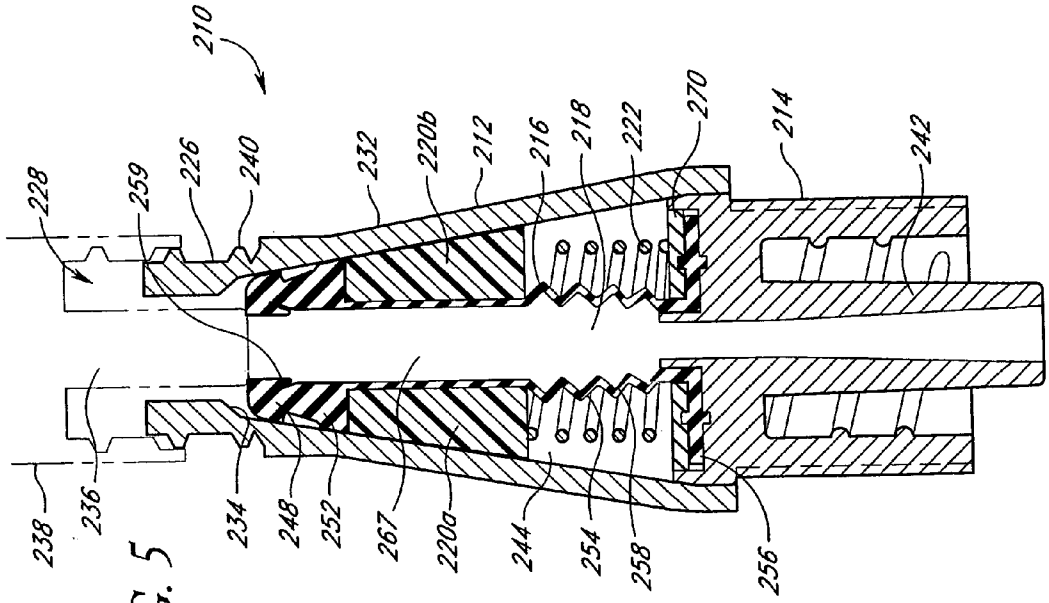
210
228
259
226
240
232
220b
212
216
218
222
270
214
242
238
236
234
248
252
267
220a
244
254
258
256

FIG. 5

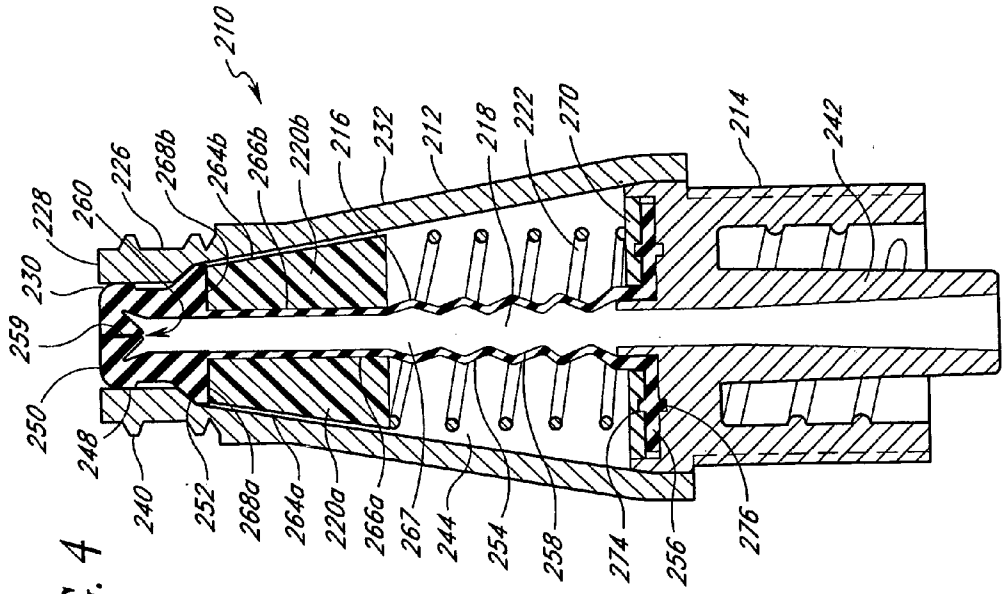
210
228
260
226
268b
264b
266b
220b
216
232
212
218
222
270
214
242
230
259
250
248
240
252
268a
264a
220a
266a
267
244
254
258
274
256
276

FIG. 4

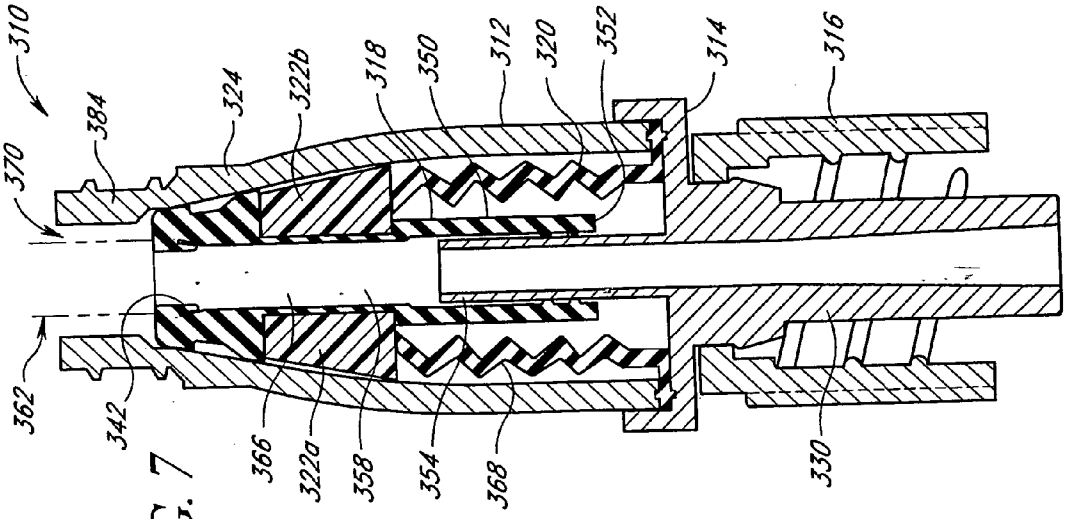
310
370
384
324
322b
318
350
312
320
352
314
316
362
342
366
322a
358
354
368
330

FIG. 7

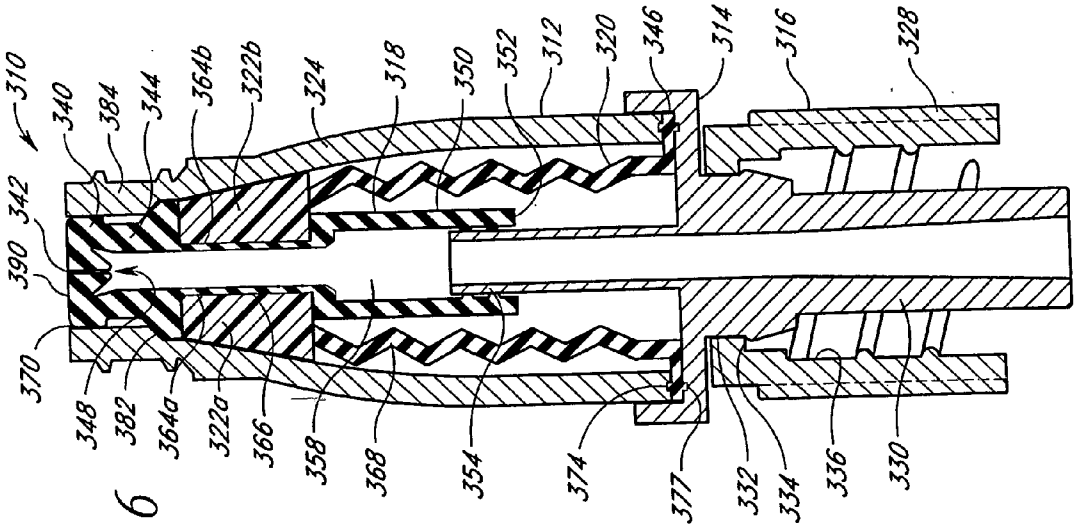
310
340
384
344
364b
322b
324
318
350
352
312
320
346
314
316
328
342
390
370
348
382
364a
322a
366
358
368
354
374
377
332
334
336
330

FIG. 6

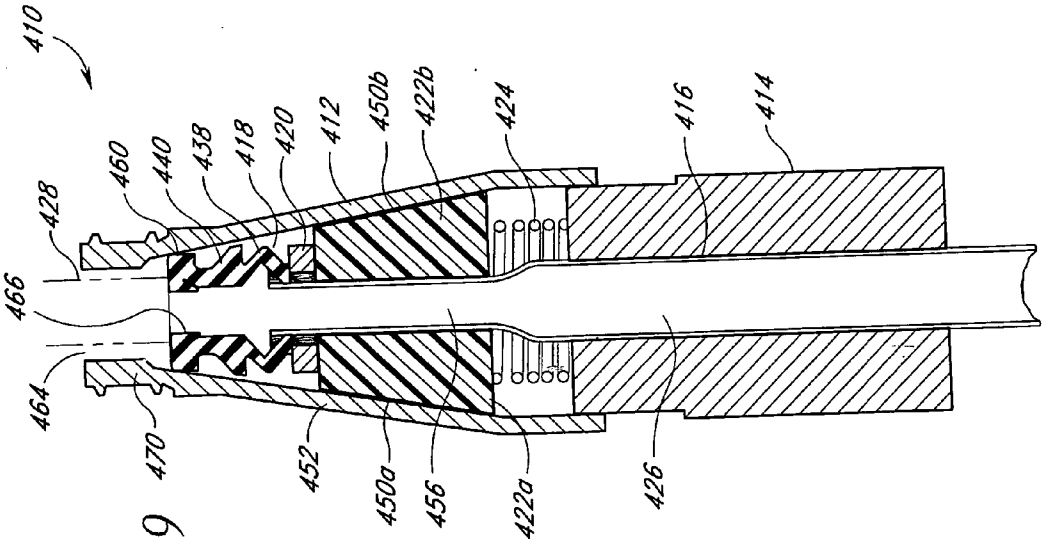
410
460
440
438
418
420
412
450b
422b
424
416
414
428
466
464
470
452
450a
456
422a
426

FIG. 9

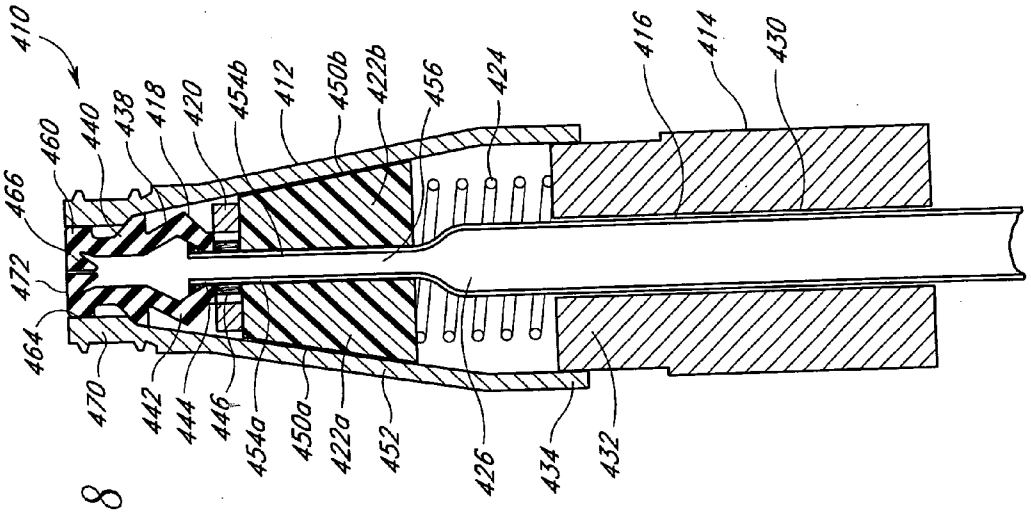
410
460
440
438
418
420
454b
412
450b
422b
456
424
416
414
430
466
472
464
470
442
444
446
454a
450a
422a
452
426
434
432

FIG. 8

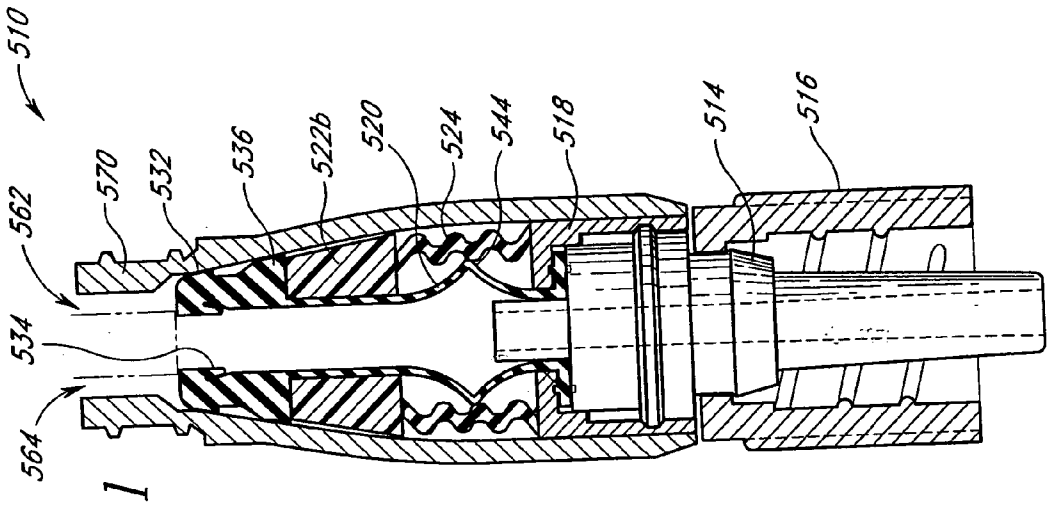
510
562
570
532
536
522b
520
524
544
518
514
516
534
564

FIG. 11

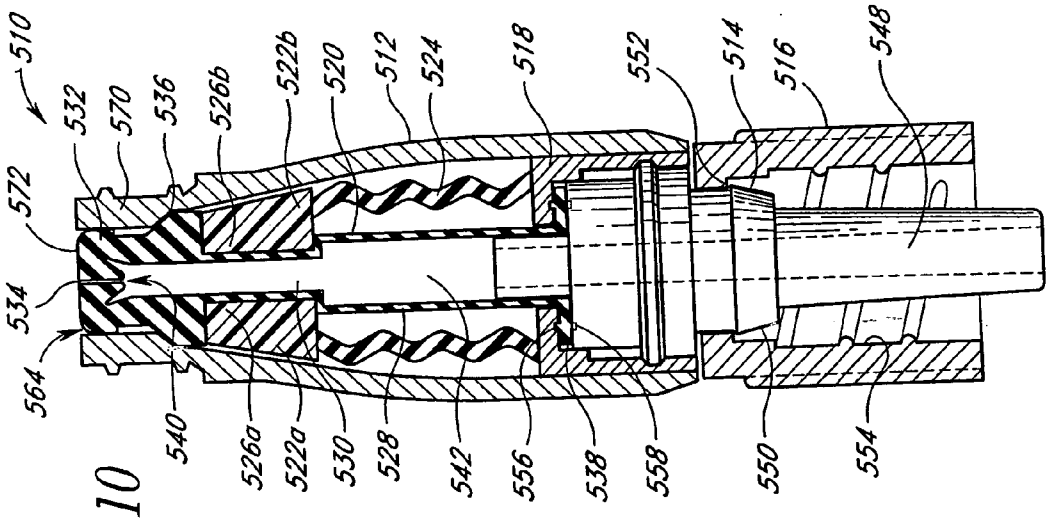
510
532
570
536
526b
522b
520
512
524
518
552
514
516
548
572
534
564
540
526a
522a
530
528
542
556
538
558
550
554

FIG. 10

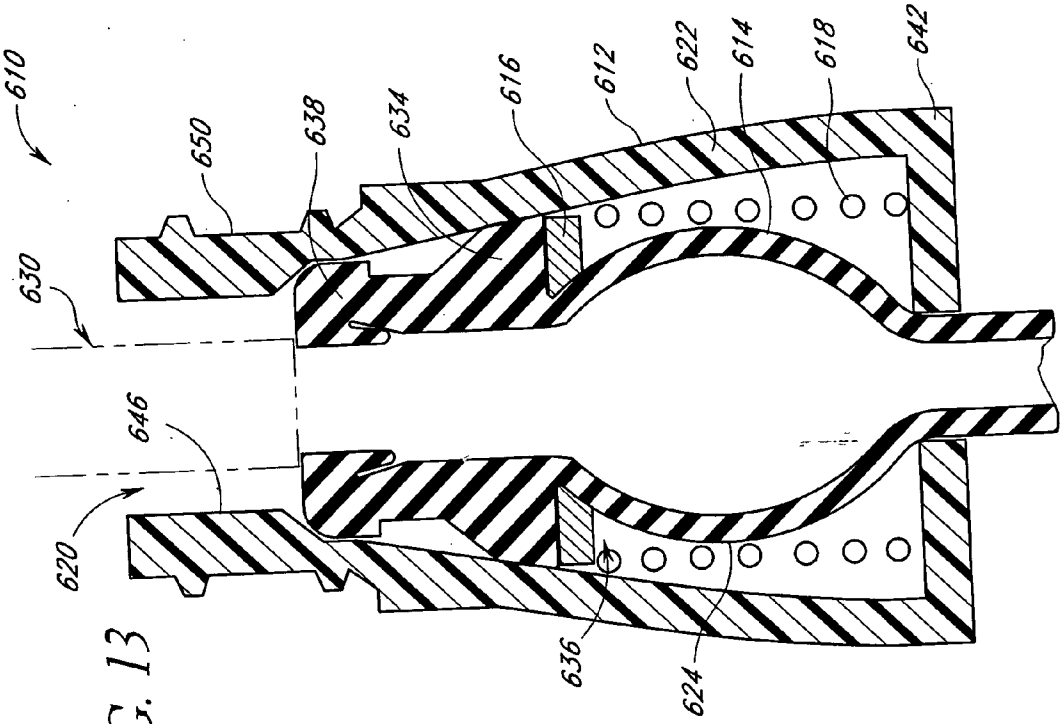
610
650
638
634
616
612
622
614
618
642
630
646
620
636
624

FIG. 13

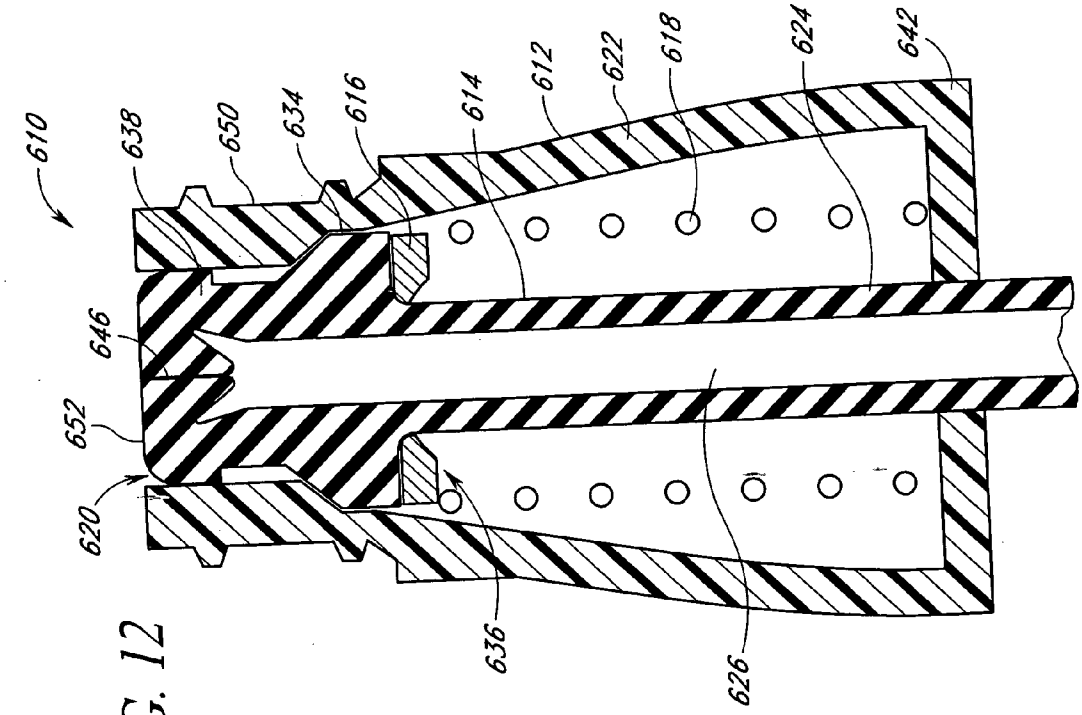
610
638
650
634
616
614
612
622
618
624
642
646
652
620
636
626

FIG. 12

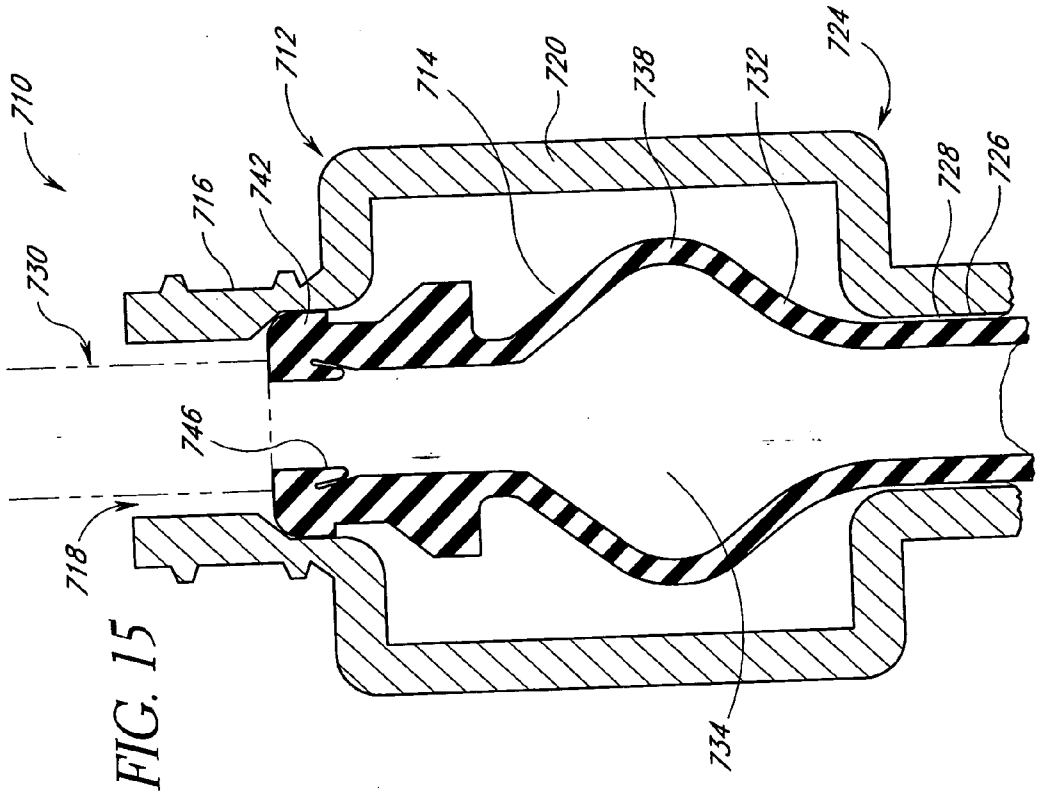
710
712
714
720
738
732
724
716
742
728
726
730
746
718
734

FIG. 15

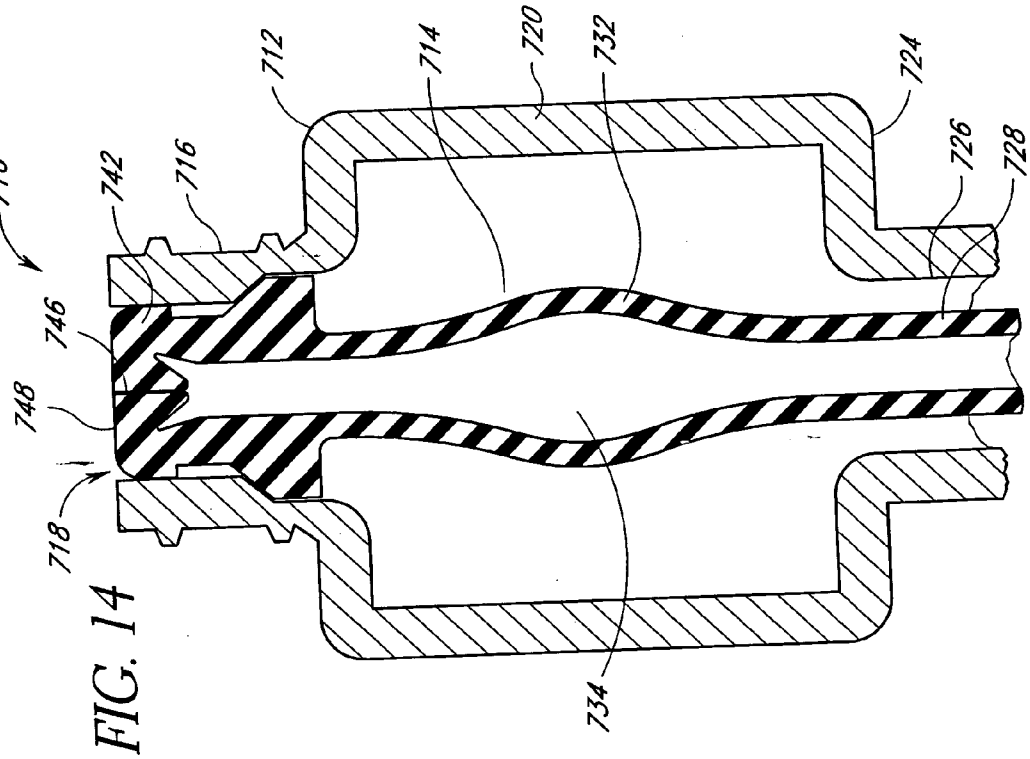
710
712
714
720
732
724
742
716
726
728
746
748
718
734

FIG. 14

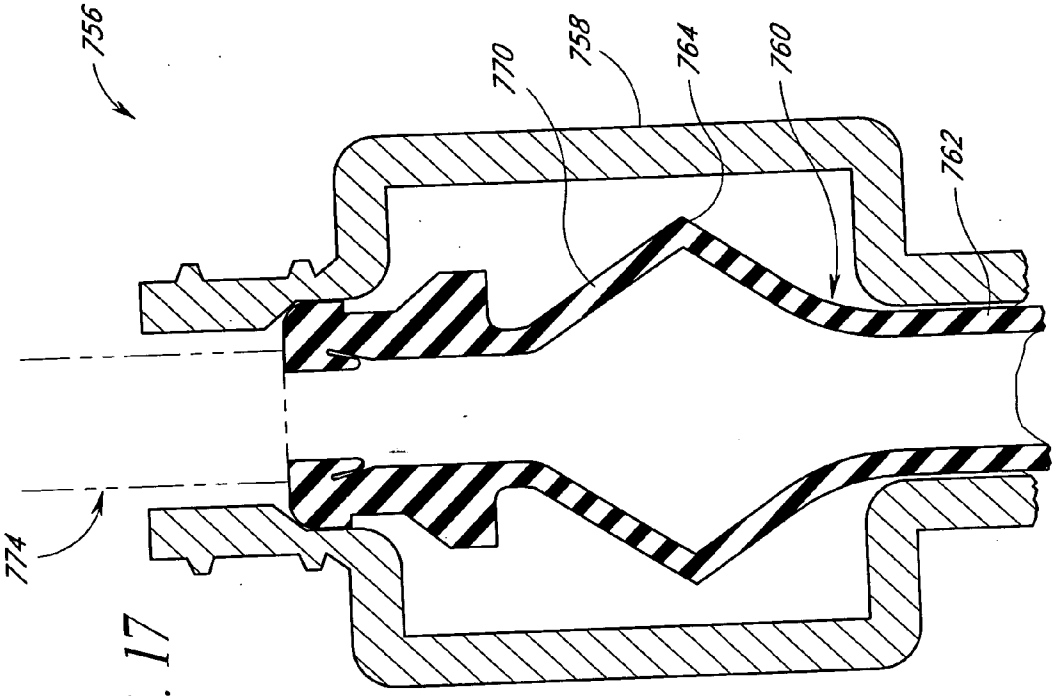

FIG. 17

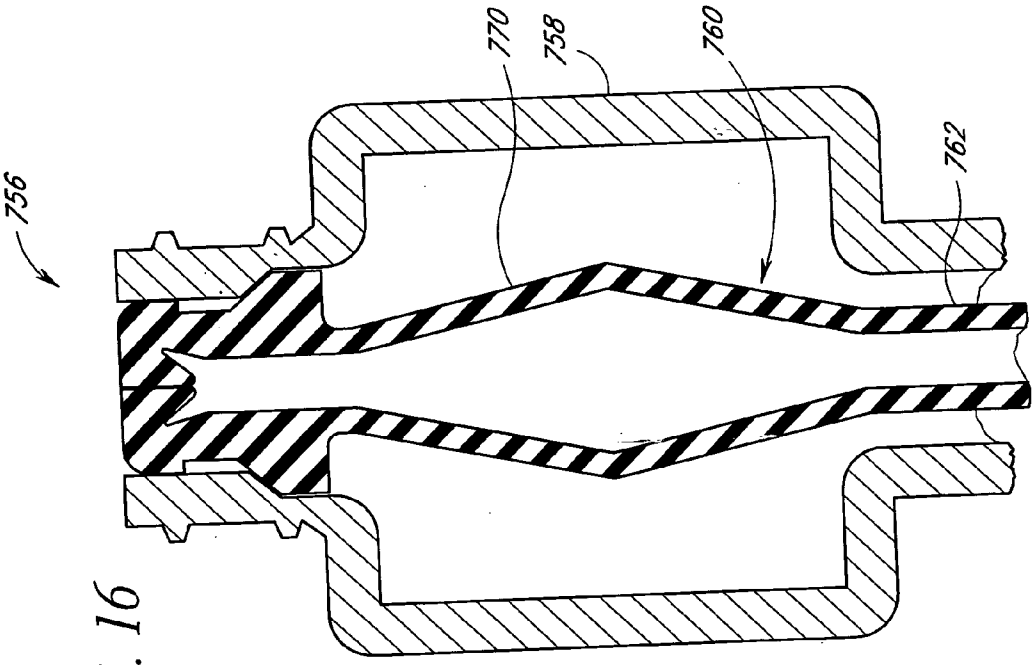

FIG. 16

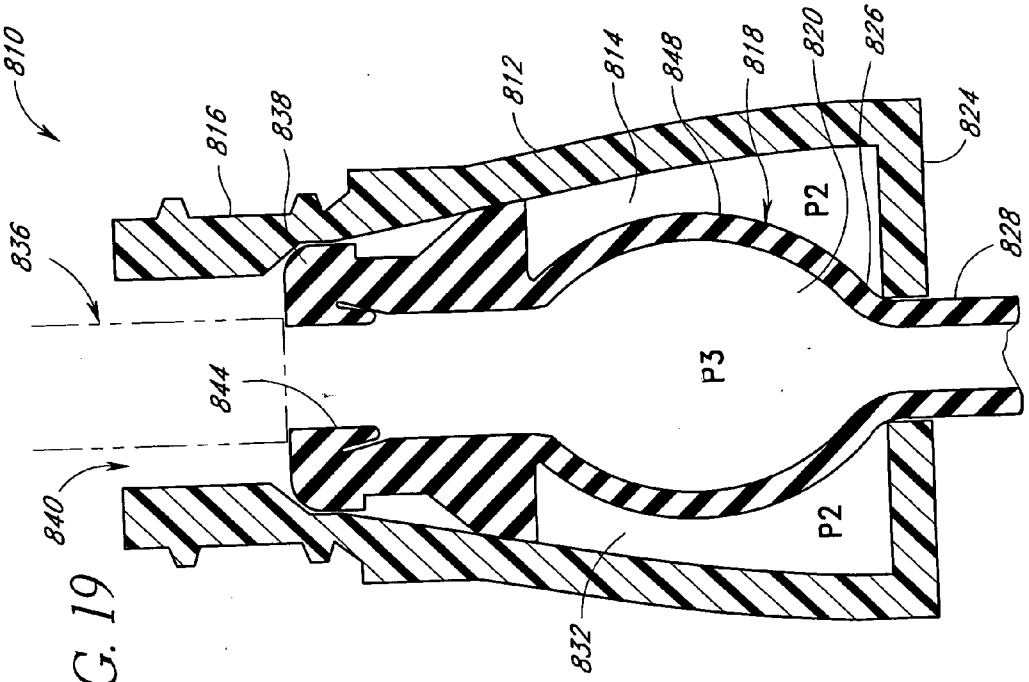
810
816
838
812
814
848
818
820
826
824
836
P2
828
844
P3
840
P2
832

FIG. 19

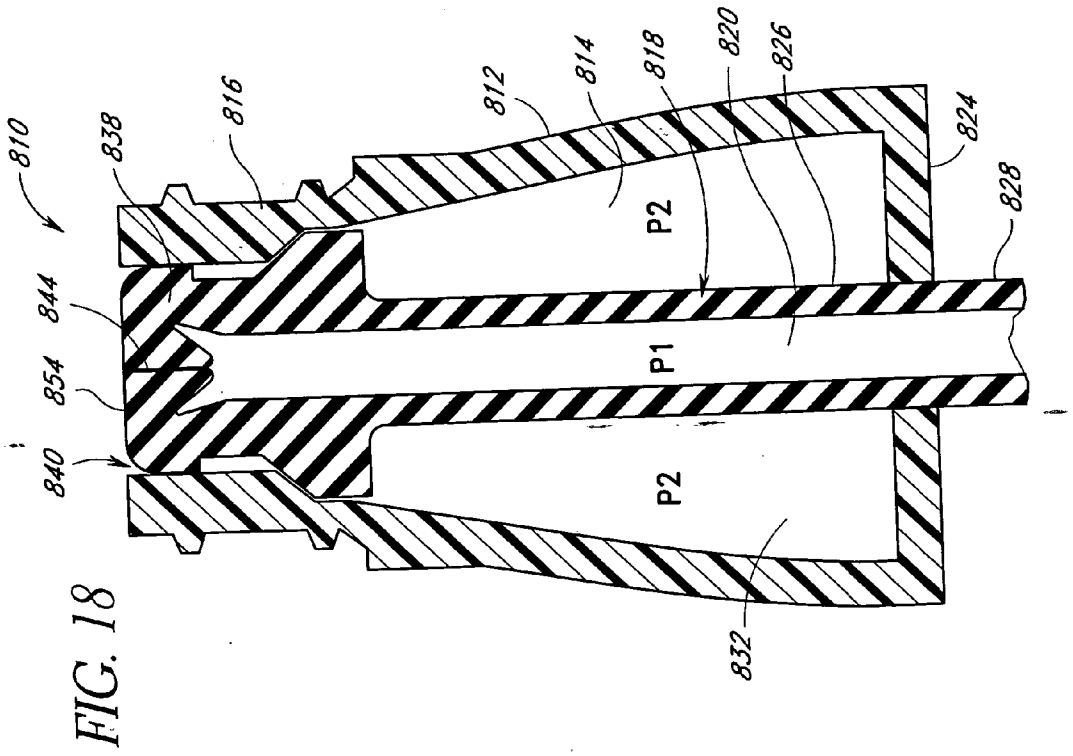
810
838
816
812
814
818
820
826
824
844
P2
828
854
P1
840
P2
832

FIG. 18

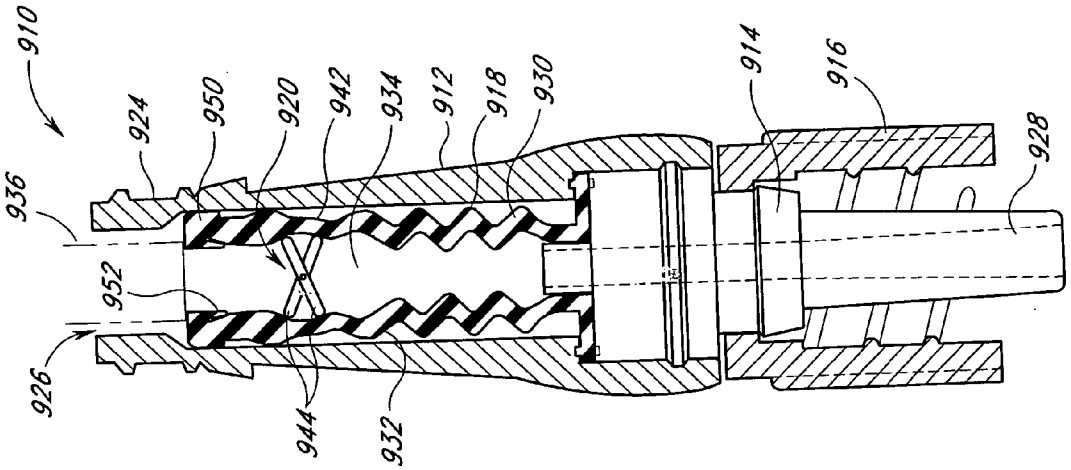
910
936
924
950
920
942
934
912
918
930
914
916
928
952
926
944
932

FIG. 21

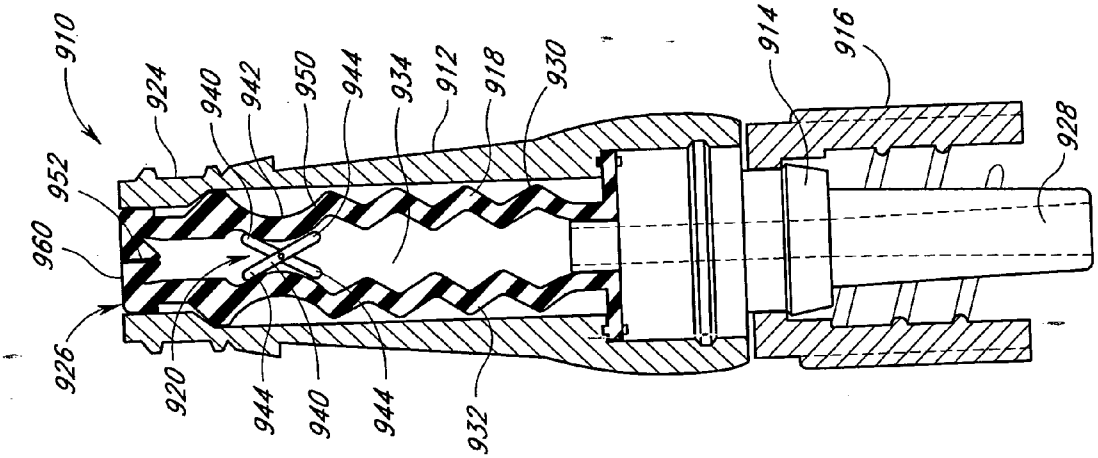
910
952
960
926
924
940
942
950
944
934
912
918
930
914
916
928
920
944
940
944
932

FIG. 20

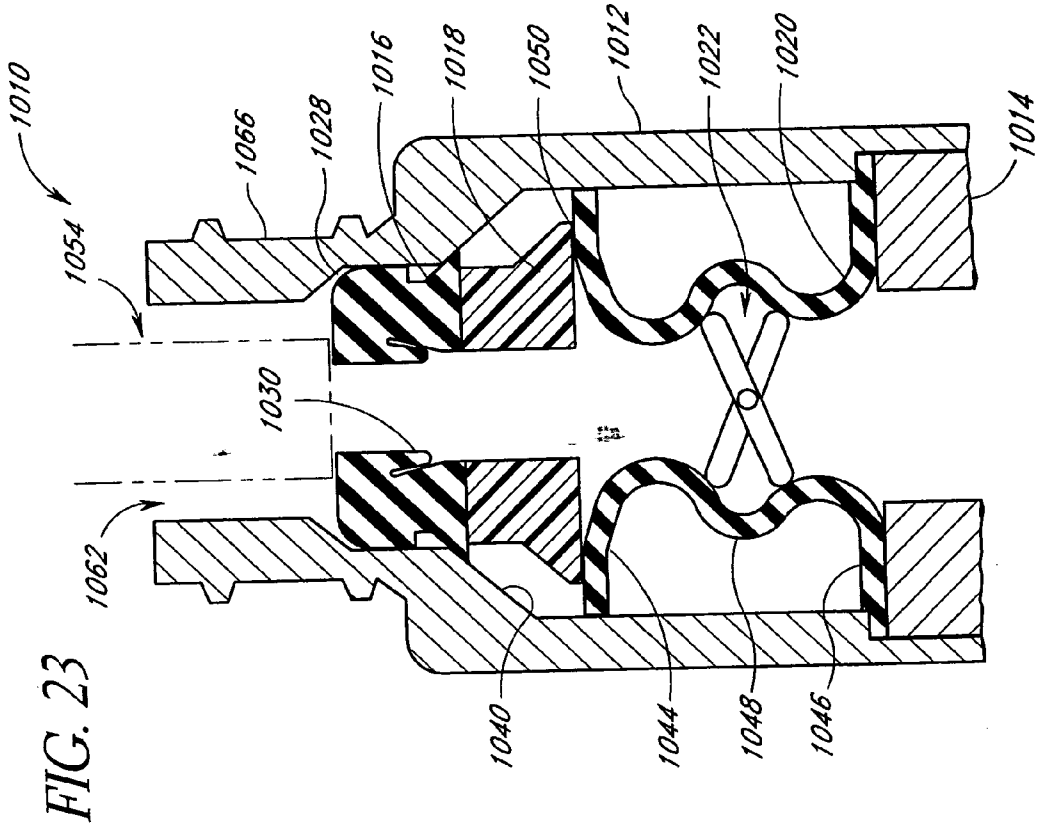
1010
1054
1066
1028
1016
1018
1050
1012
1022
1020
1014
1030
1062
1040
1044
1048
1046

FIG. 23

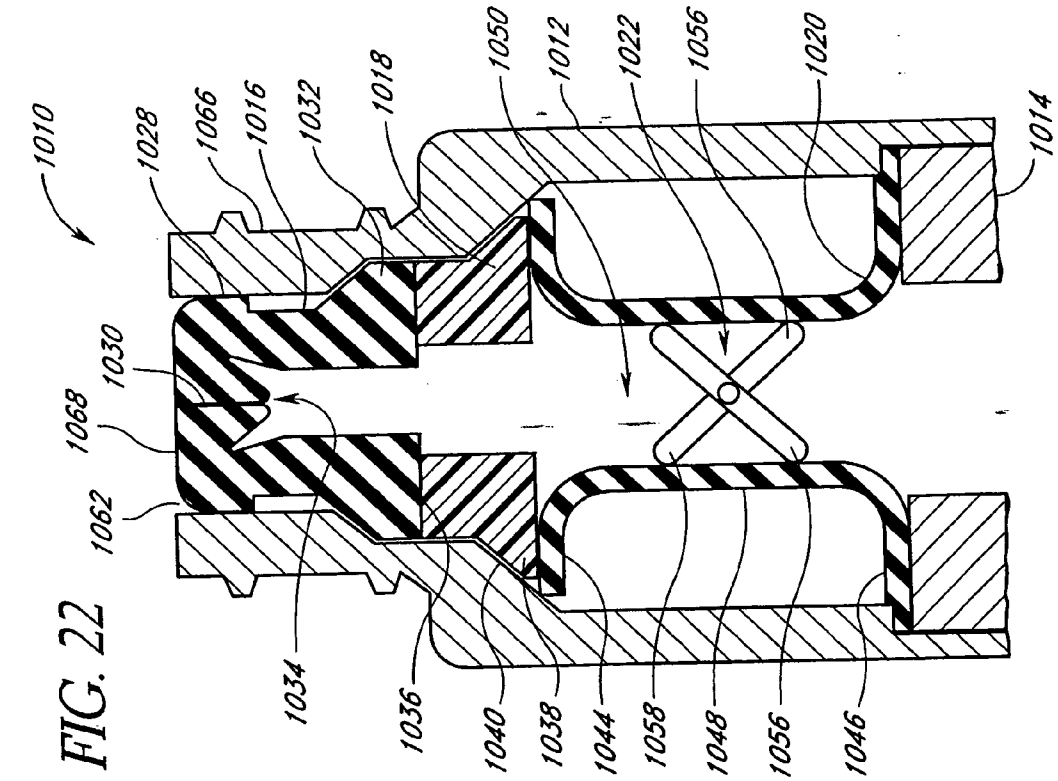
1010
1028
1066
1016
1032
1018
1050
1012
1022
1056
1020
1014
1030
1068
1062
1034
1036
1040
1038
1044
1058
1048
1056
1046

FIG. 22

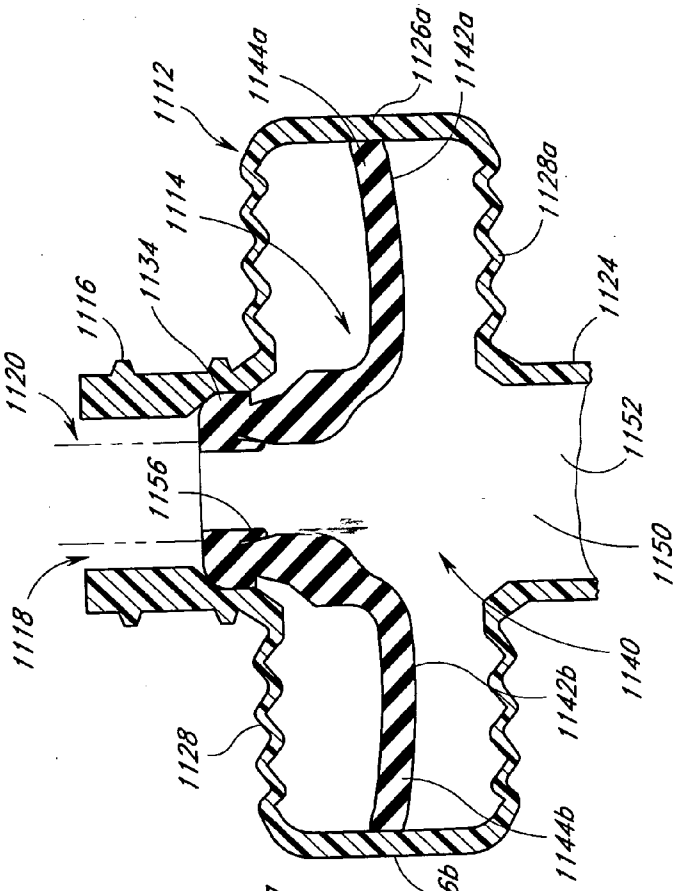
1110
1112
1114
1116
1118
1120
1124
1126a
1126b
1128
1128a
1134
1140
1142a
1142b
1144a
1144b
1150
1152
1156

FIG. 25

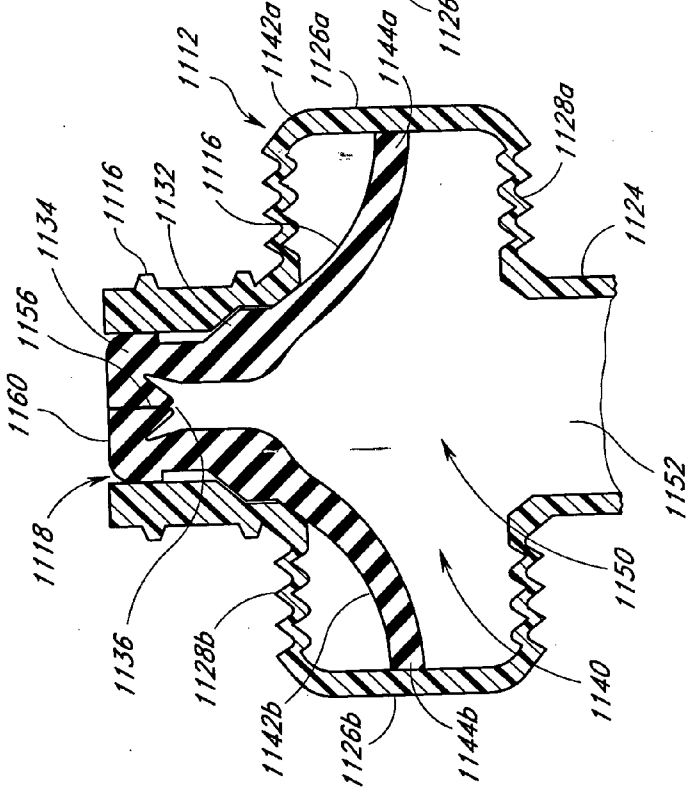
1112
1116
1118
1124
1126a
1126b
1128a
1128b
1132
1134
1136
1140
1142a
1142b
1144a
1144b
1150
1152
1156
1160

FIG. 24

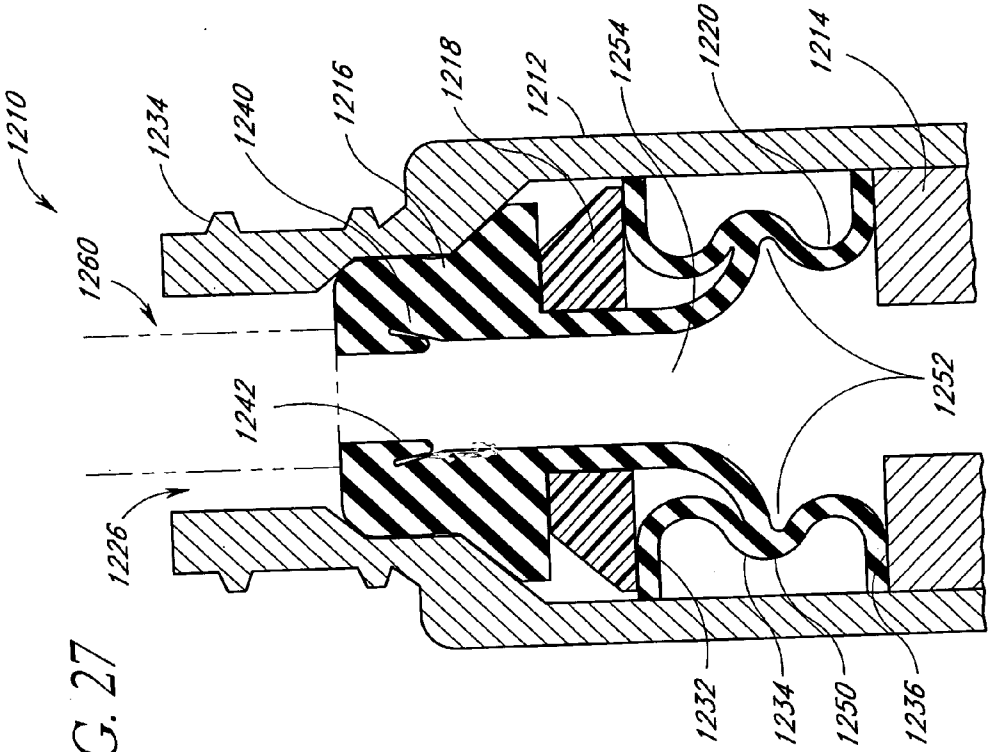
1210
1234
1240
1216
1218
1212
1254
1220
1214
1260
1242
1226
1252
1232
1234
1250
1236

FIG. 27

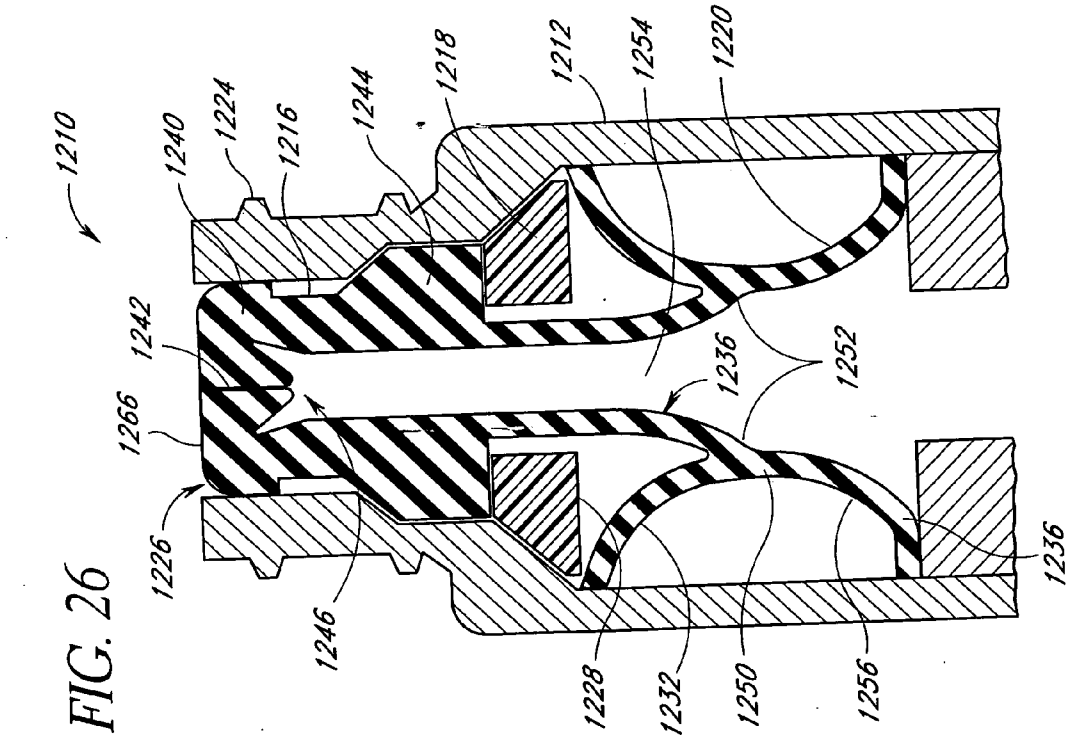
1210
1240
1224
1216
1244
1218
1212
1254
1220
1242
1266
1226
1246
1236
1252
1228
1232
1250
1256
1236

FIG. 26

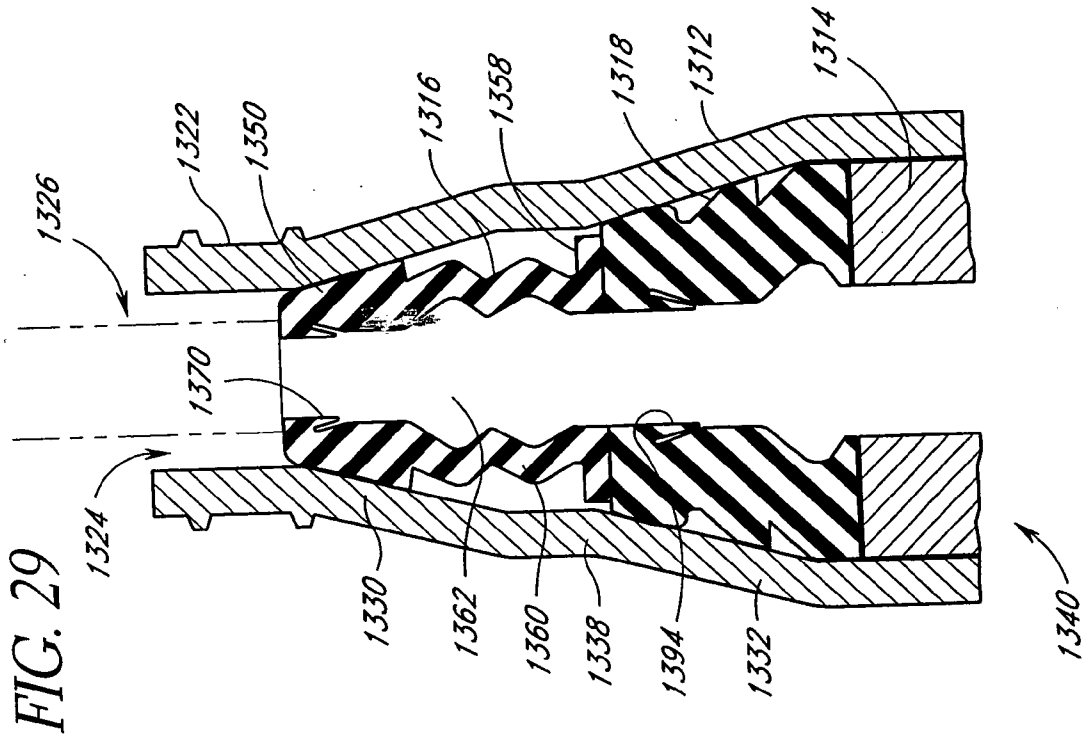
1326
1322
1350
1316
1358
1318
1312
1314
1370
1324
1330
1362
1360
1338
1394
1332
1340

FIG. 29

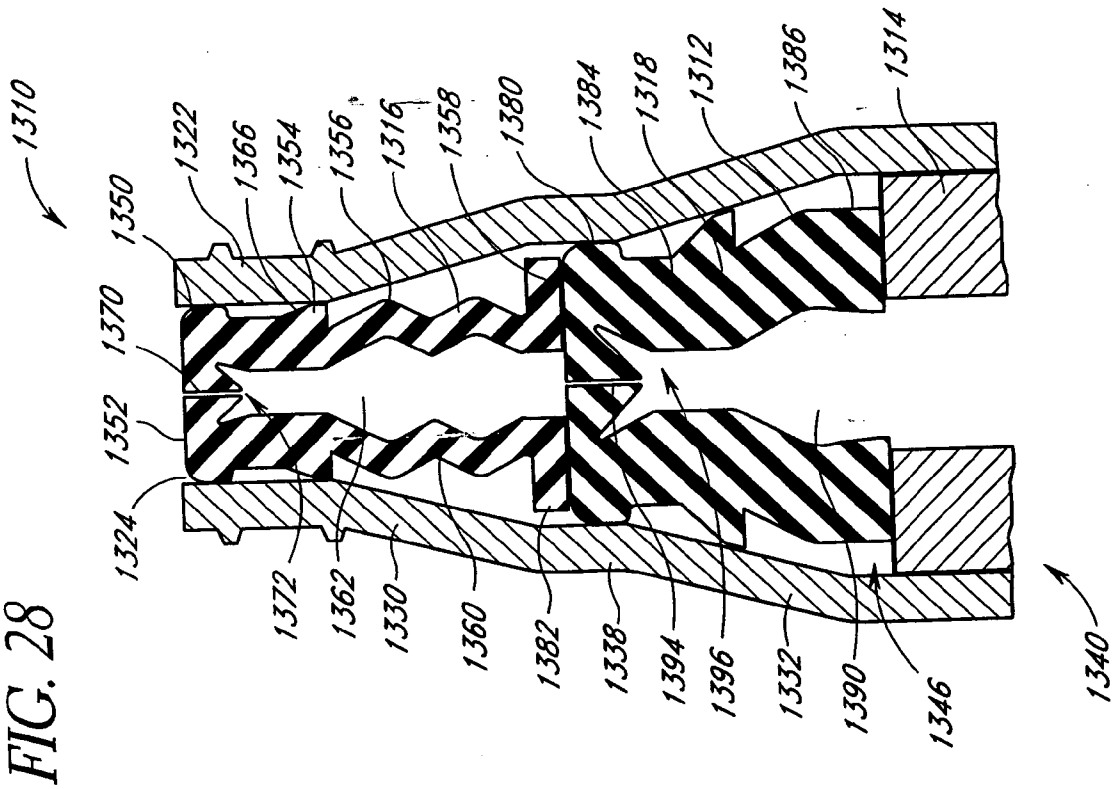
1310
1350
1322
1366
1354
1356
1316
1358
1380
1384
1318
1312
1386
1314
1370
1352
1324
1372
1362
1330
1360
1382
1338
1394
1396
1332
1390
1346
1340

FIG. 28

FIG. 30

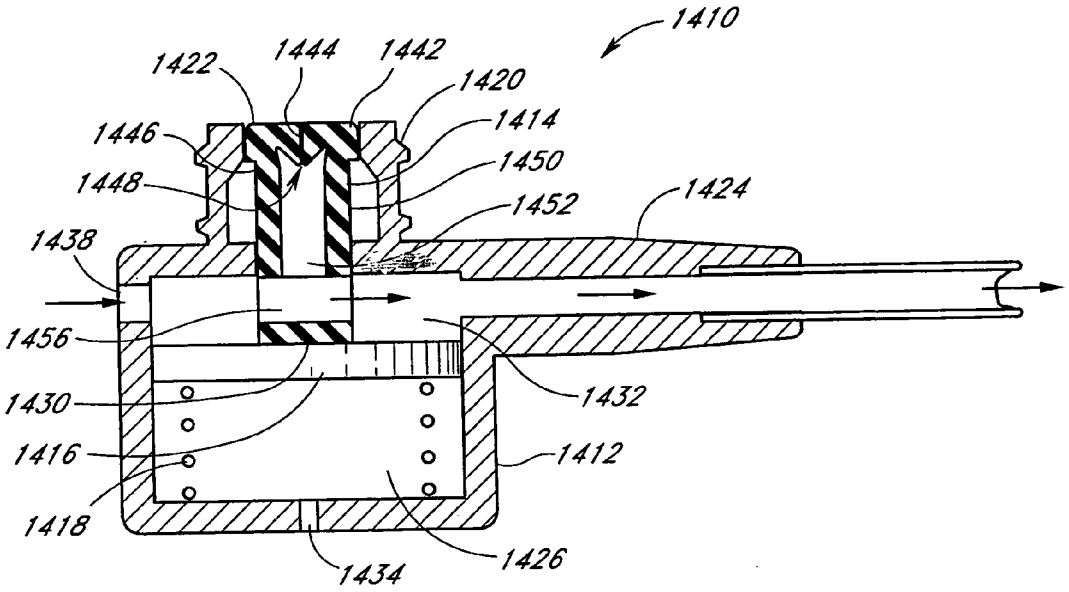
1410
1422
1444
1442
1420
1414
1446
1450
1448
1452
1424
1438
1456
1432
1430
1416
1412
1418
1426
1434

FIG. 31

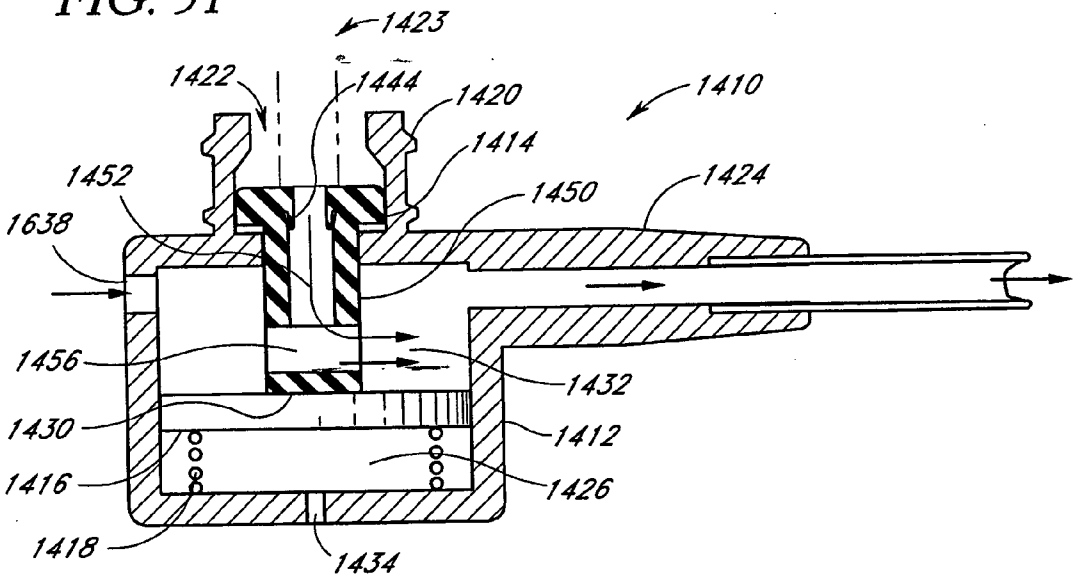
1423
1422
1444
1420
1410
1414
1452
1450
1424
1638
1456
1432
1430
1412
1416
1426
1418
1434

FIG. 32

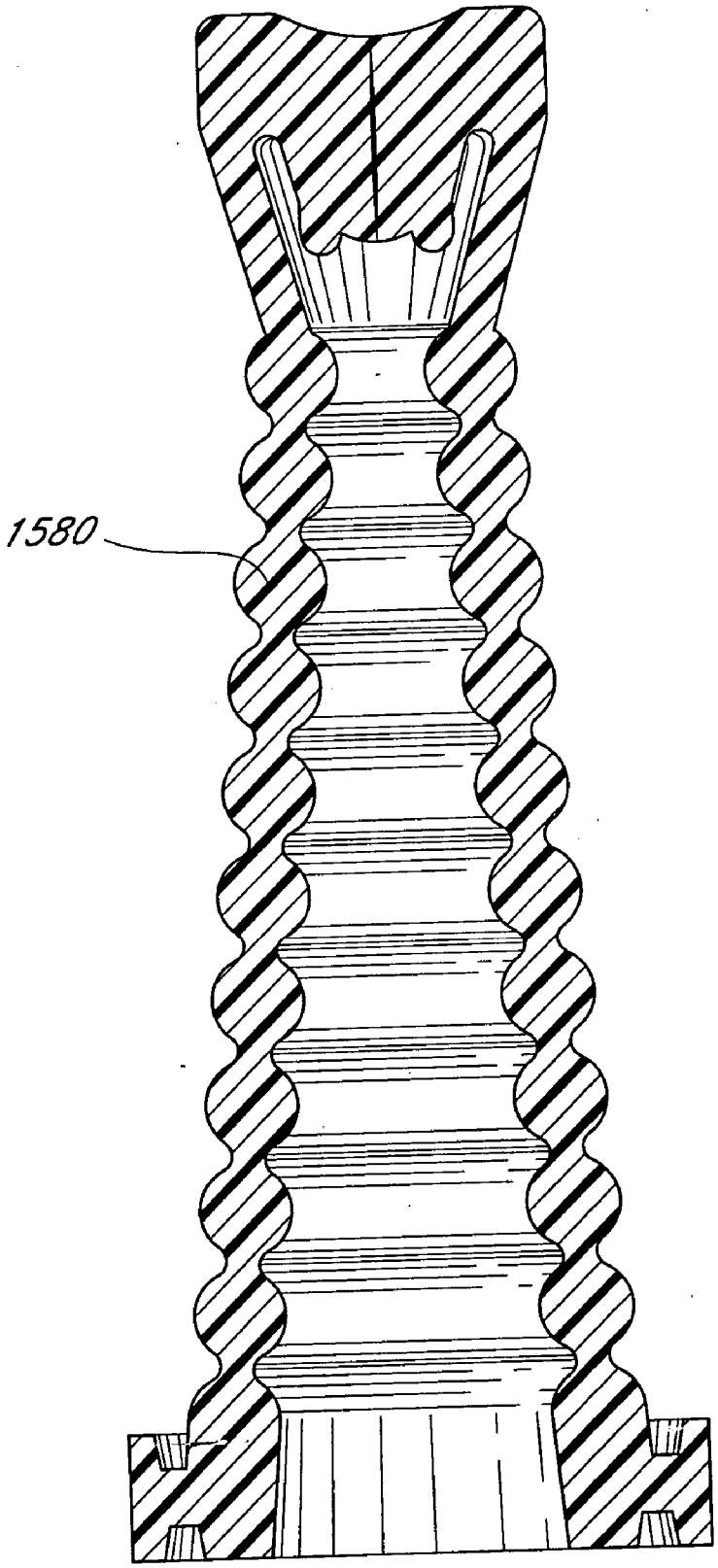

POSITIVE FLOW VALVE

[0001] This application is a continuation of pending U.S. application Ser. No. 10/163,719, filed Jun. 5, 2002, which is a continuation of U.S. application Ser. No. 09/411,988, filed Oct. 4, 1999, now U.S. Pat. No. 6,428,52, which is a continuation of U.S. application Ser. No. 08/767,587, filed Dec. 16, 1996, now abandoned.

BACKGROUND OF THE INVENTION

[0002] 1. Field of the Invention

[0003] This invention relates generally to a medical valve, and in particular to a positive flow valve which, when connected between a medical implement and a catheter to facilitate fluid flow therethrough, induces a positive flow of fluid through a tip of the catheter from the valve upon disconnection of the medical implement, thereby eliminating the problem of blood-clogging or clotting in the catheter.

[0004] 2. Description of the Related Art

[0005] The manipulation of fluids for parenteral administration in hospitals and medical settings routinely involves the use of connectors and valves for facilitating the movement of fluids between two points. Fluid connectors and valves typically employ needles or luers to pierce a septum or seal covering sterile tubing or to pierce a septum or seal of a medicament container of fluid. Fluid then passes from the container or fluid-filled tubing into a syringe or second set of tubing. Since the ready passage of fluids through the connectors and valves is often critical to patient survival, it is imperative that the connectors and valves function reliably and repeatedly. Connectors and valves that malfunction during use may be life-threatening.

[0006] Many connectors or valves, especially those employing several mechanical components, have a relatively high volume of fluid space within them. There is potential for the creation of a "dead space" (i.e. an increase in the fluid containment area which will cause fluid within the patient to be drawn therein) in the fluid space during removal or disconnection of the tubing or other medical implements such as conduits, syringes, IV sets (both peripheral and central lines), piggyback lines, and similar components which can be used in connection with a medical valve. Withdrawal of the medical implement creates a suction force which draws fluid back toward the valve in a phenomenon known as "backflash." This is particularly troublesome in the case where the valve is connected through a catheter to a patient. A suction force is generated by the withdrawal of the medical implement which draws blood from the patient into the catheter. This blood clot and clog the catheter near its tip, rendering it inoperable, and may even result in a clot of blood in the patient, which may prove fatal. Attempts to avoid backflash by coating the inner surface of the catheter near its tip in order to prevent blood from sticking to the interior surfaces of the catheter and clogging it have not been successful.

[0007] The risk of blood clogging of the catheter is significantly heightened where the inner diameter of the catheter is small (e.g., 27 gauge). These small catheters have the advantage, however, that they reduce the trauma and discomfort caused by insertion into a patient. Because these catheters have a very small passage therethrough, even a small suction force may draw sufficient amount of fluid back through a catheter toward the valve to introduce blood into the catheter tip, which blood may clog the catheter's passage. This back flow is hereinafter referred to as a negative flow. **FIG. 1** shows an example of a catheter **50** having a small portion near the tip **52** that is inserted into the patient, and a valve **54** connected between one end of the catheter and a medical implement **56**. The problem associated with the creation of "dead space" or a drawing of fluid from the catheter towards the valve is illustrated by this Figure. As illustrated therein, when the tip or nose of the medical implement **56** is withdrawn from the valve **54**, the space previously occupied by the implement **56** becomes "dead space." This newly created space has a lower pressure than the fluid within the valve, catheter and patient, such that fluid is drawn into that space, and thus travels from the patient in the direction of the dead space. To avoid blood from being drawn into the catheter, a zero flow or a positive flow, defined as flow or fluid displacement directed from the valve through the catheter tip to the patient, must be effected at the time the medical implement is withdrawn. For a sufficient margin of safety, a positive flow toward the patient is desirable.

[0008] To avoid negative flow or backflash, healthcare workers presently practice the method of disconnecting the valve and simultaneously transferring fluid through the catheter by manipulating the medical implement to induce positive flow. This method is clumsy and difficult, and may result in an inaccurate transfer of medicament.

[0009] One way to induce a positive flow in the catheter is illustrated in **FIGS. 2***a* and **2***b*. Here, the proximal end of a valve **180** is enclosed with a stylet or displacer **182** upon withdrawal of the medical implement (not shown). An elongated portion **184** of the stylet **182** takes up at least a portion of the fluid space, thereby reducing the volume of the fluid space, and may eliminate the dead space therein. The elongated portion **184**, however, must be sufficiently long to displace more fluid than that volume of fluid which may be drawn from the catheter towards the valve by the withdrawal of the implement, and hence may be difficult to construct for proper performance. The use of the stylet **182** further requires an additional step that may be overlooked by the nurse and the stylet **182** may be misplaced or lost. In addition, this specific type of valve **180** has many significant drawbacks, among them the fact that it does not have a seal with a swabbable surface that can be swabbed after each use for sterility.

SUMMARY OF THE INVENTION

[0010] In accordance with the present invention there is provided a positive flow valve which is advantageously utilized between a catheter and another medical implement, and with which the flow of a fluid between the implement and catheter (and a patient within which the catheter is employed). The valve of this invention has several features, no single one of which is solely responsible for its desirable attributes.

[0011] In general, the positive flow valve of the present invention has the attributes of safety, positive flow for eliminating dead space, reliable and repeatable performance, simplicity of manufacture and use, a seal for use in establishing fluid flow which need not be pierced with a sharp spike or cannula, suitability of high pressure applications,

and employment of a valve that is swabbable after use to provide sterility and has a fluid-tight seal at high pressure.

[0012] The present invention is a swabbable, needle-less, positive flow valve that has a fluid space which automatically expands upon insertion of a medical implement and contracts upon withdrawal of the medical implement. When the valve is connected to a catheter, it induces a positive flow from the valve to the catheter tip upon disconnection of the medical implement to avoid the potential problems of blood-clogging. After use, the valve is swabbed in the conventional manner with a suitable substance to maintain sterility. The design of the valve avoids accidental needle or spike sticks. The valve is particularly suited for applications with a catheter where it is desirable to avoid backflash, but may be used for other applications as well.

[0013] Preferably, the valve includes a housing having a first end adapted for receiving one end of medical implement, and having a second end in communication with a catheter. The valve includes means for establishing a fluid flow path through the housing and between the medical implement and the catheter, and which is also useful in occluding the flow path through the housing and thereby preventing fluid flow between the medical implement and catheter.

[0014] Preferably, this means comprises a seal movably positioned within the housing. The seal has a passage therethrough which defines, in at least one area, a fluid containment area. The seal has a first end adapted for engagement by the medical implement. In a first position, the passage through the seal is closed at its first end, and in a second position, when the medical implement is utilized to press the seal distally within the housing of the valve, the passage through the valve is opened.

[0015] Most importantly, when the medical implement is utilized to press the seal distally and establish fluid flow therethrough, the fluid containment area therein increases in total volume, thereby retaining a fluid volume therein. When the medical implement is retracted from the valve, the seal returns to its position wherein the passage is closed at the proximal end thereof, and the volume of the fluid containment area is reduced. This reduction in fluid containment volume results in a volume of fluid being forced towards the catheter (i.e. a positive flow is established).

BRIEF DESCRIPTION OF THE DRAWINGS

[0016] The preferred embodiments of this invention, illustrating all its features, will now be discussed in detail. These embodiments depict the novel and nonobvious method and valve of this invention shown in the accompanying drawings, which are for illustrative purposes only. The drawings include the following Figures, with like numerals indicating like parts:

[0017] **FIG. 1** is a schematic cross-sectional view of a valve forming a fluid connection between a syringe and a catheter.

[0018] **FIGS. 2***a* and **2***b* illustrate a prior art valve which includes a stylet having an elongated portion after use to induce a positive flow.

[0019] **FIG. 3** is a schematic cross-sectional view of a roller-clamp valve which may be manually activated to induce a positive flow through a catheter tip from the valve.

[0020] **FIG. 4** is a longitudinal cross-sectional view of the first embodiment of the positive-flow valve of this invention before compressing the seal.

[0021] **FIG. 5** is a longitudinal cross-sectional view similar to **FIG. 4** showing the valve during compression of the seal.

[0022] **FIG. 6** is a longitudinal cross-sectional view of the second embodiment of the positive-flow valve of this invention before compressing the seal.

[0023] **FIG. 7** is a longitudinal cross-sectional view similar to **FIG. 6** showing the valve during compression of the seal.

[0024] **FIG. 8** is a longitudinal cross-sectional view of the third embodiment of the positive-flow valve of this invention before compressing the seal.

[0025] **FIG. 9** is a longitudinal cross-sectional view similar to **FIG. 8** showing the valve during compression of the seal.

[0026] **FIG. 10** is a longitudinal cross-sectional view of the fourth embodiment of the positive-flow valve of this invention before compressing the seal.

[0027] **FIG. 11** is a longitudinal cross-sectional view similar to **FIG. 10** showing the valve during compression of the seal.

[0028] **FIG. 12** is a longitudinal cross-sectional view of the fifth embodiment of the positive-flow valve of this invention before compressing the seal.

[0029] **FIG. 13** is a longitudinal cross-sectional view similar to **FIG. 12** showing the valve during compression of the seal.

[0030] **FIG. 14** is a longitudinal cross-sectional view of the sixth embodiment of the positive-flow valve of this invention before compressing the seal.

[0031] **FIG. 15** is a longitudinal cross-sectional view similar to **FIG. 14** showing the valve during compression of the seal.

[0032] **FIG. 16** is a longitudinal cross-sectional view of the seventh embodiment of the positive-flow valve of this invention before compressing the seal.

[0033] **FIG. 17** is a longitudinal cross-sectional view similar to **FIG. 16** showing the valve during compression of the seal.

[0034] **FIG. 18** is a longitudinal cross-sectional view of the eighth embodiment of the positive-flow valve of this invention before compressing the seal.

[0035] **FIG. 19** is a longitudinal cross-sectional view similar to **FIG. 18** showing the valve during compression of the seal.

[0036] **FIG. 20** is a longitudinal cross-sectional view of the ninth embodiment of the positive-flow valve of this invention before compressing the seal.

[0037] **FIG. 21** is a longitudinal cross-sectional view similar to **FIG. 20** showing the valve during compression of the seal.

[0038] **FIG. 22** is a longitudinal cross-sectional view of the tenth embodiment of the positive-flow valve of this invention before compressing the seal.

[0039] **FIG. 23** is a longitudinal cross-sectional view similar to **FIG. 22** showing the valve during compression of the seal.

[0040] **FIG. 24** is a longitudinal cross-sectional view of the eleventh embodiment of the positive-flow valve of this invention before compressing the seal.

[0041] **FIG. 25** is a longitudinal cross-sectional view similar to **FIG. 24** showing the valve during compression of the seal.

[0042] **FIG. 26** is a longitudinal cross-sectional view of the twelfth embodiment of the positive-flow valve of this invention before compressing the seal.

[0043] **FIG. 27** is a longitudinal cross-sectional view similar to **FIG. 26** showing the valve during compression of the seal.

[0044] **FIG. 28** is a longitudinal cross-sectional view of the thirteenth embodiment of the positive-flow valve of this invention before compressing the seal.

[0045] **FIG. 29** is a longitudinal cross-sectional view similar to **FIG. 28** showing the valve during compression of the seal.

[0046] **FIG. 30** is a longitudinal cross-sectional view of the fourteenth embodiment of the positive-flow valve of this invention before compressing the seal.

[0047] **FIG. 31** is a longitudinal cross-sectional view similar to **FIG. 30** showing the valve during compression of the seal.

[0048] **FIG. 32** is a longitudinal cross-sectional view of an alternative seal with a side wall formed with circular tires.

DETAILED DESCRIPTION OF THE PREFERRED EMBODIMENT

[0049] The Applicant has recognized that a roller clamp may be used to induce a positive flow in a medical valve. The use of a roller clamp in a medical valve **190** to create a positive flow upon disconnection of a medical implement (not shown) is illustrated in **FIG. 3**. The roller-clamp valve **190** is activated manually by sliding an external switch **192** to push a roller **194** against tubing **196** which connects a medical implement **198** and a catheter (not shown) to cause a positive pressure therein, thereby creating a positive flow through the catheter tip (not shown). The flow through the tubing **196** can be opened by sliding the switch **192** in the reverse direction.

[0050] This valve **190**, however, has the same disadvantage of requiring an additional step of operation as does the valve with a stylet illustrated in **FIGS. 2***a* and **2***b*, and also does not include a seal having a swabbable surface. Furthermore, the size of the roller **194** must be sufficiently large to induce a displacement of fluid within the tube which is greater than the amount of fluid which may be drawn by the vacuum force (so as to generate a positive flow), which may require a bulky valve that is hard to operate.

First Embodiment

[0051] **FIGS. 4 and 5** illustrate a first embodiment of a valve **210** in accordance with the present invention. In general, this valve **210** includes a valve body or housing **212**, a support member **214**, a seal **216** defining an inner cavity **218**, a pair of clam shells **220***a* and **220***b*, and a spring **222**. These components are assembled, as depicted in **FIG. 4**, without the need for a spike element. The inner cavity **218** forms an expandable fluid space inside the valve **210**. As discussed below, the clam shells **220***a*/**220***b* are constructed to cause the volume of the fluid space to expand or increase upon insertion of a medical implement and to contract or decrease upon withdrawal of the medical implement.

[0052] The body or housing **212** has an upper conduit **226** near a proximal end **228**, desirably with a circular opening **230** that is adapted to receive the medical implement. A side wall portion **232** is preferably tapered to cooperate with the clam shells **220***a*/**220***b*. The body **212** has an upper ledge **234** formed between the proximal end **228** and the side wall portion **232**. There is desirably a threaded portion on the housing **212** adjacent the circular opening **230** in the top of the upper conduit **226**, as best seen in **FIG. 4**. Note that "proximal" is used to denote the end of the valve **210** and other components at or near the body opening **230**, while "distal" is used to denote the opposite end of the valve.

[0053] In the first embodiment, the upper conduit **226** is adapted to receive the tip or nose **236** of an ANSI standard syringe **238**, as shown in phantom in **FIG. 5**. It is, however, contemplated that the outer diameter of the upper conduit **226** can be of any size to accommodate the attachment of other connector devices thereto. Advantageously, the proximal end of the upper conduit **226** can be equipped with a locking mechanism to facilitate locking of the valve **210** to a variety of connector devices. For example, referring to **FIG. 4**, the threaded portion of the housing **212** are preferably provided such that the housing **212** can be locked into any compatible Luer-Lock device known to those with skill in the art. The housing **212** of the first embodiment according to this invention includes conventional Luer-Lock threads **240** on the outer diameter of the upper conduit **226**.

[0054] The support member **214** has at its distal end the inner conduit **242** which may be connected to a terminal end of a catheter (not shown). The support member **214** serves as a support and attachment device for the seal **216** by holding the seal **216** in place inside the internal cavity **244** of the housing **212**. The inner conduit **242** and inner cavity **218** of the seal **216** present a continuous passageway for fluid during use.

[0055] The seal **216** is prepared from a resilient material that is flexible, inert, and impermeable to fluid, such as silicon. The seal **216** has a seal cap **248** with a generally flat top surface **250**, a shoulder **252**, a side wall **254**, and a base **256**. The side wall **254** advantageously is comprised of wall portions **258** which deform in an accordion-like fashion and assist in the reformation of the seal **216** to close the housing opening **230** upon withdrawal of the syringe **238**. During compression of the seal **216**, the wall portions **258** expand outwardly in the radial direction. The interior of the seal **216** is hollow to provide the inner cavity **218**, as best seen in **FIG. 4**. There are preferably gaps between the wall portions **258** which facilitate deformation and reformation of the seal **216**. The shoulder **252** engages the upper ledge **234** provided in the upper conduit **226** of the housing **212** such that the upper ledge **234** confines the movement of the shoulder **252** toward the opening **230** to prevent the seal **216** from being

blown through the opening **230** under high pressure in the inner cavity **218** of the seal **216**.

[**0056**] The seal cap **248** reseals the valve **210** at the opening **230**, with the top surface **250** of the seal **216** approximately flush with or slightly above or below the opening **230** upon removal of the medical implement **238**. Preferably, the seal cap **248** substantially fills the opening **230** in the top of the upper conduit **226**. After assembly, the top surface **250** of the seal cap **248** is essentially flush with the opening **230**, so that the seal cap **248** can be swabbed with alcohol or other disinfectant without leakage of the disinfectant into the valve **210**. Therefore, it is preferable that the top surface **250** be exposed so that it may be swabbed with a disinfectant.

[**0057**] To provide a fluid-tight seal at the opening **230** and to eliminate the need for a spike element to induce fluid flow upon insertion of a medical implement, the seal cap **248** has a unique shape and includes a precut slit **259**, also having a unique shape. The seal cap **248** desirably has an oval or elliptical shape with a major axis having a length larger than the inner diameter of the circular opening **230** such that the oval seal cap **248** substantially fills the opening **230** in the top of the upper conduit **226** in the decompressed state. The precut slit **259** in the seal cap **248** is squeezed shut by the circular opening **230** in the decompressed state, as seen in **FIG. 4**. In its resting state, the precut slit **259** is open. During compression of the seal **216** by insertion of a medical implement such as the syringe **238**, as illustrated in **FIG. 5**, the precut slit **259** returns to its resting state and opens, as the seal cap **248** is allowed to stretch in the portion of the upper conduit **226** which has a larger inner diameter. Fluid is thus allowed to pass through the slit **259**. Note that the terms "compressed state" and "decompressed state" are used conveniently to refer to compression and decompression of the seal **216** by insertion and withdrawal of the medical implement **238** along the longitudinal axis of the seal **216**. The terms do not relate to the radial compression of the seal cap **248** by the opening **230** of the housing **212**.

[**0058**] To further assist in creating a fluid-tight seal in the decompressed state, the seal **216** of **FIG. 4** advantageously includes the enlarged, internal, pressure responsive member **260** which is integral with the seal cap **248**. The pressure responsive member **260** enables the valve **210** to maintain a fluid-tight seal even at very high pressures sometimes experienced in medical applications, particularly when the valve **210** is connected to a patient's artery.

[**0059**] As shown in **FIGS. 4 and 5**, the clam shells **220***a*/**220***b* are desirably identical pieces disposed opposite one another symmetrically inside the valve body **212**. They are preferably made of a firm material such as a hard plastic. The external surface **264***a*/**264***b* of each clam shell **220***a*/**220***b* is tapered to cooperate with the tapered side wall portion **232** of the housing **212**, and is configured to slide along the side wall portion **232** during compression and decompression. The internal surfaces **266***a*/**266***b* of the clam shells **220***a*/**220***b* cooperate with one another to squeeze a portion of the seal side wall **254**, preferably adjacent the shoulder **252**, to form a constricted portion **267** of the seal **216**. The proximal ends **268***a*/**268***b* of the clam shells **220***a*/**220***b* engage the shoulder **252** of the seal **216** to facilitate movement of the clam shells **220***a*/**220***b* with the compression of the seal **216**. The internal surfaces **266***a*/**266***b* preferably are shaped to cause the constricted portion **267** to be substantially circular. In this embodiment, each internal surface **266***a*/**266***b* has a semi-circular, longitudinal groove that squeezes the seal **216**.

[**0060**] The spring **222** is disposed between the distal ends of the clam shells **220***a*/**220***b* and the base **256** of the seal **216**, but desirably a hard retaining disk **270** is provided adjacent the base **256** of the seal **216** to provide better support for the spring **222** and the seal **216**. In the decompressed state shown in **FIG. 4**, the spring **222** may be relaxed or be in slight compression to exert a force on the seal **216** through the clam shells **220***a*/**220***b* to keep the seal **216** closed. During insertion of the syringe **238**, the spring **222** is compressed and stores potential energy from the compression, as illustrated in **FIG. 5**. Upon withdrawal of the syringe **238**, the spring **222** releases the potential energy and pushes the clam shells **220***a*/**220***b* proximally to close the seal **216**, as shown in **FIG. 4**. The spring **222** is preferably not attached or bonded to either the clam shells **220***a*/**220***b* or the retaining disk **270** for ease of assembly. Although **FIGS. 4-5** show a helical spring **222**, any suitable spring known to those of skill in the art may be used.

[**0061**] The seal **216** is desirably relaxed longitudinally in the decompressed state (**FIG. 4**), and compressed longitudinally in the compressed state (**FIG. 5**). Alternatively, the seal **216** may be stretched longitudinally in tension by the spring **222** in the decompressed state and be relaxed or slightly compressed longitudinal in the compressed state. The base **256** of the seal **216** advantageously fits snugly and securely into a annular groove **274** provided in the retaining disk **270** and an annular groove **276** provided in the support member **214**. The annular grooves **274**,**276** form a locking mechanism to support and secure the seal **216** within the cavity **244** of the housing **212**.

[**0062**] To illustrate valve activation, **FIG. 5** shows the compressed state of the valve **210** upon insertion of the syringe **238**. A medical implement other than a syringe as known to those of skill in the art may be used. The nose **236** of the syringe **238** is placed on the seal cap **248** inside the opening **230** of the housing **212**. The application of pressure on the syringe **238** creates pressure on the seal cap **248**, and the resulting downward pressure compresses the seal **216**. This pushes the seal cap **248** away from the circular opening **230** and toward the lower portion of the housing cavity **244** which has a larger inner diameter, thereby allowing the precut slit **259** to open. The downward movement is facilitated by the compression of the spring **222** which stores the potential energy of compression and by the gaps between the wall portions **258** of the side wall **254** of the seal **216**. Fluid is now able to flow into the syringe **238**, or vice versa, depending on whether fluid is to be withdrawn from the patient or medication injected into the patient. **FIG. 5** shows the valve **210** opened by insertion of the nose **236** of the syringe **238** into the opening **230**. For intravenous applications, the valve **210** can be oriented in the position diagramed in **FIGS. 4 and 5**, or it can be rotated 180' such that fluid flows in the opposite direction.

[**0063**] In the compressed state shown in **FIG. 5**, the inner cavity **218** of the seal **216** generally contracts (becomes shorter) as compared to the decompressed state shown in **FIG. 4**. The constricted portion **267** of the inner cavity **218**, defined by the clam shells **220***a*/**220***b*, however, expands

(becomes larger) in volume when the seal **216** is in the compressed state. This results from a movement of the clam shells **220***a*/**220***b* apart from one another as they slide along the tapered side wall **232** of the housing **212**. The amount of general contraction of the seal **216** in relation to the amount of expansion of the constricted portion **267** during compression determine whether the valve **210** generates a positive, negative, or zero flow upon decompression, as discussed below.

[**0064**] Upon removal of the syringe **238** from the upper conduit **226**, as shown in **FIG. 4**, the seal **216** is free to move toward its decompressed state, and the clam shells **220***a*/**220***b* are pushed proximally toward the opening **230**. The movement causes a general expansion of the inner cavity **218** (i.e., the cavity increases in length), but causes a contraction (i.e., reduction in size) of the volume of the constricted portion **267** of the seal **216**. If the volume change associated with the contraction of the constricted portion **267** equals the volume change associated with the expansion of the inner cavity **218**, the fluid space or inner cavity will have zero flow. If the increase in volume associated with the expansion of the inner cavity **218** is greater than the reduction in volume associated with the contraction of the constricted portion **267**, there will be a net gain in fluid space, resulting in an undesirable negative flow toward the valve **210** through, e.g., a catheter tip (not shown). If the reduction in volume associated with the contraction of the constricted portion **267** is greater than the increase in volume associated with the expansion of the inner cavity **218**, there will be a desirable positive flow from the valve **210** through the catheter tip (not shown). Thus, for the valve **210** to be a positive-flow valve requires that the clam shells be configured to allow greater expansion of the constricted portion **267** (i.e., an increase in fluid volume in that area of the seal **216**) than the general contraction volume change associated with the expansion of the inner cavity **218** of the seal **216** upon compression and, hence, greater contraction (i.e., decrease in fluid volume within that area of the seal) of the constricted portion **267** than the general expansion (i.e., increase in fluid volume in that area of the seal) of the seal **216** upon decompression. In other words, for the valve **210** to induce positive flow upon disconnection of the medical implement **238** therefrom, the total fluid volume within the valve **210** must decrease. In the instant case, this decrease in fluid volume is effectuated by causing the fluid volume within the seal to decrease as between its compressed (when syringe attached) and uncompressed (when syringe detached) states. This reduction or decrease in available fluid volume within the valve **210** causes fluid to flow towards the catheter/patient, preventing blood from being drawn into the catheter.

[**0065**] That the valve **210** is advantageously configured to be a positive-flow valve **210** eliminates any dead space during decompression of the seal **210** as the syringe **238** is withdrawn, as illustrated in **FIG. 4**. Furthermore, as the syringe **238** is withdrawn, the slit **259** remains open until the very end, i.e., until the seal cap **248** is squeezed by the circular opening **230** at the top of the upper conduit **226**. This further assists in eliminating dead space and avoiding backflash. This feature is particularly advantageous in the case where the valve **210** is connected through a catheter to a patient, because it prevents blood from being drawn into the catheter and clogging it. This invention therefore eliminates a significant risk by solving the problem of backflash.

[**0066**] As the seal **216** is free to move to its decompressed state, it essentially fills the opening **230**. The ability of the seal **216** to return to its original shape and be deformed in its decompressed state is determined by the resiliency of the material used to prepare the seal **216**. Advantageously, the ability of the seal **216** to return to its decompressed state is facilitated by the spring **222** and the gaps between the wall portions **258** of the seal **216**. The ability of the seal **216** to deform reversibly and return to its decompressed state is particularly useful because (1) it immediately stops fluid flow through the valve **210**, and (2) it maintains sterility of the valve.

[**0067**] The ability of the seal **216** to return reversibly to its decompressed state permits reuse of the valve **210**. Following disconnection, and before reuse, the surface **250** of the seal cap **248** is essentially flush with the opening **230** of the housing **212**. Thus, this flush surface **250** can advantageously be sterilized with alcohol or other surface-decontaminating substances. The support member **214** and body **212** advantageously shield both connections from the surrounding environment to protect the sterility of the connection.

[**0068**] A cover cap (not shown) can be supplied to fit over the upper conduit **226** as further protection for the surface **250** of the seal cap **248** when not in use. Such a cover cap, however, is not needed to maintain sterility since the seal **216** may be swabbed with a disinfectant before and/or after each use. Reversibility of the seal **216** makes the valve **210** particularly attractive as a connector valve to provide fluid communication between two fluid lines. Therefore, the present invention provides for placing a first fluid line in communication with a second fluid line using the valve **210** disclosed herein. The reversibility of the valve **210** permits multiple fluid lines to be successively added, for example, to a fluid line in direct communication with a patient's vein. Since the valve **210** is easily sterilized and sealable, fluid lines can be added and removed without disconnecting venous contact of the catheter.

[**0069**] The valve body **212** and support member **214** are preferably prepared from a hard plastic, but it is additionally contemplated that the valve **210** could be prepared from other medically inert materials known to those skilled in the art. Another feature of this invention is that it relies neither on a needle nor on a spike in order to establish fluid flow through the valve. This completely eliminates the risk of skin puncture or fear of puncture during use and manufacture. It also eliminates coring of the seal **216** by a spike element and all the risks associated therewith. Further, the fluid flow rate is not limited by the size of a through passage in a needle or spike, as is the case in some prior art valves.

[**0070**] As shown in **FIG. 4**, another feature of the invention is that the upper ledge **234** confines the movement of the shoulder **252** toward the opening **250** to prevent the seal **216** from being blown through the opening **230** under high pressure in the cavity **218**. This makes the valve **210** particularly suited for high pressure applications.

Second Embodiment

[**0071**] In a second embodiment of the present invention illustrated in **FIGS. 6 and 7**, the valve **310** includes a valve body or housing **312**, a support member **314**, a skirt **316**, a seal **318**, a resilient member **320**, and a pair of clam shells

322*a*/**322***b*. The housing **312** is desirably similar to the housing **212** of **FIG. 4** and has a tapered side wall **324**.

[**0072**] Referring to **FIGS. 6 and 7**, the second embodiment of the valve **310** has a bell-shaped skirt **316**. The skirt **316** has an annular ring **328** which is disposed toward an inner conduit **330** of the support member **314**. The skirt **316** creates a shield for the inner conduit **330**. This inner conduit **330** is preferably cylindrical in shape and slightly tapered. The inner conduit may be connected to a terminal end of a catheter (not shown), which has an opposite, open end that is generally inserted into a patient. The support member **314** serves as a support and attachment device for the seal **318** by holding the seal **318** in place inside the housing **312**.

[**0073**] The support member **314** also serves as a support and attachment device for the skirt **316**. As best seen in **FIG. 6**, the support member **314** has an edge portion **332** which engages a ledge **334** of the skirt **316** in assembly. This attachment secures the skirt **316** in place. The skirt **316** desirably includes a Luer-Lock portion **336** that enables the valve **310** to be removably attached to, for example, a fluid line or catheter connected to a patient. It is noted that the valve **310** in this embodiment includes a skirt **316** separate from the housing **312** for ease of assembly. A different embodiment can provide a unitary member which replaces the housing **312** and skirt **316**. It is therefore contemplated that such an embodiment would fall within the scope of this invention.

[**0074**] The seal **318** is similar to the seal **210** of **FIG. 4**. The seal **318** is also preferably silicon and has a similar seal cap **340** with a precut slit **342**, shoulder **344**, and pressure responsive member **348**. These components serve the same function as those of the seal **210**. Instead of a side wall formed with wall portions **258**, the seal **318** has a side wall **350** that is generally circular cylindrical and has a distal portion **352** that is sized to be slip-fitted with the proximal end **354** of the inner conduit **330** of the support member **314**. During compression of the seal **318**, the side wall **350** simply slides over the proximal end **354** of the inner conduit **330**, forming a fluid-tight seal therewith. The seal **318** defines an inner cavity **358** above the proximal end **354** of the inner conduit **330**. The inner cavity **358** forms an expandable fluid space inside the valve **310**. The inner conduit **330** and inner cavity **358** comprise aligned hollow tubes in fluid communication with each other when the precut slit **342** of the seal **318** opens during compression of the seal **310**.

[**0075**] Similar in form and function to the clam shells **220***a*/**220***b* of **FIGS. 4 and 5**, the clam shells **322***a*/**322***b* are constructed to cause an increase in fluid space upon insertion of a medical implement into the valve **310** and a decrease in fluid space upon withdrawal of the medical implement such as a syringe **362** partially shown in phantom in **FIG. 7**. The internal surfaces **364***a*/**364***b* of the clam shells desirably have longitudinal grooves that cooperate with one another to squeeze a portion of the seal side wall **350** to form a constricted portion **366** thereof.

[**0076**] Instead of the spring **222** in **FIG. 4**, the second embodiment employs the resilient member **320** disposed between the clam shells **322***a*/**322***b* and the support member **314**. The resilient member **320** advantageously is inert and impermeable to fluid such as silicon, and includes wall portions **368** which deform in an accordion-like fashion and assist in the reformation of the seal **318** to close the housing opening **370** upon withdrawal of the syringe **362**. The resilient member **320** thus is similar in construction with and serves the same function as the spring **222** of the seal **210** of **FIGS. 4 and 5**. It is contemplated that a spring (not shown) similar to the spring **222** of **FIG. 4** may be used in place of the resilient member **320**, as may other suitable structures known to those of skill in the art.

[**0077**] As shown in **FIGS. 6 and 7**, the resilient member **320** has a base **346**. The base **346** fits snugly and securely within an annular groove **374** provided in the housing **312** and an annular groove **377** provided in the support member **314**, as shown in **FIG. 6**. The annular grooves **376**,**377** hence form a locking mechanism to support and secure the resilient member **320** within the housing **312**. The shoulder **344** engages an upper ledge **382** provided in an upper conduit **384** of the housing **312** such that the upper ledge **382** confines the movement of the shoulder **344** toward the opening **370** to prevent the seal **318** from being blown through the opening **370** under high pressure in the inner cavity **358** of the seal **318**.

[**0078**] The resilient member **320** is desirably relaxed or slightly compressed longitudinally in the decompressed state (**FIG. 6**), and compressed longitudinally in the compressed state (**FIG. 7**). The resilient member **320** is desirably not attached or bonded to either of the clam shells **322***a*/**322***b* or the housing **312**.

[**0079**] **FIG. 7** illustrates compression and **FIG. 6** illustrates decompression during valve activation. In the compressed state, the syringe **362** is placed on the seal cap **340** inside the opening **370** of the housing **312**, and the application of pressure on the syringe **362** creates pressure on the seal cap **340**. The downward pressure pushes the seal cap **340** away from the circular opening **370** and toward the distal lower portion of the housing **312** which has a larger inner diameter, thereby allowing the precut slit **342** to open. The side wall **350** slides over the proximal end **354** of the inner conduit **330**, and the resilient member **320** deforms in an accordion-like manner, storing potential energy of the compression. Fluid is able to flow into the syringe **362**, or vice versa, depending on whether fluid is to be withdrawn from the patient or medication injected into the patient.

[**0080**] The compression of the seal **318** shown in **FIG. 7** generally causes a contraction or reduction in the volume of the inner cavity **358** of the seal **318**. The valve **310** has a net gain in volume of the inner cavity **318**, however, because the general reduction in volume within the inner cavity **358** is less than an increase in volume within the constricted portion **366** of the inner cavity **358** defined by the clam shells **322***a*/**322***b*. The expansion results from the movement of the clam shells **322***a*/**322***b* apart from one another during compression, facilitated by the tapered side wall **324** of the housing **312**.

[**0081**] **FIG. 6** illustrates the valve after withdrawal of the syringe **362**. The seal **318** returns to its decompressed state and essentially fills the opening **370**, and the clam shells **322***a*/**322***b* are pushed proximally toward the opening **370** by the resilient member **320**. Because of the contraction of the inner cavity **358** at the constricted portion **366** by the clam shells **322***a*/**322***b*, there is a net loss or reduction in fluid space, resulting in a positive flow from the valve **310** through, e.g., a catheter tip (not shown). The positive-flow

valve **310** advantageously eliminates any dead space during decompression of the seal **318**. This is further assisted by the seal **318** with the slit **342** remaining open until the very end, i.e., until the seal cap **340** is squeezed by the upper conduit **384**.

[**0082**] In addition, the valve **310** can be reused because the seal **318** can return reversibly in the decompressed state. The seal surface **340** is also swabbable for sterility. Other features of the valve **310** are discussed previously in connection with the first embodiment of this invention and will not be repeated.

Third Embodiment

[**0083**] As shown in **FIGS. 8 and 9**, a third embodiment of the valve **410** of the present invention comprises a valve body or housing **412**, a support member **414**, a flexible tubing **416**, a seal **418**, a ring member **420**, a pair of clam shells **422***a*/**422***b*, and a spring **424**. The flexible tubing **416** may be connected to a catheter (not shown) and, together with the seal **418**, defines an inner cavity **426**. The inner cavity **426** forms an expandable fluid space of the valve **410**. The clam shells **422***a*/**422***b* desirably are substantially the same as the clam shells **220***a*/**220***b* of **FIG. 4** and are constructed to cause the fluid space within the valve **410** to increase upon insertion of a medical implement and to decrease upon withdrawal of the medical implement such as a syringe **428** partially shown in phantom in **FIG. 9**. The housing **412** is desirably similar to the housing **212** of **FIG. 4**.

[**0084**] The support member **414** has a hollow center **430** which supports the flexible tubing, and a proximal end **432** which encloses a distal end **434** of the housing **412**. The support member **414** desirably locks onto the housing **412** via any method known to those of skill in the art. The proximal end **432** of the support member **414** supports the spring **424**, which in turn supports the clam shells **422***a*/**422***b* and seal **418**.

[**0085**] The seal **418** is prepared from a resilient material that is flexible, inert, and impermeable to fluid, such as silicon. Referring to **FIG. 8**, the seal **418** is substantially similar to the seal **210** of **FIG. 4**, with a portion of the side wall **438** cut off near the shoulder **440** region. As a result, the side wall **438** of the seal **418** is substantially shorter than the side wall **254** of the seal **210** in **FIG. 4**. A distal end **442** of the side wall **254** is attached, preferably by adhesive, to a proximal end **444** of the flexible tubing **416**. The distal end **442** abuts the ring member **420** which is disposed between the seal **418** and the clam shells **422***a*/**422***b* and attached at its inner surface **446** to a portion of the tubing **416**, desirably also by adhesive. Other suitable means of attachment may be used. The ring member **420** is desirably made of polycarbon.

[**0086**] The clam shells **422***a*/**422***b* desirably form a sliding contact at their proximal ends with the ring member **420** for ease of assembly, but may alternatively be affixed to the ring member **420** by adhesive or similar means. The clam shells **422***a*/**422***b* are desirably the same as the clam shells **220***a*/**220***b* of **FIG. 4**, having tapered external surfaces **450***a*/**450***b* to cooperate with the tapered side wall portion **452** of the housing **412** for sliding and grooved internal surfaces **454***a*/**454***b* that cooperate with one another to squeeze a portion of the tubing **416** to form a constricted portion **456**.

[**0087**] The spring **424** is substantially the same as the spring **222** of **FIG. 4** and serves the same function, being disposed between the distal ends of the clam shells **422***a*/**422***b* and the proximal end **432** of the support member **414**. In the decompressed state shown in **FIG. 8**, the spring **424** may be relaxed or in slight compression to exert a force on the seal **418** through the clam shells **422***a*/**422***b* to keep the slit **466** in the seal cap **460** closed. During insertion of the syringe **428**, the spring **424** is compressed and stores potential energy from the compression, as illustrated in **FIG. 9**. Upon withdrawal of the syringe **428**, the spring **424** releases the potential energy and pushes the clam shells **422***a*/**422***b* proximally to close the seal **418**, as shown in **FIG. 8**. The spring **424** is preferably not attached or bonded to either the clam shells **422***a*/**422***b* or the support member **414** for ease of assembly. The spring **424** can be a helical spring or any other suitable spring known to those with skill in the art.

[**0088**] **FIG. 9** shows the compressed state of the valve **410** upon insertion of the syringe **428**. In the compressed state, the syringe **428** is placed on the seal cap **460** inside the opening **464** of the housing **412** and the application of pressure on the syringe **428** creates pressure on the seal cap **460**. The downward pressure pushes the seal cap **460** away from the circular opening **464** and toward the distal end of the housing **412**, which has a larger inner diameter, thereby allowing the precut slit **466** of the seal cap **460** to open. The resilient tubing **416** and the clam shells **422***a*/**422***b* also move distally as the spring **424** deforms in compression, storing potential energy. Fluid is able to flow into the syringe **428**, or vice versa, depending on whether fluid is to be withdrawn from the patient or medication injected into the patient.

[**0089**] The compression of the seal **418** shown in **FIG. 9** generally causes a reduction in the volume of the inner cavity **426** formed by the seal **418** and tubing **416**. However, because of an expansion of the constricted portion **456** defined by the clam shells **422***a*/**422***b* an increase in fluid volume is created which is greater than the general reduction in fluid volume within the inner cavity **426**, the valve **410** has a net gain in fluid volume. The increase in fluid volume results from the movement of the clam shells **422***a*/**422***b* apart from one another during seal compression, facilitated by the tapered side wall **452** of the housing **412** and resiliency of the tubing **416**.

[**0090**] **FIG. 8** illustrates the valve **410** after withdrawal of the syringe **428**. The seal **418** returns to its decompressed state and essentially fills the opening **464**, and the clam shells **422***a*/**422***b* are pushed proximally toward the opening **464** by the spring **424**. Because of the contraction of the inner cavity **426** at the constricted portion **456** by the clam shells **422***a*/**422***b*, there is a net loss in fluid space, resulting in a positive flow from the valve **410** through, e.g., a catheter tip (not shown). The positive-flow valve **410** advantageously eliminates any dead space during decompression of the seal **418**. This is further assisted by the seal **418**, with the slit **466** remaining open until the very end, i.e., until the seal cap **460** is squeezed by upper conduit **470**.

[**0091**] In addition, the valve **410** can be reused because the seal **418** can return reversibly to the decompressed state. The seal surface **472** is also swabbable for sterility. Other features of the valve **410** are discussed previously in connection with the earlier embodiments of this invention and will not be repeated.

Fourth Embodiment

[0092] A fourth embodiment of the present invention is illustrated in **FIGS. 10 and 11**. As illustrated therein, a valve **510**, comprises a valve body or housing **512**, a support member **514**, a skirt **516**, a retaining member **518**, a seal **520**, a pair of clam shells **522***a*/**522***b*, and a resilient member **524**. The valve **510** has several features that are the same or similar to those of the valve **310** of **FIGS. 8 and 9**, having a similar resilient member **524** and clam shells **522***a*/**522***b*. The clam shells **522***a*/**522***b* have internal surfaces **526***a*/**526***b* that cooperate with one another to squeeze a portion of the seal side wall **528** to form a constricted portion **530** thereof.

[0093] The seal **510** is preferably made of silicon and has a seal cap **532** with a precut slit **534**, shoulder **536**, lower lip **538**, and pressure responsive member **540** that are similar to the seal **210** of **FIG. 4**. These components serve the same function as those of the seal **210**. The side wall **528** may be formed with ringed wall portions **258**, as in the seal **210**, but **FIG. 4** shows the side wall **528** that is generally circular cylindrical. The seal **520** defines an inner cavity **542** which forms an expandable fluid space inside the valve **510**. During compression of the seal **520**, the side wall **528** deforms outwardly into a circumferential cusp or bulge **544** in the unconstricted region between the clam shells **522***a*/**522***b* and the support member **514**. The side wall **528** returns to its decompressed shape upon decompression of the seal **520**. The seal **520** is desirably relaxed longitudinally in the decompressed state (**FIG. 10**), and compressed longitudinally in the compressed state (**FIG. 11**). Alternatively, the seal **520** may be stretched longitudinally in tension by the resilient member **524** in the decompressed state and be relaxed or slightly compressed longitudinal in the compressed state.

[0094] Referring to **FIG. 10**, the skirt **516** is a bell-shaped skirt that is similar to the skirt **316** of **FIG. 8**. The skirt **516** creates a shield for an inner conduit **548** of the support member **514**. The inner conduit **548** may be connected to a terminal end of a catheter (not shown) which has an open end that is generally inserted into a patient. The support member **514** serves as a support and attachment device for the seal **520** by holding the seal **520** in place inside the housing **512**.

[0095] The support member **514** also serves as a support and attachment device for the skirt **516**. Similar to the valve **310** of **FIG. 8**, the support member **514** shown in **FIG. 10** has an edge portion **550** which engages a ledge **552** of the skirt **516** in assembly. This attachment secures the skirt **516** in place. The skirt **516** desirably includes a Luer-Lock portion **554** that enables the valve **510** to be removably attached to, for example, a fluid line or catheter connected to a patient.

[0096] The retaining member **518** is desirably provided to secure the lower lip **538** of the seal **520** and support the resilient member **524**. The retaining member **518** is held inside the housing **512** by the support member **514**, and is provided for ease of assembling the valve **510**. The retaining member **518** has an annular groove **556**, and the support member **514** has an annular groove **558**. The annular grooves **556**,**558** form a locking mechanism to support and secure the seal **520** within the housing **512** by engaging the lower lip **538** snugly with the grooves **556**,**558**. It is noted that a different embodiment may provide a unitary member which replaces the support member **514** and the retaining member **518**. It is therefore contemplated that such an embodiment would fall within the scope of this invention.

[0097] **FIG. 11** illustrates compression and **FIG. 10** illustrates decompression during valve activation. In the compressed state, a medical implement such as the syringe **562** partially shown in phantom is placed on the seal cap **532** inside the opening **564** of the housing **512**, and the application of pressure on the syringe **562** creates pressure on the seal cap **532**. The downward pressure pushes the seal cap **532** away from the circular opening **564** and toward the lower portion of the housing **512**, which has a larger inner diameter, thereby allowing the precut slit **534** to open. The side wall **528** deforms outwardly at the unconstricted region into a circumferential cusp **544**, and the resilient member **524** deforms in an accordion-like manner, storing potential energy of the compression. Fluid is able to flow into the syringe **562**, or vice versa, depending on whether fluid is to be withdrawn from the patient or medication injected into the patient.

[0098] The compression of the seal **520** shown in **FIG. 11** generally causes a reduction in the fluid volume of the inner cavity **542** of the seal **520**. The valve **510** has a net gain in volume of the inner cavity **542**, however, because the general reduction in volume within the inner cavity **542** is less than the increase in volume within the constricted portion **530** as defined by the clam shells **522***a*/**522***b* and of the cusp **544** at the unconstricted region of the seal **520**.

[0099] **FIG. 10** illustrates the valve **510** after withdrawal of the syringe **562**. The seal **520** returns to its decompressed state and essentially fills the opening **564**, and the clam shells **522***a*/**522***b* are pushed back up toward the opening **564** by the resilient member **524**. Because of the contraction of the inner cavity **542** of the seal **520**, there is a net loss in fluid space, resulting in a positive flow from the valve **510** through, e.g., a catheter tip (not shown). The positive-flow valve **510** advantageously eliminates any dead space during decompression of the seal **520**. This is further assisted by the seal **520**, with the slit **534** remaining open until the very end, i.e., until the seal cap **532** is squeezed by the circular opening **564** at the top of the upper conduit **570**.

[0100] In addition, the valve **510** can be reused because the seal **520** can return reversibly in the decompressed state. The seal surface **572** is also swabbable for sterility. Other features of the valve **510** are discussed previously in connection with the earlier embodiments of this invention.

Fifth Embodiment

[0101] **FIGS. 12 and 13** show a fifth embodiment valve **610** in accordance with the present invention, the valve **610** comprising a valve body or housing **612**, a seal **614**, a ring member **616**, and a spring **618**. The housing **612** is similar to the housing **212** of **FIG. 4**, with a circular opening **620**, and a tapered side wall **622**, but may have a straight side wall instead. The seal **614** is similar to the seal **318** of **FIG. 8**, having a substantially cylindrical side wall **624** and defining an inner cavity **626** which forms an expandable fluid space inside the valve **610**. The side wall **624** may have different and variable thickness (not shown). The components are dimensioned and configured to cause the fluid space to expand upon insertion of a medical implement and to contract upon withdrawal of the medical implement such as

a syringe **630** partially shown in phantom in **FIG. 13**. The distal portion of the seal **614** is connected to a fluid line such as a catheter (not shown), and may be secured to the housing by means known to those with skill in the art, such as by the use of a support member (not shown) similar to the support member **214** shown in **FIG. 15**.

[**0102**] The ring member **616** is desirably an annular disk **616** made of a hard plastic and disposed between a shoulder **634** of the seal **614** and a proximal end **636** of the spring **618**. The ring member **616** serves as a constraint for the seal **614** during compression and efficiently transfers the compressive force to the spring **618**, assisting in the deformation of the seal **614**. During decompression, the ring member **616** efficiently transfers the spring force to the seal cap **638** of the seal **614** to close the opening **620**. Although the ring member **616** facilitates the deformation and reformation of the seal **614**, it is not necessary for the seal **614** to work. In that case, the spring **618** will contact the seal cap **638** directly.

[**0103**] The spring **618** is substantially the same as the spring **222** of **FIG. 4** and serves the same function, being disposed between the ring member **616** and a distal end **642** of the housing **612**. In an alternative embodiment, the distal end **642** may be a separate component from the housing **612** for ease of assembly. In the decompressed state shown in **FIG. 12**, the spring **618** may be relaxed or be in slight compression to exert a force on the seal **614** through the ring member **616** to keep the seal **614** closed. During insertion of the syringe **630**, the spring **618** is compressed and stores potential energy from the compression, as illustrated in **FIG. 13**. Upon withdrawal of the syringe **630**, the spring **618** releases the potential energy and pushes the ring member **616** to close the seal **616** as shown in **FIG. 12**. The spring **618** is preferably not fixed with either the ring member **616** or the distal end **642** of the housing **612** for ease of assembly. The spring **618** can be a helical spring or any other suitable spring known to those with skill in the art.

[**0104**] The side wall **624** of the seal **614** is constrained by the ring member **616** and housing **612**, and is substantially relaxed in the decompressed state. During compression of the seal **614**, the side wall **624** bulges in the unconstrained region between the ring member **616** and the distal end **642** of the housing **612**, causing an increase in the fluid space within the valve **610**. The side wall **624** returns to its decompressed shape upon decompression of the seal **614**. Alternatively, the side wall **624** may be stretched in tension by the spring **618** in the decompressed state and goes through a relaxed position before deforming under compression to its bulged condition.

[**0105**] **FIG. 13** illustrates compression and **FIG. 12** illustrates decompression during valve activation. In the compressed state, the syringe **630** is placed on the seal cap **638** inside the opening **620** of the housing and the application of pressure on the syringe **630** creates pressure on the seal cap **638**. The downward pressure pushes the seal cap **638** and the ring member **616** away from the circular opening **620** and toward the lower portion of the housing **612** which has a larger inner diameter, thereby allowing the precut slit **646** of the seal cap **638** to open. The side wall **624** deforms outwardly and bulges at the unconstricted region, as the spring **618** is compressed, storing potential energy of the compression. Fluid is able to flow into the syringe **630**, or vice versa, depending on whether fluid is to be withdrawn from the patient or medication injected into the patient. The compression of the seal **614** shown in **FIG. 13** results in a net gain in volume of the inner cavity.

[**0106**] **FIG. 12** illustrates the valve **610** after withdrawal of the syringe **630**. The seal **614** returns to its decompressed state and essentially fills the opening **620**, and the ring member **616** is pushed back up toward the opening **620** as the spring **618** releases its potential energy. Because of the contraction of the inner cavity **626** of the seal **614**, there is a net loss in fluid space, resulting in a positive flow from the valve **610** through, e.g., a catheter tip (not shown). The positive-flow valve **610** advantageously eliminates any dead space during decompression of the seal **614**. This is further assisted by the seal **614** with the slit **646** remaining open until the very end, i.e., until the seal cap **638** is squeezed by the circular opening **620** at the top of the upper conduit **650** of the housing **612**.

[**0107**] In addition, the valve **610** can be reused because the seal **614** can return reversibly in the decompressed state. The seal surface **652** is also swabbable for sterility. Other features of the valve **610** are discussed previously in connection with the earlier embodiments of this invention.

Sixth Embodiment

[**0108**] A sixth embodiment of a valve **710** is illustrated in **FIGS. 14 and 15**. The valve **710** comprises a valve body or housing **712** and a seal **714**. The housing **712** has an upper conduit **716** near a proximal end with a circular opening **718** that is preferably adapted to receive a medical implement. A side wall portion **720** is protruded to facilitate deformation of the seal **714**. A distal end **724** of the housing **712** forms a lower passage **726** (partially shown) which supports and constrains a distal portion **728** of the seal **714**, and is connected, for example, to a fluid line such as a catheter (not shown). Alternatively, a support member (not shown) may be used to detachably lock onto the housing **712** and support the seal **714**, such as those shown in **FIG. 4 (214)** or **FIG. 12 (514)**.

[**0109**] The seal **714** is generally similar to the seal **614** of **FIGS. 12 and 13**, and has a substantially cylindrical side wall **721**, although the side wall **732** may have a slight bulge **733** as shown in **FIG. 14**. It defines an inner cavity **734** which forms an expandable fluid space inside the valve **710**. In the decompressed state, the seal **714** is constrained by the upper conduit **716** and lower passage **726** of the housing **712**, and is substantially relaxed in the decompressed state. The components are dimensioned and configured to cause the fluid space to expand or increase upon insertion of the medical implement and to contract or decrease upon withdrawal of the medical implement such as the syringe **730** partially shown in phantom in **FIG. 15**. During compression of the seal **714**, the side wall **732** bulge in the unconstrained region between the upper conduit **716** and lower passage **726** and the bulge **738** is substantially round. The side wall **732** return to its decompressed shape upon decompression of the seal **714**.

[**0110**] **FIG. 15** illustrates compression and **FIG. 14** illustrates decompression during valve activation. In the compressed state, the syringe **730** is placed on the seal cap **742** of the seal **714** inside the opening **718** of the housing **712** and the application of pressure on the syringe **730** creates pressure on the seal cap **742**. The downward pressure pushes

the seal cap **742** away from the circular opening **718** and toward the protruded portion **720** of the housing **712** which has a larger inner diameter, thereby allowing the precut slit **746** of the seal cap **742** to open. The side wall **732** deforms outwardly and bulges at the unconstricted region **738**, storing potential energy of the compression. Fluid is able to flow into the syringe **730**, or vice versa, depending on whether fluid is to be withdrawn from the patient or medication injected into the patient. The compression of the seal **714** shown in **FIG. 15** generates a net gain in volume of the inner cavity.

[**0111**] **FIG. 14** illustrates the valve **710** after withdrawal of the syringe **730**. The seal **714** returns to its decompressed state and essentially fills the opening **718**. Because of the contraction of the inner cavity **734** of the seal, there is a net loss in fluid space, resulting in a positive flow from the valve **710** through, e.g., a catheter tip (not shown). The positive-flow valve **710** advantageously eliminates any dead space during decompression of the seal **714**. This is further assisted by the seal **714** with the slit **746** remaining open until the very end, i.e., until the seal cap **742** is squeezed by the circular opening **718** at the top of the upper conduit **716**.

[**0112**] In addition, the valve **710** can be reused because the seal **710** can return reversibly in the decompressed state. The seal surface **748** is also swabbable for sterility. Other features of the valve **710** are discussed previously in connection with the earlier embodiments of this invention.

Seventh Embodiment

[**0113**] **FIGS. 16 and 17** illustrate a valve **710** in accordance with a seventh embodiment of the present invention, the valve **756** comprising a valve body or housing **758** and a seal **760** that are substantially the same as the housing **712** and seal **714** of **FIGS. 14 and 15**, with a distal portion **762** of the seal **760** connected to a fluid line such as a catheter (not shown). The seal **760**, however, is configured to deform upon compression into a diamond-shaped cusp **764** instead of a round bulge **738** as illustrated in **FIGS. 14 and 15**. This type of construction may facilitate deformation and reformation of the seal **760**, and may be more easily formed. The valve activation of this embodiment is virtually identical to that in **FIGS. 14 and 15**, except for the deformed shape of the seal side wall **770**. It is contemplated, therefore, that a seal that may deform into a variety of shapes other than round and diamond shapes to achieve positive flow may be employed, as long as the it is dimensioned and configured to cause the fluid space of the valve to expand upon insertion of a medical implement and to contract upon withdrawal of the medical implement such as the syringe **774** partially shown in phantom in **FIG. 28**.

Eighth Embodiment

[**0114**] As illustrated in **FIGS. 18 and 19**, an eighth embodiment valve **810** of the present invention is similar to the embodiments shown in **FIGS. 14-17**. The valve **810** also includes a housing **812** having an internal cavity **814** with an upper conduit **816**, and a seal **818** disposed inside the internal cavity **814** and having an inner cavity **820** that defines a fluid space. The housing **812** has a distal end **824** which supports a side wall **826** of the seal **818**. A distal portion **828** of the seal **818** is connected to a fluid line such as a catheter (not shown). The pressure at the inner cavity **820** of the seal **818** is P1. Between the housing **812** and the seal **818** is an enclosed pressure chamber **832** at pressure P2. The valve activation utilizes the pressure difference between P2 in the pressure chamber **832** and P1 in the inner cavity **820** of the seal **818**.

[**0115**] Upon insertion of a medical implement such as a syringe **836** shown in phantom in **FIG. 19**, the pressure at the inner cavity **820** of the seal **818** increases from P1 to P3 and the fluid space inside the seal **818** expands from the decompressed state of **FIG. 18**. The expansion of the fluid space results primarily from a difference in pressure between P3 and P2. This valve **810** is particularly advantageous in the case where the side wall **826** of the seal **818** deforms without storing substantial potential energy. For instance, the side wall **826** of the seal **818** may deform without substantial resistance or resiliency such as a membrane, or the seal is not constrained longitudinal by the distal portion **824** of the housing **812** and may slide in and out of the internal cavity **814** of the housing **812** through the distal end **824**.

[**0116**] **FIG. 19** illustrates compression and **FIG. 18** illustrates decompression during valve activation. In the compressed state, the syringe **836** is placed on the seal cap **838** of the seal **818** inside the opening **840** of the housing **812** and the application of pressure on the syringe creates pressure on the seal cap **838**. The downward pressure pushes the seal cap **838** away from the circular opening **840** and toward the lower portion of the housing **812** which has a larger inner diameter, thereby allowing the precut slit **844** of the seal cap **838** to open. The entry of the fluid causes the pressure at the inner cavity **814** of the seal **812** to increase to P3. As a result, the side wall **826** deforms outwardly and bulges at the unconstricted region **848**. Potential energy is stored in the change in pressure differential between the inner cavity **820** and the pressure chamber **832**. The side wall **826** of the seal **818** need not deform and store energy, but may do so. Fluid is able to flow into the syringe **836**, or vice versa, depending on whether fluid is to be withdrawn from the patient or medication injected into the patient. The compression of the seal **818** shown in **FIG. 19** causes a net gain or increase in fluid volume within the inner cavity.

[**0117**] **FIG. 18** illustrates the valve **810** after withdrawal of the syringe **836**. The seal **818** returns to its decompressed state and essentially fills the opening **840**, and the pressure in the inner cavity **820** returns to P1 and releases the potential energy. Because of the contraction of the inner cavity **820** of the seal **818**, there is a net loss in fluid space, resulting in a positive flow from the valve **810** through, e.g., a catheter tip (not shown). The positive-flow valve **810** advantageously eliminates any dead space during decompression of the seal **818**. This is further assisted by the seal **818** with the slit **844** remaining open until the very end, i.e., until the seal cap **838** is squeezed by the circular opening **840** at the top of the upper conduit **816**.

[**0118**] In addition, the valve **810** can be reused because the seal **818** can return reversibly in the decompressed state. The seal surface **854** is also swabbable for sterility. Other features of the valve **810** are discussed previously in connection with the earlier embodiments of this invention.

Ninth Embodiment

[**0119**] A ninth embodiment of a valve **910** comprising a housing **912**, a support member **914**, a skirt **916**, a seal **918**,

and a scissor-like cross member **920**, is depicted in **FIGS. 20 and 21**. The housing **912** has an upper conduit **924** with a circular opening **926**. The support member **914** has an inner conduit **928** which is connected to a fluid line such as a catheter (not shown). The seal **918** has a side wall **930** desirably formed of alternating wall portions **932** and defines an inner cavity **934** which forms an expandable fluid space inside the valve **910**. The cross member **920** is dimensioned and configured to assist in causing the fluid space to expand upon insertion of a medical implement and to contract upon withdrawal of the medical implement such as the syringe **936** partially shown in phantom in **FIG. 21**.

[**0120**] The cross member **920** has two longitudinal member **940** attached together which rotates with respect to one another, and is desirably made of a hard material such as a hard plastic. The cross member **920** is disposed at a constricted portion **942** of the seal **918** within the inner cavity **934** with the longitudinal members **940** preferably substantially disposed vertically. The ends **944** of the longitudinal members **940** are desirably attached to the side wall **930** as shown in **FIG. 20**. The longitudinal members **940** rotate to a substantially horizontal orientation upon compression by the insertion of the syringe **936** as shown in **FIG. 21**. This rotation is referred to as the deformation of the cross member **920**. The longitudinal members **940** may be attached to rotate freely with respect to one another. Alternatively, the longitudinal members **940** may be spring-loaded or attached such that they rotate under a rotational force but reform to their relaxed position upon release of the force. Upon withdrawal of the syringe **936** as shown in **FIG. 20**, the longitudinal members **940** return to the substantially vertical positions, referred to as the reformation of the cross member **920**. The longitudinal members **940** are desirably longitudinal plates **940** with sufficient width to expand the constricted portion **942** of the seal **918** in the substantially horizontal position but not so wide that they impedes flow therethrough. Alternatively, they may contain holes (not shown) through which fluid can pass.

[**0121**] **FIG. 21** illustrates compression and **FIG. 20** illustrates decompression during valve activation. In the compressed state, the syringe **926** is placed on the seal cap **950** of the seal **918** inside the opening **926** of the housing **912** and the application of pressure on the syringe **936** creates pressure on the seal cap **950**. The downward pressure pushes the seal cap **950** away from the circular opening **926** and toward the lower portion of the housing **912** which has a larger inner diameter, thereby allowing the precut slit **952** of seal cap **950** to open. The side wall **930** of the seal **918** deforms in an accordion-like manner, and the cross member **920** deforms and opens up the constricted portion **922** of the seal **918**, storing potential energy of the compression. Fluid is able to flow into the syringe **936**, or vice versa, depending on whether fluid is to be withdrawn from the patient or medication injected into the patient. The compression of the seal **918** and deformation of the cross **920** shown in **FIG. 21** generally causes a contraction of the volume of the inner cavity **934** of the seal **918**. The valve **910** has a net gain in volume of the inner cavity **934**, however, because the general contraction of the inner cavity **934** is less than by the expansion of the constricted portion **942** pushed apart by the cross member **920**. The expansion results from the movement of the longitudinal members **940** of the cross member **920** during compression.

[**0122**] **FIG. 20** illustrates the valve **910** after withdrawal of the syringe **936**. The seal **918** returns to its decompressed state and essentially fills the opening **926**, and the cross member **920** reforms to allow the constricted region **942** of the seal **918** to narrow. Because of the contraction of the inner cavity **934** at the constricted portion **942**, there is a net loss in fluid space, resulting in a positive flow from the valve **910** through, e.g., a catheter tip (not shown). The positive-flow valve **910** advantageously eliminates any dead space during decompression of the seal **918**. This is further assisted by the seal **918** with the slit **952** remaining open until the very end, i.e., until the seal cap **950** is squeezed by the circular opening **926** at the top of the upper conduit **924**.

[**0123**] In addition, the valve **910** can be reused because the seal **918** can return reversibly in the decompressed state. The seal surface **960** is also swabbable for sterility. Other features of the valve **910** are discussed previously in connection with the earlier embodiments of this invention.

Tenth Embodiment

[**0124**] **FIGS. 22 and 23** illustrate a valve **1010** in accordance with a tenth embodiment of the present invention, the valve **1010** comprising a valve body or housing **1012**, a support member **1014** (partially shown), a seal **1016**, a ring member **1018**, a resilient reel **1020**, and a scissor-like cross member **1022**. The support member **1014** has an inner conduit (not shown) which is connected to a fluid line such as a catheter (not shown). The seal **1016** has a seal cap **1028** with slit **1030**, shoulder **1032**, and pressure responsive member **1034**.

[**0125**] The ring member **1018** forms a sliding contact with a distal end **1036** of the seal **1016** and is preferably made from a hard plastic. The ring member **1018** desirably has a shoulder **1038** which is constrained by a ledge **1040** of the housing **1012** in the upward direction. The distal end of the ring member **1018** contacts an upper flange **1044** of the resilient reel **1020** and facilitates transfer of the compressive force due to insertion of a medical implement to cause deformation of the reel **1020**. The reel **1020** is made from a material that is flexible, inert, and impermeable to fluid, such as silicon. It has a lower flange **1046** that is supported and secured by the support member **1014** and a central body portion **1048** that is substantially cylindrical. The seal **1016**, ring member **1018**, and resilient reel **1020** define an inner cavity **1050** which forms an expandable fluid space inside the valve **1010**.

[**0126**] The cross member **1022** is substantially the same of the cross member **920** of **FIGS. 20 and 21** and is dimensioned and configured to assist in causing the fluid space to increase upon insertion of a medical implement and to decrease upon withdrawal of the medical implement such as the syringe **1054** partially shown in phantom in **FIG. 23**. The cross member **1022** has two longitudinal members **1056** rotatably attached together. The cross member **1022** is disposed adjacent the central body portion **1048** of the reel **1020** within the inner cavity **1050** with the longitudinal members **1056** preferably pointed toward the vertical direction and desirably attached to the central body portion **1048** at its four ends **1058** as shown in **FIG. 22**. The longitudinal members **1056** rotate to a substantially horizontal orientation upon compression by the insertion of the syringe **1054** as shown in **FIG. 23**. This rotation is referred to as the

deformation of the cross member **1022**. The longitudinal members **1050** may be attached to rotate freely with respect to one another. Alternatively, the longitudinal members **1056** may be spring-loaded or attached such that they rotate under a rotational force but reform to their relaxed position upon release of the force. Upon withdrawal of the syringe **1056** as shown in **FIG. 22**, the longitudinal members **1056** return to the substantially vertical positions, referred to as the reformation of the cross member **1022**. The longitudinal members **1026** are desirably longitudinal plates **1056** with sufficient width to open up the central body portion **1048** of the reel **1020** in the substantially horizontal position but not so wide that they impedes flow therethrough. Alternatively, they may contain holes (not shown) through which fluid can pass.

[**0127**] **FIG. 23** illustrates compression and **FIG. 22** illustrates decompression during valve activation. In the compressed state, the syringe **1054** is placed on the seal cap **1028** inside the opening **1062** of the housing **1012** and the application of pressure on the syringe **1054** creates pressure on the seal cap **1028**. The downward pressure pushes the seal cap **1028** away from the circular opening **1062** and toward the lower portion of the housing **1012** which has a larger inner diameter, thereby allowing the precut slit **1030** to open. The ring member **1018** moves toward the support member **1014** and compresses the resilient reel **1020**. The upper flange **1044** of the resilient reel **1020** is pushed by the ring member **1018** toward the lower flange **1046**. The central body portion **1048** bulges outwardly as the cross member **1022** deforms, storing potential energy of the compression. Fluid is able to flow into the syringe **1054**, or vice versa, depending on whether fluid is to be withdrawn from the patient or medication injected into the patient.

[**0128**] The compression of the seal **1016** and deformation of the cross **1022** shown in **FIG. 23** generally causes a reduction in the volume of the inner cavity of the seal **1016**. The valve **1010** has a net gain in volume of the inner cavity **1050**, however, because the expansion of the central body portion **1048** of the flexible reel **120** causes an increase in fluid volume which reduction resulting in is greater than the general contraction of the inner cavity **1050**. The expansion results from the movement of the longitudinal members **1056** of the cross member **1022** to open up the central body portion **1048** of the resilient reel **1020** during compression.

[**0129**] **FIG. 22** illustrates the valve **1010** after withdrawal of the syringe **1054**. The seal **1016** returns to its decompressed state and essentially fills the opening **1062**, and the cross member **1022** reforms to allow the central body region **1048** of the resilient reel **1022** to narrow. Because of the contraction of the inner cavity **1050** at the central body portion **1048**, there is a net loss in fluid space, resulting in a positive flow from the valve **1010** through, e.g., a catheter tip (not shown). The positive-flow valve **1010** advantageously eliminates any dead space during decompression of the seal **1016**. This is further assisted by the seal **1016** with the slit **1030** remaining open until the very end, i.e., until the seal cap **1028** is squeezed by the circular opening **1062** at the top of the upper conduit **1066** of the housing.

[**0130**] In addition, the valve **1010** can be reused because the seal **1016** can return reversibly in the decompressed state. The seal surface **1068** is also swabbable for sterility. Other features of the valve **1010** are discussed previously in connection with the earlier embodiments of this invention.

Eleventh Embodiment

[**0131**] An eleventh embodiment of a valve **1110** in accordance with the present invention is illustrated in **FIGS. 24 and 25**, and comprises a valve body or housing **1112** and a seal **1114**. The housing **1112** has an upper conduit **1116** near a proximal end with a circular opening **1118** that is preferably adapted to receive a medical implement such as a syringe **1120** partially shown in phantom in **FIG. 25**. The housing **1112** has a lower conduit **1124** (partially shown) near a distal end which is connected to a fluid line such as a catheter (not shown). Disposed between the upper conduit **1116** and lower conduit **1124** are protruded right and left side walls **1126***a*,**1126***b* connected to resilient ribbed portions **1128***a*,**1128***b* which allow the side walls **1126***a*,**1126***b* to be stretched outwardly and reform inwardly in a substantially horizontal direction. Aside from the resilient ribbed portions **1128***a*,**1128***b*, the rest of the housing **1112** is desirably made of a firm material such as a hard plastic.

[**0132**] The seal **1114** is generally similar to the seal **318** of **FIG. 6** with a similar shoulder **1132**, seal cap **1134**, and pressure responsive element **1136**. The cylindrical side wall **350** of **FIG. 6**, however, is replaced with a spreader **1140**, which includes two legs **1142***a*,**1142***b* that extend from the shoulder **1132** outwardly at distal ends **1144***a*,**1144***b* that bear against the protruded right and left side walls **1126***a*, **1126***b*, as best seen in **FIG. 24**. The distal end **1144***a* may be attached to the protruded side wall **1126***a*, and the distal end **1144***b* may be attached to the protruded side wall **1126***b*, by adhesives or other available means. An inner cavity **1150** is formed by the seal **1114** and a distal portion **1152** of the housing **1112**, and defines a fluid space of the valve **1110**. During compression of the seal **1114**, the spreader **1140** extends further outwardly and pushes the protruded side walls **1126***a*,**1126***b* outwardly. The seal **1114** and housing **1112** are configured and dimensioned to assist in causing the fluid space to expand upon insertion of the medical implement **1120** and to contract upon withdrawal of the medical implement **1120**.

[**0133**] **FIG. 25** illustrates compression and **FIG. 24** illustrates decompression during valve activation. In the compressed state, the syringe **1120** is placed on the seal cap **1134** inside the opening **1118** of the housing **1112** and the application of pressure on the syringe **1120** creates pressure on the seal cap **1134**. The downward pressure pushes the seal cap **1134** away from the circular opening **1118** and toward the lower portion of the housing **1112** which has a larger inner diameter, thereby allowing the precut slit **1156** oft he seal cap **1134** to open. The spreader **1140** extends outwardly, stretching the resilient ribbed portions **1128***a*,**1128***b* and pushing the protruded right and left side walls **1126***a*,**1126***b* of the housing **1112** outwardly, storing potential energy of the compression. Fluid is able to flow into the syringe **1120**, or vice versa, depending on whether fluid is to be withdrawn from the patient or medication injected into the patient. The compression of the seal **1114** and deformation of the spreader **1140** shown in **FIG. 36** results in a net gain in volume of the inner cavity **1150**.

[**0134**] **FIG. 24** illustrates the valve **1110** after withdrawal of the syringe **1120**. The seal **1114** returns to its decompressed state and essentially fills the opening **1118**, and the spreader **1140** and resilient ribbed portions **1128***a*,**1128***b* reform to allow the protruded right and left side walls

1126*a*,**1126***b* to move inwardly. Because of the contraction of the inner cavity **1150**, there is a net loss in fluid space, resulting in a positive flow from the valve **1110** through, e.g., a catheter tip (not shown). The positive-flow valve **1110** advantageously eliminates any dead space during decompression of the seal **1114**. This is further assisted by the seal **14** with the slit **1156** remaining open until the very end, i.e., until the seal cap **1134** is squeezed by the circular opening **1156** at the top of the upper conduit **1116**.

[**0135**] In addition, the valve **1110** can be reused because the seal **1114** can return reversibly in the decompressed state. The seal surface **1160** is also swabbable for sterility. Other features of the valve **1110** are discussed previously in connection with the earlier embodiments of this invention.

Twelfth Embodiment

[**0136**] A twelfth embodiment valve **1210** is illustrated in **FIGS. 26 and 27**, and comprises a valve body or housing **1212**, a support member **1214** (partially shown), a seal **1216**, a ring member **1218**, and a resilient reel **1226**. The housing **1212**, support member **1214**, and ring member **1218** are substantially the same as those shown in **FIGS. 22 and 23**. The housing **1212** has an upper conduit **1224** with a circular opening **1226**. The support member **1214** has an inner conduit (not shown) which is connected to a fluid line such as a catheter (not shown). The distal end **1228** of the ring member **1218** contacts an upper flange **1232** of the resilient reel **1220** and facilitates transfer of the compressive force due to insertion of a medical implement such as a syringe to cause deformation of the reel **1220**. The reel **1220** further includes a central body portion **1234** and a lower flange **1236** that is desirably supported and secured by the support member **1214**.

[**0137**] The seal **1216** is similar to the seal **1114** of **FIGS. 24 and 25**, and has a similar seal cap **1240** with slit **1242**, shoulder **1244**, and pressure responsive member **1246**. The seal **1246** has a spreader **1250** that extends from the shoulder **1244** outwardly and forms a circular distal ring **1252** that bears against the central body portion **1234** of the resilient reel **1220**, as best seen in **FIG. 26**. The distal ring **1252** may be attached to the central body portion **1234** by adhesives or other available means. An inner cavity **1254** is formed by the seal **1216** and a distal portion **1256** of the resilient reel, and defines a fluid space of the valve **1210**. During compression of the seal **1216**, the spreader **1250** extends further outwardly and pushes the central body portion **1234** of the resilient reel **1220** outwardly. The seal **1216** and resilient reel **1220** are configured and dimensioned to assist in causing the fluid space to increase upon insertion of a medical implement and to decrease upon withdrawal of the medical implement such as the syringe **1260** partially shown in phantom in **FIG. 27**.

[**0138**] **FIG. 27** illustrates compression and **FIG. 26** illustrates decompression during valve activation. In the compressed state, the syringe **1260** is placed on the seal cap **1240** inside the opening **1226** of the housing **1212** and the application of pressure on the syringe **1260** creates pressure on the seal cap **1240**. The downward pressure pushes the seal cap **1240** away from the circular opening **1226** and toward the lower portion of the housing **1212** which has a larger inner diameter, thereby allowing the precut slit **1242** to open. The ring member **1218** moves toward the support member **1214** and compresses the resilient reel **1220**. The upper flange **1232** of the resilient reel **1220** is pushed by the ring member **1214** toward the lower flange **1236**. The central body portion **1234** bulges outwardly as the spreader **1250** deforms and pushes the central body portion **1234** outwardly, storing potential energy of the compression. Fluid is able to flow into the syringe **1260**, or vice versa, depending on whether fluid is to be withdrawn from the patient or medication injected into the patient.

[**0139**] The compression of the seal **1216** and deformation of the spreader **1250** and reel **1220** shown in **FIG. 27** causes an increase in volume of the inner cavity **1254** because of the expansion of the central body portion **1234** of the flexible reel **1220**. The expansion results from the movement of the spreaders **1250** to open up the central body portion **1234** of the resilient reel **1220** during compression.

[**0140**] **FIG. 26** illustrates the valve **1210** after withdrawal of the syringe **1260**. The seal **1216** returns to its decompressed state and essentially fills the opening **1226**, and the spreader **1250** reforms to allow the central body region **1234** of the resilient reel **1220** to narrow. Because of the contraction of the inner cavity **1254** at the central body portion **1234**, there is a net loss in fluid space, resulting in a positive flow from the valve **1210** through, e.g., a catheter tip (not shown). The positive-flow valve **1210** advantageously eliminates any dead space during decompression of the seal **1216**. This is further assisted by the seal **1216** with the slit **1242** remaining open until the very end, i.e., until the seal cap **1240** is squeezed by the circular opening **1226** at the top of the upper conduit **1224**.

[**0141**] In addition, the valve **1210** can be reused because the seal **1216** can return reversibly in the decompressed state. The seal surface **1266** is also swabbable for sterility. Other features of the valve **1210** are discussed previously in connection with the earlier embodiments of this invention.

Thirteenth Embodiment

[**0142**] A thirteenth embodiment valve **1310** in accordance with the present invention is illustrated in **FIGS. 28 and 29**. The valve **1310** comprises a body or housing **1312**, a support member **1314** (partially shown), an upper seal **1316**, and a lower seal **1318**. The housing **1312** has an upper conduit **1322** near a proximal end with a circular opening **1324** that is preferably adapted to receive a medical implement such as a syringe **1326** partially shown in phantom in **FIG. 40**. The body **1312** has an upper side wall **1330** distal to the upper conduit **1322** that is desirably circular in cross section with a diameter larger than the diameter of the circular opening **1324**. The body **1312** has a lower side wall **1332** distal to the upper side wall **1330** with a diameter larger than the diameter of the upper side wall **1330**. A middle conduit **1338** is advantageously formed between the upper side wall **1330** and lower side wall **1332**. The upper side wall **1330** is advantageously tapered from the upper conduit **1322** to the middle conduit **1338** and the lower side wall **1332** is advantageously tapered from the middle conduit **1338** to a distal end **1340** of the housing **1312**. The middle conduit **1338** has a diameter larger than the diameter of the upper conduit **1322** and smaller than the diameter of the distal end **1340** of the housing **1312**.

[**0143**] The support member **1314** has at its distal end an inner conduit (not shown) which may be connected to a

terminal of a catheter (not shown). The support member **1314** serves as a support and attachment device for the upper and lower seals **1316**, **1318** by holding the seals **1316**, **1318** in place inside the internal cavity **1346** of the housing **1312**.

[**0144**] The upper and lower seals **1316**, **1318** are prepared from a resilient material that is flexible, inert, and impermeable to fluid, such as silicon. The upper seal **1316** has a seal cap **1350** with a generally flat top surface **1352**, a shoulder **1354**, a side wall **1356**, and a base **1358**. The side wall **1356** advantageously is comprised of ringed wall portions **1360** which deform in an accordion-like fashion and assist in the reformation of the seal **1316** to enclose the housing opening **1324** upon withdrawal of the syringe **1326**. During compression of the upper seal **1316**, the diameter of the ringed wall portions **1360** expand outwardly in the radial direction. The interior of the upper seal **1316** is hollow to provide an upper inner cavity **1362**, as best seen in **FIG. 28**. The shoulder **1354** engages an upper ledge **1366** provided in the upper conduit **1322** of the housing **1312** such that the upper ledge **1366** confines the movement of the shoulder **1354** toward the opening **1324** to prevent the upper seal **1316** from being blown through the opening **1324** under high pressure in the upper inner cavity **1362** of the seal **1316**,

[**0145**] The seal cap **1350** of the upper seal **1316** reseals in the valve **1310** at the opening **1324** with the top surface **1352** of the seal **1316** flush with or above the opening **1324** upon removal of the medical implement **1326**. The seal cap **1350** substantially fills the opening **1324** in the top of the upper conduit **1322**. It is preferred the top surface **1352** be exposed after assembly so that it may be swabbed with alcohol or other disinfectant. The seal cap **1350** of the upper seal **1316** desirably has a unique shape with a precut slit **1370** such that the seal cap **1350** is squeezed shut by the opening **1324** when assembled and the slit **1370** opens automatically during compression. The seal **1316** desirably also includes a pressure responsive member **1372** to further assist in creating a fluid-tight seal in the decompressed state.

[**0146**] As shown in **FIGS. 28 and 29**, the lower seal **1318** desirably is generally similar to the upper seal **1316**. The lower seal has a similar seal cap **1380** with a generally flat top surface **1382**, a shoulder **1384**, and a side wall **1386**. The side wall **1386** defines a lower inner cavity **1390** and may include similar ringed wall portions (not shown). The seal cap **1380** is disposed at the middle conduit **1338** at the decompressed state and reseals the lower inner cavity **1390** at the middle conduit **1338** upon removal of the medical implement **1326**. The lower inner cavity **1390** forms a fluid space of the valve **1310**, being in fluid communication through the lower conduit (not shown) to, e.g., a catheter (not shown). The valve components are configured and dimensioned to assist in causing the fluid space to increase upon insertion of the medical implement **1326** and to decrease upon withdrawal of the medical implement **1326**.

[**0147**] The seal cap **1380** advantageously provides a fluid tight seal, having a shape and a precut slit **1394** similar to those of the upper seal **1316**. The lower seal **1318** also includes desirably a pressure responsive member **1396** similar to the pressure responsive member **1372** of the upper seal **1316**. The components of the lower seal **1318** are generally larger than those of the upper seal **1316** because of the geometry of the valve housing **1312**.

[**0148**] To illustrate valve activation, **FIG. 29** shows the compressed state of the valve **1310** upon insertion of the syringe **1326**. The syringe **1326** is placed on the upper seal cap **1350** inside the opening **1324** of the housing **1212**. The application of pressure on the syringe **1326** creates pressure on the seal cap **1330**, and the resulting downward pressure compresses the upper seal **1316**. This pushes the seal cap **1350** away from the circular opening **1324** and toward the middle conduit **1338** at a region with a larger inner diameter, thereby allowing the precut slit **1370** to open. The downward movement is facilitated by the compression of the ringed wall portions **1360** of the side wall **1356** of the upper seal **1316**. The downward force is transferred to the lower seal **1318** through the base **1358** of the upper seal **1316** which cooperates with the seal cap **1380** of the lower seal **1318**. The application of the pressure pushes the lower seal cap **1380** away from the middle conduit **1338** and toward the lower portion of the housing **1312** which has a larger inner diameter, thereby allowing the precut slit **1394** to open. Fluid is now able to flow into the syringe **1326**, or vice versa, depending on whether fluid is to be withdrawn from the patient or medication injected into the patient. **FIG. 29** shows the valve **1310** opened by insertion of the syringe **1326** into the opening **1324**.

[**0149**] In the compressed state shown in **FIG. 29**, the fluid space generally contract under pressure from the decompressed state shown in **FIG. 28**. Upon removal of the syringe **1326** from the upper conduit **1322**, as shown in **FIG. 28**, the upper and lower seals **1316**,**1318** are free to move toward their decompressed states. The movement normally would cause a general expansion of the fluid space. However, because of the fluid communication between the upper inner cavity **1362** and lower inner cavity **1390**, and the closing of the precut slit **1394** of the lower seal **1318** upon compression, a decrease in volume results in the lower inner cavity **1390** of the valve **1310**. The decrease in the fluid space advantageously generates a positive flow from the valve **1310** through, e.g., a catheter tip (not shown) to eliminate dead space. Advantageously, any dead space within the upper inner cavity **1362** is also minimized since, as the syringe **1326** is withdrawn, the slit **1370** remains open until the very end, i.e., until the seal cap **1350** is squeezed by the circular opening **1324** at the top of the upper conduit **1322**. The elimination of backflash is particularly advantageous in the case where the valve **1310** is connected through a catheter to a patient, because it prevents the introduction of blood into the catheter.

[**0150**] As the upper seals **1316** is free to move to its decompressed state, it essentially fills the circular opening **1324**. The ability of the upper seal **1316** to return reversibly to its decompressed state, together with the resiliency of the lower seal **1318**, permits the reuse of the valve **1310**. Following disconnection, and before reuse, the surface **1352** of the seal cap **1316** is essentially flush with the opening **1324** of the housing **1312**. Thus, this flush surface **1352** can advantageously be sterilized with alcohol or other surface decontaminating substances. A cover cap (not shown) can further be used to fit over the upper conduit to protect the surface **1352** of the seal cap **1350**.

Fourteenth Embodiment

[**0151**] A fourteenth embodiment of a valve **1410** of the present invention is illustrated in **FIGS. 30 and 32**, and comprises a valve body or housing **1412**, a seal **1414**, a piston **1416**, and a spring **1418**. The housing **1412** has an

upper conduit **1420** near a proximal end with a circular opening **1422** that is preferably adapted to receive a medical implement such as a syringe **1423** partially shown in phantom in **FIG. 30**. The housing **1412** has a side conduit **1424** which is connected to a fluid line such as a catheter (not shown). Disposed in a lower chamber **1426** of the housing **1412** is the spring **1418** supporting the piston **1416** which bears against a distal end **1430** of the seal **1414** disposed in an upper chamber **1432** of the housing **1412**. The lower chamber **1426** of the housing **1412** advantageously includes an orifice **1434** for venting the air therein to facilitate movement of the spring **1418**. The upper chamber **1432** and lower chamber **1426** expand and contract according to the movement of the piston **1416** under pressure from the seal **1414** and the spring **1418**. The housing **1412** advantageously includes a side aperture **1438** additional fluid to be transferred to the patient through the upper chamber **1432** and side conduit **1424** when necessary.

[**0152**] The seal **1414** has seal cap **1442** with precut slit **1444**, a shoulder **1446**, and a pressure responsive member **1448**. The seal has a side wall **1450** which defines an inner cavity **1452** and has the distal end **1430** that cooperates with the piston **1416** for efficient transfer of pressure between them. Near the distal end **1430** of the seal **1414** is desirably a transverse fluid passage **1456** for fluid communication between the seal **1414** and the upper chamber **1432**. Although **FIGS. 30 and 32** illustrate that the transverse fluid passage **1456** also facilitates fluid flow between the side aperture **1438** and the side conduit **1424**, it need not do so if fluid can flow around the seal **1414** in the upper chamber **1432**. The upper chamber **1432** and the inner cavity **1450** of the seal **1414** forms the fluid space of the valve **1410**.

[**0153**] **FIG. 31** illustrates compression and **FIG. 30** illustrated decompression during valve activation. In the compressed state, the syringe **1423** is placed on the seal cap **1442** inside the opening **1422** of the housing **1412** and the application of pressure on the syringe **1423** creates pressure on the seal cap **1442**. The downward pressure pushes the seal cap **1442** away from the circular opening **1422** and toward the lower portion of the housing **1412** which has a larger inner diameter, thereby allowing the precut slit **1444** to open. The side wall **1450** moves further into the upper chamber **1432** and pushes the piston **1476** downward against the spring **1418**, which is compressed, storing potential energy of the compression. Fluid is able to flow into the syringe **1423**, or vice versa, depending on whether fluid is to be withdrawn from the patient or medication injected into the patient. The compression of the seal **1414** shown in **FIG. 42** generates a net gain or increase in volume of the fluid space of the valve **1410**.

[**0154**] **FIG. 30** illustrates the valve **1410** after withdrawal of the syringe **1423**. The seal **1414** returns to its decompressed state and essentially fills the opening **1422**, and the piston **1416** moves back to its decompressed position as the spring **1418** releases its potential energy. Because of the contraction of the upper chamber **1432** of the housing **1412**, there is a net loss in fluid space, resulting in a positive flow from the valve **1410** through, e.g., a catheter tip (not shown). The positive-flow valve **1410** advantageously eliminates any dead space during decompression of the seal **1414**. This is further assisted by the seal **141** with the slit **1444** remaining open until the very end, i.e., until the seal cap **1442** is squeezed by the circular opening **1422** at the top of the upper conduit **1420**.

[**0155**] In addition, the valve **1410** can be reused because the seal **1414** can return reversibly in the decompressed state. The seal surface **1460** is also swabbable for sterility. Other features of the valve **1410** are discussed previously in connection with the earlier embodiments of this invention.

Additional Embodiments

[**0156**] Additional embodiments of the present invention are contemplated without departing from the spirit and scope of the present invention. For instance, the volume inside a straight tubing contracts when the tube is bent. Thus, one valve embodiment valve may have a fluid space inside a straight tubing which bends upon insertion of a medical implement and reforms upon withdrawal of the medical implement, thereby effecting positive flow.

[**0157**] In addition, many of the ringed side wall of the seals (such as the portions **1360** of the seal **1316** of **FIG. 28**) can be replaced by circular tires **1580** stacked in series one on top of an adjacent larger-diameter lower tire, as illustrated in **FIG. 32**. The circular tires **1580** are preferably solid throughout the diameter of the cross-section thereof. Like the ringed side wall portions **1360**, these circular tires **1580** will deform and reform upon, respectively, compression and decompression of the seal.

CONCLUSION

[**0158**] In the embodiments described above, the fluid space inside the valve increases upon insertion of a medical implement in the compressed state and decreases upon withdrawal of the medical implement in the decompressed state. In some embodiments, the structure defining the fluid space is substantially relaxed and does not store substantial amount of potential energy. Insertion of the medical implement causes a change in the structure that allows it to store potential energy. The potential energy is released upon withdrawal of the medical implement and the structure returns to a substantially relaxed condition. In other embodiments, at least some components of the structure defining the fluid space stores potential energy under strain or deformation. Upon insertion of a medical implement in the compressed state, the potential energy in those components is released and is stored in other components of the structure or in another form. The stored potential energy in the compressed state is released when the medical implement is removed, and the original potential energy is restored in the structure.

[**0159**] The above presents a description of the best mode contemplated of carrying out the present invention, and of the manner and process of using it, in such full, clear, concise, and exact terms as to enable any person skilled in the art to which it pertains to make and use this invention. This invention is, however, susceptible to modifications and alternate constructions from that discussed above which are fully equivalent. In particular, many of the features of the co-pending applications, serial nos. and can be incorporated into the present invention, and these applications are incorporated herein by reference. The embodiments described are meant to be illustrative and not exhaustive. Consequently, it is not the intention to limit this invention to the particular

embodiments disclosed. On the contrary, the intention is to cover all modifications and alternate constructions coming within the spirit and scope of the invention as generally expressed by the following claims, which particularly point out and distinctly claim the subject matter of the invention.

What is claimed is:

1. A medical valve for controlling the flow of fluid between a first medical implement and a second medical implement, said valve comprising:

a body having a cavity in fluid communication with a second medical implement and an opening adapted to receive a first medical implement;

a sealing element positioned within said body and movable between a first position in which said sealing element prevents fluid flow through said cavity and a second position in which fluid flow is permitted through said cavity, said cavity including a fluid space which automatically and reversibly increases in size when said first medical implement is connected to said valve and which contracts in size when said first medical implement is disconnected, said sealing element including a rigid piston movably mounted with respect to said body; and

a ledge positioned within said cavity, said sealing element having a shoulder engaging said ledge when said sealing element moves into said first position.

* * * * *