Oct. 4, 1955 D. B. TSCHUDY 2,719,318

NOZZLE RAISING DEVICE FOR SUCTION CLEANERS

Filed Sept. 1, 1951 2 Sheets-Sheet 1

FIG. 1

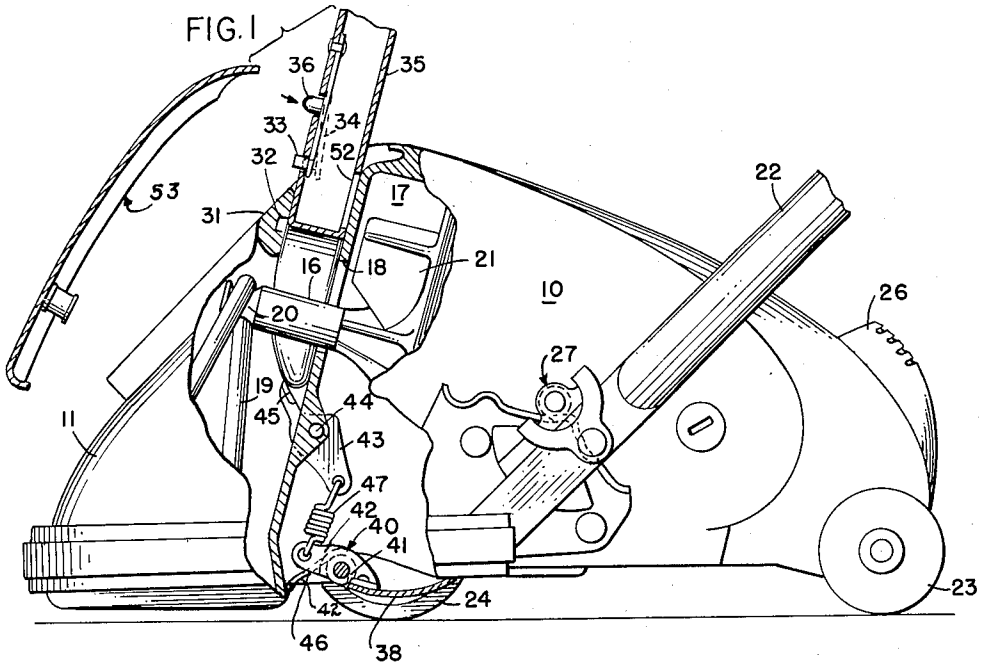

FIG. 2

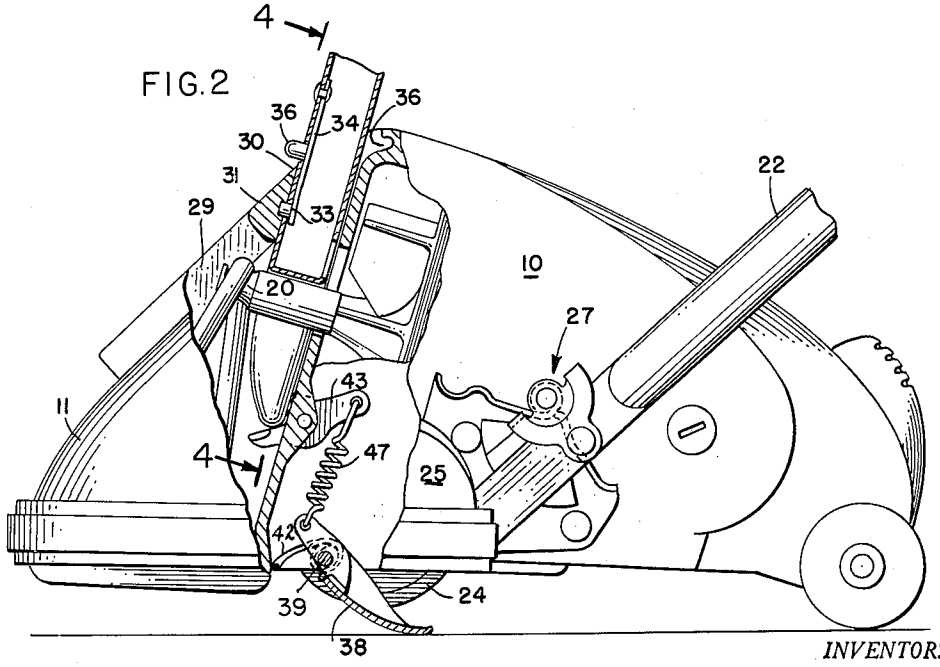

INVENTOR:
DONALD B. TSCHUDY
BY
Harry J. Semaree
ATTORNEY

Oct. 4, 1955 D. B. TSCHUDY 2,719,318

NOZZLE RAISING DEVICE FOR SUCTION CLEANERS

Filed Sept. 1, 1951 2 Sheets-Sheet 2

FIG. 3

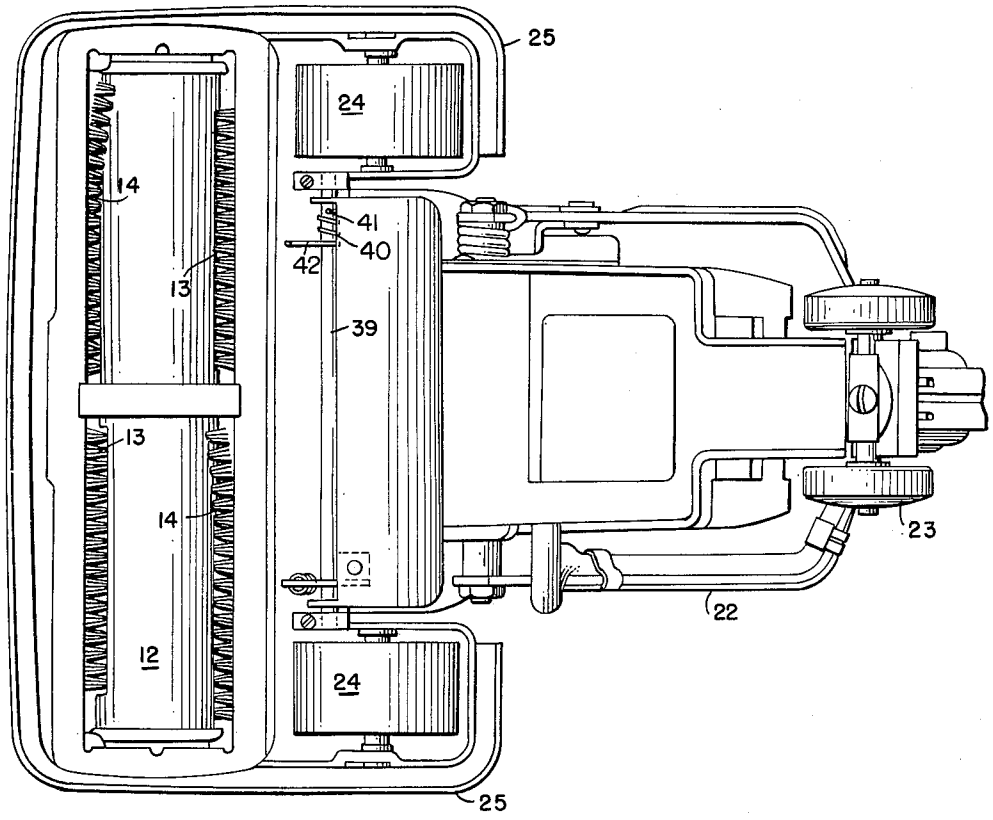

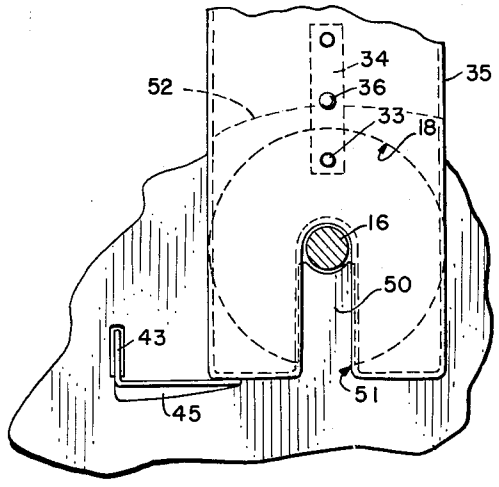

FIG. 4

INVENTOR:
DONALD B. TSCHUDY
BY Harry S Demaree
ATTORNEY

United States Patent Office

2,719,318

Patented Oct. 4, 1955

2,719,318

NOZZLE RAISING DEVICE FOR SUCTION CLEANERS

Donald B. Tschudy, Canton, Ohio, assignor to The Hoover Company, North Canton, Ohio, a corporation of Ohio

Application September 1, 1951, Serial No. 244,781

9 Claims. (Cl. 15—333)

This invention relates to suction cleaners and more particularly to a new and improved construction by which the cleaner can be converted between on-the-floor and off-the-floor operation very simply and expeditiously.

The most convenient location for the converter port on a suction cleaner is the top, forward portion of the suction nozzle. However, there are a variety of problems confronting the designer when so locating the converter port. If the converter tool is to be inserted axially into the fan eye through the front wall of the nozzle, it is necessary to first remove the agitator belt, or to provide some means of by-passing the belt. Numerous arrangements employing both of these methods have been proposed but none is as convenient or as satisfactory as is desired. Other designers have proposed constructions for inserting the converter perpendicularly to the belt shaft at a point between the rear of the belt and the fan eye. These have certain advantages but make no provision for rendering the agitator harmless to carpets while the cleaner is being used for off-the-floor cleaning.

The present invention provides a simple, inexpensive and easily operated arrangement by which the cleaner is converted to off-the-floor operation without disturbing the agitator drive and at the same time protecting the carpet against possibility of injury from the agitator. This is accomplished by a normally retracted skid device which is spring stressed as an incident to the insertion of the converer tool so as to elevate and support the forward end of the cleaner appreciably above the carpet so long as the converter is in place. Withdrawal of the converter removes the stress on the spring for the skid device and restores the cleaner to support by the front wheels.

Accordingly, it is an object of the invention to provide a new and improved cleaner which is readily convertible between on-the-floor and off-the-floor operation.

Another object is the provision of a cleaner in which insertion of the converter tool automatically lowers a skid device to support the suction nozzle at an elevated position so long as the converter is in place and which operates to restore the nozzle to its previous operating level upon withdrawal of the converter.

Yet another object is the provision of a substitute support for the forward end of a cleaner whenever the same is converted to off-the-floor operation.

Still another object is the provision of means which is conditioned to elevate the nozzle as an incident to the downward insertion of a converter tool through the top of the nozzle.

Numerous other objects and advantages of the invention will become apparent from the following detailed specification taken in connection with the accompanying drawings, in which:

Figure 1 is a side view of a cleaner with parts broken away and showing the position of parts when the converter tool is partially inserted and as it begins to lower the skid support;

Figure 2 is a view similar to Figure 1, but showing the converter fully inserted and the nozzle supported by the skid;

Figure 3 is a bottom plan view of Figure 1; and

Figure 4 is a view along line 4—4 on Figure 2.

The single embodiment herein illustrated comprises a suction cleaner having a main body **10** provided with the usual suction nozzle **11** across its forward end. Rotatably supported by the end walls of the suction nozzle is a rotary agitator **12** having the usual litter pick-up brushes **13** and beater bars **14—14** disposed along its outer surface, as clearly appears from Figure 3. Any suitable type of electric motor is housed in the rear end of body **10** and has a shaft **16** extending forwardly through a fan chamber **17** which communicates with the suction nozzle through a fan eye **18**. A rubber driving belt **19** encircles the midportion of the agitator and its upper end is supported on a driving pulley **20** carried at the outer end of shaft **16**. A radial blade suction fan **21** is mounted on shaft **16** within the fan chamber and discharges the air through an upwardly extending discharge tube at the left hand side of the fan chamber in a manner well known in the art. The usual cloth filter bag may be connected to the air discharge tube. The upper end of the filter is supported on the propelling handle, the lower bail portion **22** of which is indicated in the drawings.

The cleaner body is supported on a pair of rear wheels **23** and a pair of front carrier wheels **24** which are housed in skirts **25**, **25** cast integrally with the rear wall of the suction nozzle. A foot operated push button **26** is carried at the rearmost end of the cleaner casing and serves to operate a push-push type switch for the motor. A handle position control device generally indicated at **27** is mounted on the side of the cleaner body and cooperates with the handle bail to control the operating position and storage positions of the handle. Since this feature forms no part of the present invention, it will not be further described.

The converter facilities forming an important feature of the invention will now be described. As will be best understood by reference to Figure 2, the top forward portion of the suction nozzle is provided with two openings. Lower opening **29** is positioned opposite the end of pulley **20** and serves as an access opening through which the belt may be placed on or removed from the pulley. A second opening **30** opens vertically through the topmost portion of the suction nozzle and provides a converter port through which the converter tool may be inserted when it is desired to use the cleaner for off-the-floor cleaning purposes.

Opening **29** is preferably separated from port **30** by a horizontal rib **31** having a notch **32** on its inner wall to receive a latch pin **33** carried on leaf spring **34** mounted on the inner front wall of converter tool **35**. A button **36** secured to the spring projects through an opening in the converter so as to be conveniently accessible to the operator for the purpose of operating latch pin **33**.

Openings **29** and **30** are preferably covered normally by a closure plate **53** having a curved upper end engageable in recess **36** for the purpose of holding the upper end of the cover in place. The lower, underside of the cover is provided with spring detent members which engage the side walls of opening **29** to releasably hold the cover in air tight engagement with openings **29** and **30** so long as the cleaner is in use for on-the-floor cleaning.

The means for supplanting carrier wheels **24**, **24** in supporting the front end of the cleaner during off-the-floor operation comprises a plate like skid member **38** pivotally supported on the underside of the cleaner body by a shaft **39** located parallel to and just rearwardly of the rear wall of the suction nozzle. This skid is normally held in the

retracted position indicated in Figure 1 by a torsion spring **40** encircling the shaft **39** and having one end **41** engaging the rear wall of the skid and its other end **42** resting against the rear wall of the suction nozzle. Spring **40** is comparatively light but is of sufficient strength to hold the skid and its connecting linkage in the retracted position so long as the converter tool is not in place in the cleaner.

The operating mechanism for lowering the skid and elevating the forward end of the nozzle during off-the-floor cleaning comprises a lever **43** pivoted on a pin **44** located in an opening extending through the rear wall of the nozzle to one side of the fan chamber. The inner end of lever **43** includes an extension **45** which projects horizontally toward the center line of the cleaner and into the path of the lower end of converter tool **35**, as will be best understood by reference to Figure 4. The other end of lever **43** is connected to a bracket **46** by means of a relatively strong tension spring **47**. The forward end of bracket **46** is secured to skid **38**, as clearly shown in the drawings.

Normally, spring **47** is untensioned or substantially so and skid member **38** is held retracted by torsion spring **40**, as indicated in Figure 1. However, when the converter tool is fully seated, it acts to hold lever **43** rotated counterclockwise to the position shown in Figure 2, wherein spring **47** is under sufficient tension to hold skid **38** in its lowermost position wherein the suction nozzle is held elevated from one quarter to one half inch above its normal operating height.

The converter tool may take many forms. In its simplest form it comprises an open ended tubular member **35**. The lower end of the tool is forked to straddle shaft **16**, so that an opening **52** on the rear side of the converter registers with fan eye **18** when the converter is locked in place by spring detent **33**, **34**. The open ended slot **51** in the converter tool is closed during off-the-floor cleaning by a tongue **50** formed integrally with the rear wall of the suction nozzle and extending vertically to a point closely adjacent the underside of shaft **16**. This tongue has a width somewhat greater than slot **51** in the converter tool and cooperates with the rear edges of slot **51** to seal the suction nozzle from the fan chamber.

Operation

Let us assume that the cleaner is in use for on-the-floor cleaning. Skid **38** will then be in the retracted position shown in Figure 1 and the converter cover will be in place over openings **29** and **30**.

To convert to off-the-floor cleaning the operator grasps the lower edge of the converter cover and lifts it upwardly to detach it from recess **36**. The forked end of the converter tool **35** is then inserted downwardly through port **30** so as to straddle pulley shaft **16**. As the lower left hand corner engages extension **45** on the forward end of lever **43**, this lever is rotated counterclockwise to tension spring **47** and pivot skid **38** clockwise about shaft **39**. Since the stress thus imposed on spring **47** is somewhat greater than the weight carried by the front carrier wheels **24**, **24** this stored energy is available to pivot skid member **38** downwardly and raise nozzle **11** and agitator **12** to the elevated, non-carpet cleaning position shown in Figure 2 as soon as latch **33** engages in notch **32** and as soon as the operator removes downward pressure applied to the cleaner as an incident to the insertion of the converter. Opening **52** in the rear wall of the converter is then in registery with fan eye **18** and the suction air flow is confined to the converter tool itself and the fan chamber.

Usually, the downward pressure applied to the converter tool by the operator acts through lever **43** to hold the front end of the cleaner fully supported on wheels **24**; however, as soon as the operator releases her hold on the converter tool, the energy stored in spring **47** pivots skid **38** downward to a further extent and lifts the suction nozzle completely off the carpet to a position in which it is impossible for the rotating agitator to injure the carpet. As a result, so long as the cleaner is converted to off-the-floor operation, spring **47** cooperates with skid **38** and rear wheels **23**, **23** to hold the cleaner in the inclined position illustrated in Figure 2.

The usual flexible hose and cleaning tools are then coupled to the upper end of the converter tool and the operator proceeds to clean in the usual manner pulling the cleaner about the room on skid **38** and rear wheels **23**. The propelling handle may be left in its inclined rest position indicated in the drawings or, if desired, it may be raised to the vertical storage position. The operation of the cleaner is controlled by the push-push motor switch which opens or closes each time button **26** is depressed by the foot.

To reconvert to on-the-floor cleaning, the operator merely depresses button **36** to release the converter tool whereupon it is withdrawn from the converter port. As this occurs, spring **47** is free to collapse leaving torsion spring **40** free to retract skid **38** and return lever **43** and spring **47** to its untensioned position as shown in Figure 1. It will thus be clear that, as the tool is withdrawn, the suction nozzle is automatically restored to its normal on-the-floor operating position. The only remaining operation is to replace the converter cover so that its upper end is located in recess **36** and the springs on its lower end cooperate with the edges of opening **29** to hold it firmly seated over openings **29** and **30**. The cleaner is now fully restored to its original on-the-floor operating condition.

While I have shown but a single modification of my invention it is to be understood that this modification is to be taken as illustrative only and not in a limiting sense. I do not wish to be limited to the particular structure shown and described but to include all equivalent variations thereof except as limited by the scope of the claims.

I claim:

1. The combination with a suction cleaner having a front and rear wheel supported body provided with a suction nozzle in front of said front wheels, a motor driven suction fan communicating with said nozzle, a rotary agitator having a driving connection with said fan, of means for converting said cleaner from on-the-floor to off-the-floor operation including a converter port opening through the wall of said suction nozzle and leading to the inlet for said suction fan, normally retracted supporting means movably mounted on said cleaner for supplanting said front wheels in supporting said cleaner during off-the-floor operation, converter operated means connected with said normally retracted supporting means including a spring of sufficient strength when stressed by the insertion of the converter to support the weight of the front end of said cleaner, said converter operated means having a portion thereof positioned in the path of a converter tool as it is inserted through said port and being movable thereby to stress said spring so that said stressed spring is then operative to lower said normally retracted supporting means and hold said agitator out of contact with the carpet so long as the cleaner is converted to off-the-floor operation.

2. The combination defined in claim 1 wherein said normally retracted supporting means comprises a skid member extending crosswise of said cleaner and pivotally supported thereon at a point adjacent said front wheels.

3. The combination defined in claim 1 wherein said converter operated spring means includes a lever pivotally supported on the wall of said suction nozzle, said lever having one end positioned in the path of a converter tool as the latter is inserted through said port and having its other end connected to said skid member through a normally relaxed tension spring.

4. The combination with a suction cleaner having a front and rear wheel supported body provided with a suction nozzle in front of said front wheels, a motor driven suction fan communicating with said suction nozzle through an inlet, a rotary agitator connected with said fan so as to be driven whenever said fan is driven, of means for converting said cleaner from on-the-floor to off-the-

floor operation comprising, a converter port in the front wall of said nozzle at a point overlying said fan inlet for receiving a converter tool downwardly therethrough, a skid member pivoted crosswise of said cleaner at a point rearward of said suction nozzle, means for normally holding said member retracted out of contact with the carpet, lever means including a normally relaxed spring connected to said skid member and cooperable therewith to elevate said agitator out of contact with the carpet during off-the-floor cleaning, said lever means having a portion thereof located in the path of a converter as it is inserted through said port and being operable on the insertion of a converter tool through said port to stress said normally relaxed spring whereby the energy so stored therein is operative to lower said skid member as the operator removes downward pressure on said cleaner incident to the insertion of said converter tool.

5. The combination defined in claim 4 wherein the withdrawal of said converter tool releases the stress on said normally relaxed spring and allows said means for normally holding said skid member retracted to become operative and return said member to a position out of contact with the carpet.

6. The combination with a suction cleaner having a body provided with a suction nozzle at the forward end thereof, front and rear supporting wheels for said body, a motor driven suction fan on said body having an axis extending longitudinally of said body, a belt pulley on the forward end of the shaft for said fan, a rotary agitator in said nozzle, a belt extending between said agitator and said pulley, said belt being spaced forwardly of an inlet opening into said fan from said nozzle, a converter port through the front wall of said nozzle extending downwardly to said fan inlet, temporary supporting means including a spring for supplanting said front wheel in supporting said suction nozzle during off-the-floor cleaning, means for normally holding said temporary supporting means retracted, said temporary supporting means having a portion thereof located in the path of said converter tool as the same is connected to said fan inlet for stressing said spring and biasing said supporting means sufficiently for the energy so stored in the spring to elevate said nozzle and agitator out of contact with a carpet while a converter tool is connected to said fan inlet.

7. The combination defined in claim 6 wherein said converter tool is connectable to said fan inlet by the unidirectional insertion thereof through said converter port, and cooperating means on said tool and on said cleaner for holding said tool locked in place in said cleaner during off-the-floor cleaning.

8. The combination defined in claim 6 wherein said converter port extends downwardly through said front nozzle wall from a point overlying said pulley shaft so that a converter tool inserted through said opening into registry with said fan inlet occupies the space between said inlet and the rear side of said agitator driving belt.

9. The combination with a suction cleaner having a wheel supported body provided with a suction nozzle carrying a rotary agitator at the forward end thereof, a motor-driven suction fan in said body having an inlet communicating with said nozzle, a belt extending between said fan and agitator for driving the latter, a converter port in said nozzle for receiving a converter tool arranged to register with said fan inlet when it is desired to use said cleaner for off-the-floor cleaning, elevating means on said cleaner operable to hold said nozzle and agitator in an elevated non-carpet cleaning position while said converter is connected with fan inlet comprising, temporary nozzle supporting means movably mounted on said cleaner, a converter actuated member movably mounted on said cleaner in the path of the converter as the same is inserted through said port, normally relaxed spring means interconnecting said temporary supporting means and said converter actuated member, means for normally holding said temporary supporting means retracted whereby the insertion of a converter tool through said port is operable to contact and move said converter actuated member and stress said spring means sufficiently to lower said temporary nozzle supporting means and elevate the nozzle and agitator out of contact with a carpet so long as the converter is connected to said cleaner for off-the-floor operation, and means for locking a converter in place in said port.

References Cited in the file of this patent

UNITED STATES PATENTS

2,080,480	Hoover	May 18, 1937
2,584,495	Osborn	Feb. 5, 1952