C. R. JENKS AND R. O. YOUNG.

MIXING DEVICE.

APPLICATION FILED JULY 16, 1921.

1,400,553.

Patented Dec. 20, 1921.

2 SHEETS—SHEET 1.

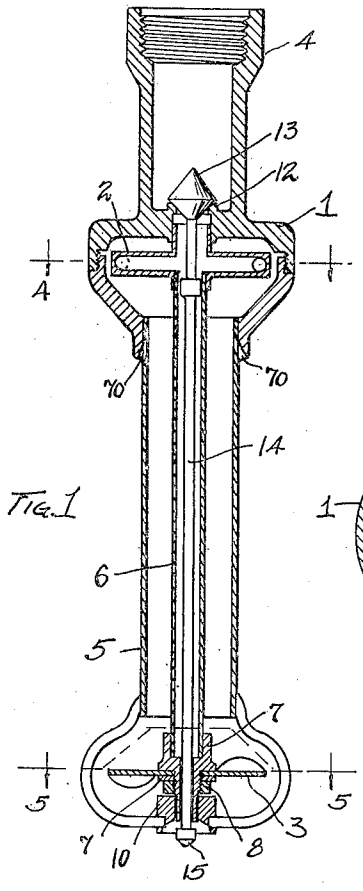

FIG. 1

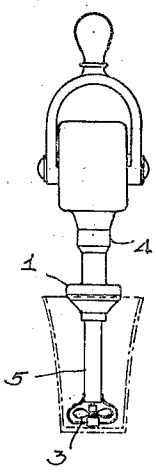

FIG. 2

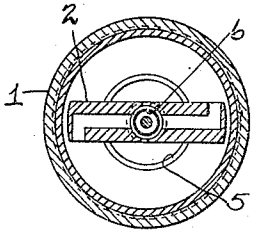

FIG. 4

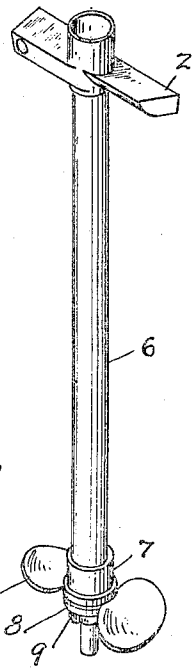

FIG. 3

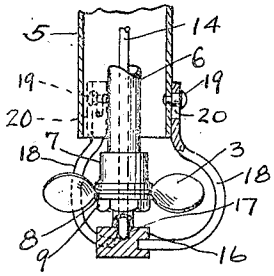

FIG. 6

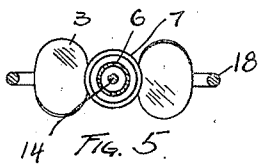

FIG. 5

INVENTORS

Roy O. Young and

BY Charles Robert Jenks

Ray, Oberlin & Ray

ATTORNEYS

C. R. JENKS AND R. O. YOUNG.

MIXING DEVICE.

APPLICATION FILED JULY 16, 1921.

1,400,553.

Patented Dec. 20, 1921.

2 SHEETS—SHEET 2.

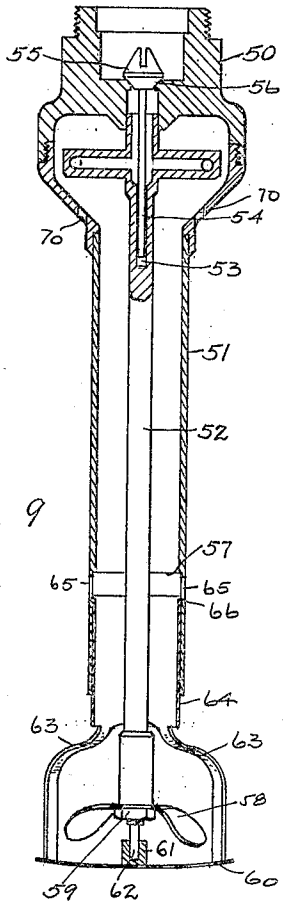

FIG. 9

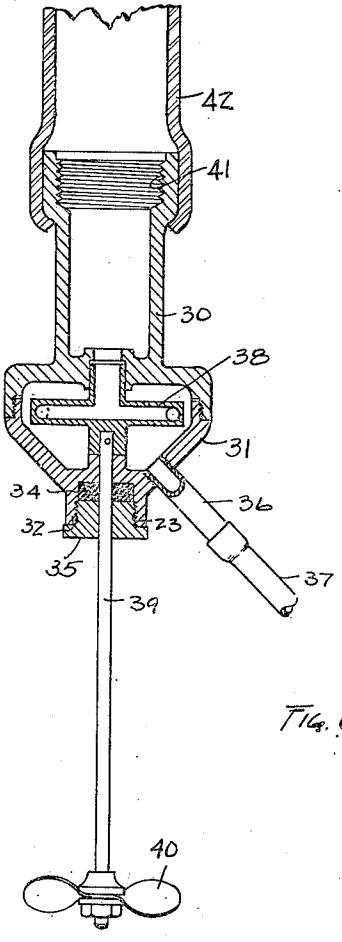

FIG. 8

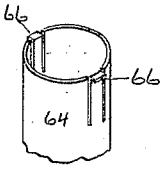

FIG. 10

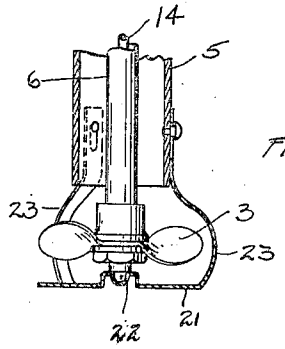

FIG. 7

INVENTORS
Roy O. Young and
BY Charles Robert Jenks
Fay, Oberlin & Fay
ATTORNEYS

UNITED STATES PATENT OFFICE.

CHARLES ROBERT JENKS AND ROY O. YOUNG, OF CLEVELAND, OHIO.

MIXING DEVICE.

1,400,553. Specification of Letters Patent. Patented Dec. 20, 1921.

Application filed July 16, 1921. Serial No. 485,381.

To all whom it may concern:

Be it known that we, CHARLES ROBERT JENKS and ROY O. YOUNG, citizens of the United States, and residents of Cleveland, county of Cuyahoga, State of Ohio, have jointly invented a new and useful Improvement in Mixing Devices, of which the following is a specification, the principle of the invention being herein explained and the best mode in which we have contemplated applying that principle, so as to distinguish it from other inventions.

The present invention relates to a device suitable for attachment to soda fountains or to any water pipe, and arranged to drive a stirring mechanism. In the type adapted for attachment for a soda fountain, the discharge of the fluid drives a suitable stirrer, and at the sime time, allows the fluid to be discharged into the glass or vessel into which the stirrer is being used. In another form, suitable mechanism is shown, whereby the liquid may be discharged at any suitable outside point. To the accomplishment of the foregoing and related ends, said invention, then, consists of the means hereinafter fully described and particularly pointed out in the claims.

The annexed drawings and the following description set forth in detail certain mechanism embodying the invention, such disclosed means constituting, however, but several of the various mechanical forms in which the principle of the invention may be used.

In said annexed drawings:—

Figure 1 is a central section through one form of our improved apparatus; Fig. 2 is an elevational view showing the device attached to a soda fountain and in place in a glass; Fig. 3 is a perspective view of the turbine and propeller stirrer; Figs. 4 and 5 are transverse sections on the lines 4—4 and 5—5, respectively, of Fig. 1; Figs. 6 and 7 are sectional views showing modified forms of construction; and Fig. 8 is a central longitudinal section showing a different form of device. Fig. 9 is a second modified form of device. Fig. 10 is a detail of the form shown in Fig. 9.

The present device consists essentially of a suitable casing 1 in which is mounted a turbine wheel 2 adapted to drive a suitable propeller stirrer 3. As shown in Fig. 1, the housing 1 formed in two sections which have threaded engagement, the upper half of the housing being provided with an interiorly threaded end 4 adapted for engagement with the threads on a faucet, while the lower half of the casing is provided with a downwardly extending tube 5. The upper section will be made in several sizes to fit the different types of faucets or will be attached by means of a suitable adapter. A turbine wheel 2, preferably of the reaction turbine type, is rotatably mounted in the casing, the wheel consisting of a hollow upwardly extending shaft terminating in two horizontally disposed arms which are hollow and which are provided with outlet openings. These openings in the sides of the arms will be of such a size and placed at such distance from the vertical axis of the wheel as to give the desired power and speed for the pressure used. The openings are inclined below the horizontal to allow the streams of liquid to fall below the wheel to prevent choking effect in the small casing. The angular streams also tend to lift the wheel to reduce friction on the bearings.

This wheel 2 is provided as shown in Figs. 1 to 7 with a hollow drive shaft 6 extending down through the tube. Below the end of the tube, this hollow drive shaft is connected to a bushing 7 which carries a stirring propeller, held in place by means of a washer 8 and nut 9, as shown. The bottom of the tube is provided with a guard comprising a central hollow boss 10 that acts as a bearing for the bushing, and the nut 9, which holds the propeller in place, normally rests upon this boss when the device is not operative.

To control the operation of the stirrer and make it substantially automatic, the housing is provided above the turbine 2 with a valve seat 12, on which is normally seated a valve 13 that has a plunger rod or stem 14 extending downwardly through the hollow drive shaft, the bushing 7, and the boss 10 to a point slightly below the bottom of the guard, and this rod is provided at its lower end with a button 15, that is adapted to contact with the bottom of a glass or other receptacle and thus raise the valve, and also the bushing carrying the propeller so as to lift the nut away from the boss on the guard and reduce the friction.

In Fig. 6, a modified construction of the lower end of the device is shown and in this view the guard consists of a bearing 16

having a suitable aperture 17 adapted to receive the valve stem and the bushing for the propeller, and this guard has three upwardly extending arms 18, that are slidably mounted on the tube, there being pins 19 fastened to the tube which extend through slots 20 in the arms, thus allowing the entire guard to be raised to open the valve and operate the device. In Fig. 7 a similar construction to that of Fig. 6, is shown but here the guard 21 is made of a stamped up disk of metal which is cupped up in the center to provide a bearing 22 for the bushing and rod and the arms 23 are formed integrally with the disk, but are attached to the tube in the same manner as are the arms shown in Fig. 6. This type of construction is particularly suitable for use with paper cups as the disk 21 gives a large bearing surface on the bottom of the cup and does not tend to tear or break the same.

In Fig. 9 a modified construction is shown, the device consisting of an upper casing 50 formed of two threaded parts, the lower housing being connected to the usual tube 51. The turbine is mounted in the housing but is provided with a solid shaft 52, which is bored or drilled at its upper end as at 53 to receive the stem 54 of the valve 55 which seats in the usual manner in the valve seat 56 in the upper part of the casing.

The lower end of the tube is counterbored as at 57 and the shaft carries a stirring propeller 58 which is held in place by a nut 59. The guard and automatic operating mechanism consists of a flat plate or disk 60 which is provided with a bearing 61 for the extending shaft end 62. This disk has a series of arms 63 rigidly attached to a short tube 64 adapted to fit within the counter-bored portion 57 of the tube 51 and the short tube is slidable within such counter-bored portion.

The tube is counter-bored a distance sufficient to allow the guard tube to rise enough to obtain a valve lift sufficient to allow the desired flow of liquid through the turbine to operate the same. To prevent accidental removal the tube 51 is provided with two or more slots 65 which receive lugs or bent over ends 66 on the short tube. The short tube or guard may be easily removed by taking off the propeller and then forcing the lugs inwardly.

The stirring propeller 58 has, as shown, two blades which are bent downwardly from the center. This allows the blades to be placed as near the bottom of the glass or receptacle as possible in order to obtain the best stirring action. The shape and angle of the blades throws the liquid against the sides of the glass giving a centrifugal outward and upward action. When the liquid contacts the sides of the receptacle it tends to rebound inward toward the center thus helping to fill in the vortex and allow the liquid to rise evenly in the receptacle.

In each of these forms the housing for the turbine is provided with a series of holes 70 which allows a small amount of the liquid to flow into the glass near the center of the glass controlling the centrifugal or whirling action set up by propeller stirrer and maintaining an even surface on the rising liquid in the receptacle by filling in the vortex. These holes also prevent the formation of a vacuum in the casing by allowing air to pass into the casing and tube and thus rapidly venting the same when the glass or receptacle is removed.

To prevent frothing, the tube from the housing to the glass is made of approximately the same size as the opening in the draft arm and the housing is large enough to allow the carbonated fluid to expand so that the fluid will pass into the glass or receptacle at its normal rate of flow with no more frothing than usual from a draft arm.

Another modified type of stirrer is illustrated in Fig. 8, this form being suitable for attachment to a water line and being arranged so that no liquid is discharged into the material being stirred.

In this form the upper half 30 of the casing is similar to the first form but the lower half 31 of the casing carries a journal bushing 32 and is interiorly threaded at 23 to receive packing 34 and a packing nut 35. The casing is also provided with a discharge pipe 36 which is adapted to be connected to a flexible tube 37 to lead the water back to any suitable drain or the like.

In this form the turbine wheel or rotor 38 is pinned or otherwise secured to a shaft 39 carrying the stirring propeller 40 which is not inclosed. The upper half of the casing will be threaded as at 41 to engage with threads on a faucet or it may be attached to a source of liquid supply by means of flexible tubing 42 as shown. This form is particularly adaptable for kitchen or household use where a stirrer is necessary and where it is to be used at a distance from the faucet and where the liquid must not contact with the material being stirred.

The form for soda fountain attachment gives a very satisfactory inexpensive stirring device and one which can be automatically operated to stir the mixture as the glass is being filled. It is easily installed or removed and has but a few strong working parts. As shown, it can be readily taken apart and cleaned but may be thoroughly cleaned by passing hot water through the device without taking apart.

Other modes of applying the principle of our invention may be employed instead of the one explained, change being made as regards the mechanism herein disclosed, pro-

vided the means stated by any of the following claims or the equivalent of such stated means be employed.

We therefore particularly point out and distinctly claim as our invention:—

1. In a mixing device the combination of a casing, a valve movably mounted therein, a reaction turbine rotatably mounted in said casing, a delivery tube connected to said casing, a drive shaft attached to said turbine, and extending below said tube, a propeller stirrer mounted on said shaft, and automatic valve opening means carried by said shaft and adapted to open said valve to operate said turbine by contact with the bottom of the receptacle to be filled.

2. In a mixing device the combination of a casing, a valve movably mounted therein, a reaction turbine rotatably mounted in said casing, a delivery tube connected to said casing, a drive shaft attached to said turbine and extending below said tube, a propeller stirrer mounted on said shaft, a guard for said stirrer, and automatic valve opening means carried by said shaft and guard and adapted upon contact with the bottom of the receptacle to be filled to open said valve to operate said turbine.

3. In a mixing device the combination of a casing a valve movably mounted therein, a reaction turbine rotatably mounted in said casing, a delivery tube connected to said casing, a drive shaft attached to said turbine and extending below said tube, a propeller stirred mounted on said shaft, a guard movably attached to said tube and providing a bearing for said shaft, and automatic valve actuating means carried by said guard and shaft and adapted upon contact with the bottom of the receptacle to be filled to open said valve to operate said turbine.

4. In a mixing device the combination of a casing a valve movably mounted therein, a reaction turbine rotatably mounted in said casing, a delivery tube connected to said casing, a drive shaft attached to said turbine and extending below said tube, a propeller stirrer mounted on said shaft, a guard slidably mounted in said tube and capable of limited upward movement, and automatic valve actuating means carried by said guard and shaft and adapted to lift said valve upon upward movement of said guard, the latter being actuated by contact with the bottom of the receptacle to be filled.

5. In a mixing device, the combination of a casing, a valve mounted in said casing, a reaction turbine rotatably mounted in said casing, a tube connected to said casing a shaft mounted in said tube and connected to said turbine, a stirring propeller mounted on said shaft below said tube, and a series of downwardly projecting openings in said casing adapted to allow liquid to flow into the center of the receptacle to be filled to eliminate the whirling action of the stirring propeller to allow the liquid to rise evenly in the receptacle.

6. In a mixing device, the combination of a casing, a valve mounted in said casing, a reaction turbine rotatably mounted in said casing, a tube connected to said casing a shaft mounted in said tube and connected to said turbine, a stirring propeller mounted on said shaft below said tube, and a series of downwardly projecting openings in said casing adapted to allow liquid to flow into the center of the receptacle to be filled to eliminate the whirling motion of the stirring propeller to allow the liquid to rise evenly in the receptacle, said openings being also adapted to vent the casing and tube to the atmosphere to allow the liquid to flow completely from the casing and tube during removal of the receptacle being filled.

7. In a device of the character described, the combination of a housing comprising upper and lower sections adapted to be removably connected, said upper housing having an open end adapted to be connected to a source of liquid supply, a turbine wheel mounted in said housing and adapted to receive the liquid, a hollow tube connected to the lower section, a hollow drive shaft rotatably mounted in said tube and connected to said turbine, a stirring propeller mounted on said shaft, a valve mounted in said upper housing section and having a stem extending downwardly through said shaft and propeller, and extending therebelow and adapted to contact the vessel to be filled to open said valve.

8. In a device of the character described, the combination of a housing comprising upper and lower sections adapted to be removably connected, said upper housing having an open end adapted to be connected to a source of liquid supply, a turbine wheel mounted in said housing and adapted to receive the liquid, a hollow tube connected to the lower section, a hollow drive shaft rotatably mounted in said tube and connected to said turbine, a guard slidably attached to said tube and comprising a bearing for said shaft, a valve mounted in said upper casing, a valve rod attached to said valve and extending downwardly through said shaft and terminating on said guard, movement of said guard upon striking the bottom of the vessel to be filled being adapted to raise said rod and valve to operate said device.

Signed by us this 14th day of July, 1921.

CHARLES ROBERT JENKS.
ROY O. YOUNG.