E. HUDSON.

END GATE FOR DUMPING VEHICLES.

APPLICATION FILED MAR. 17, 1915.

1,245,591. Patented Nov. 6, 1917.

Fig. 1.

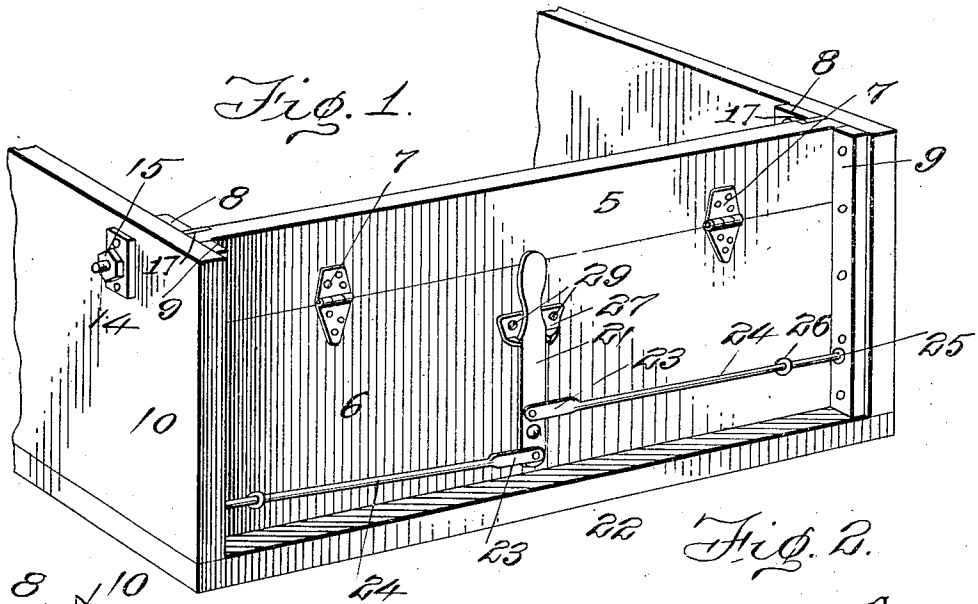

Fig. 2.

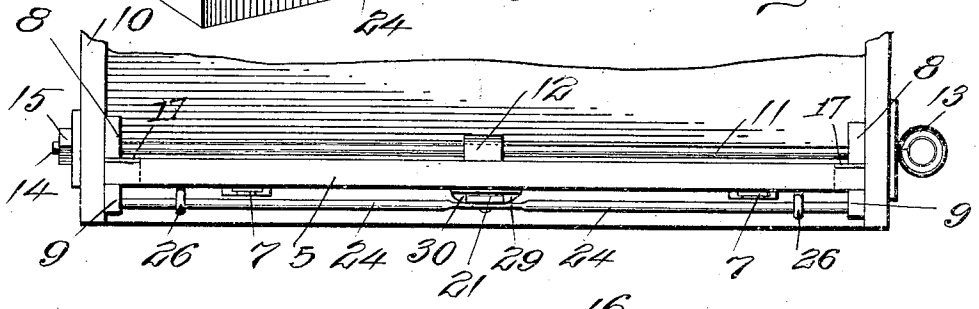

Fig. 3.

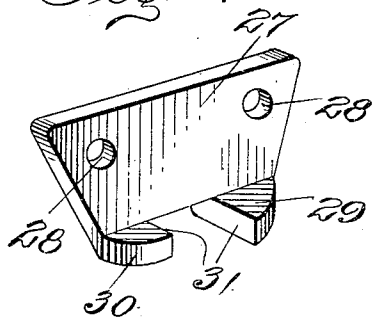

Fig. 4.

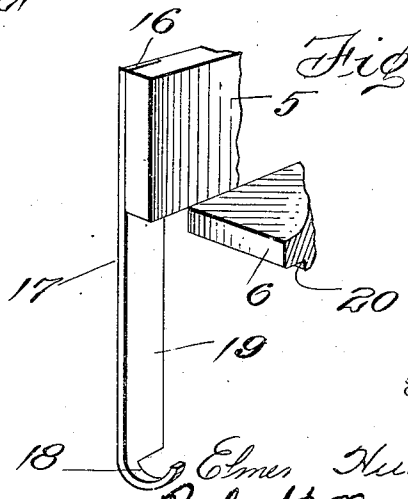

Witnesses

Robert Sidwell

C. V. Newfold

Inventor

Elmer Hudson,

By Richard B. Owen,

Attorney

UNITED STATES PATENT OFFICE.

ELMER HUDSON, OF GOLDEN, ILLINOIS, ASSIGNOR OF ONE-HALF TO J. J. EMMINGA AND F. E. SAHLAND, BOTH OF GOLDEN, ILLINOIS.

END-GATE FOR DUMPING-VEHICLES.

1,245,591. Specification of Letters Patent. Patented Nov. 6, 1917.

Application filed March 17, 1915. Serial No. 14,973.

To all whom it may concern:

Be it known that I, ELMER HUDSON, a citizen of the United States, residing at Golden, in the county of Adams and State of Illinois, have invented certain new and useful Improvements in End-Gates for Dumping-Vehicles, of which the following is a specification.

This invention relates to end gates for wagons and the like vehicles, and more particularly relates to an end gate formed of hinged sections, the upper of which remains stationary while the lower is movable to dump the contents of the said vehicle.

As a principal object this invention contemplates the provision of an end gate of the type set forth with which there shall be incorporated novel means for supporting the upper section, for locking the upper section, together with lever means carried by the lower section and adapted to lock simultaneously at two points of contact with the vehicle box, such section from outward movement.

It is a still further object to provide an end gate the upper section of which may be removably locked with respect to the wagon box and also supported when the locking means is withdrawn, such support means serving as a stop to limit movement in one direction of the hingedly connected lower section of the end gate.

The above and additional objects which will become apparent as this explanatory description proceeds, are accomplished by such means as are illustrated in the accompanying drawings, described in the following specification and then more particularly pointed out in the claims which are appended hereto and form a part of this application.

With reference to the drawings, wherein there is illustrated the preferred embodiment of this invention, as it is reduced to practice, and throughout the several views of which like characters of reference designate similar parts:

Figure 1 is a perspective view of a portion of a vehicle body showing the end gate of this invention attached thereto,

Fig. 2 is a plan view of the subject-matter of Fig. 1,

Fig. 3 is a perspective detail of the latch adapted to coact with the locking lever of the movable section, and

Fig. 4 is a fragmentary perspective view illustrating the support means for the upper section of the gate.

The end gate of this invention includes broadly an upper and a lower gate section respectively denoted by the numerals 5 and 6 and hingedly connected in any suitable manner indicated at 7. The gate as a whole is slidable between spaced cleats or standards 8 and 9 alined transversely of the wagon body 10 to slidably receive the end gate therebetween. The upper section 5 is much the smaller of the two in width and is adapted to be locked in its assembled position with relation to the wagon body 10 by means of a bar or rod 11 which extends through the cleats 8 and the sides of the wagon box as well as through a suitable bracket 12 carried centrally of the uppermost section. This rod 11 is formed upon one extremity with a suitable eye 13 for facilitating its positioning and withdrawal while the opposite extremity is threaded as at 14 to receive a nut 15 whereby the bar may be locked to fixedly maintain the upper gate section with respect to the wagon body regardless of the movement of the lower section. Each extremity of this upper section is provided with a vertical mortise 16 in which there is seated flush with the end of this section a supporting bar or strap 17, the lower extremity of which is formed with a curved foot 18 which is adapted to contact with the floor of the vehicle and to fit snugly between the spaced cleats 8 and 9 on each side of the body of the vehicle. This bar or plate 17 is laterally elongated in order that the edge 19 thereof may serve as a stop to limit inward movement of the movable section 6 which is cut away as indicated at 20 to overlie this edge 19, it being understood that the upper section 5 only projects between the cleats 8 and 9, that the lower section is movable between the cleats 9 and that the edge 19 just mentioned projects beyond these cleats to contact with the side edges of the lower section 6. The curved feet 18 of these straps 17 operate to prevent the straps from cutting into the bottom of the wagon body or bed.

It now remains but to describe the particular means for locking the lower section against movement about its hinges 7, such locking means being engageable with the wagon body simultaneously at two opposite

points. The locking lever 21 is pivoted as indicated at 22 centrally of the lower portion of the section 6 and upon opposite sides of this pivotal point is connected with the flattened ends 23 of similar links 24 which extend into sockets 25 provided at suitable points in each cleat 9 through guides 26 which maintain these links in a plane parallel to the plane of the gate section 6. A latch plate illustrated in detail in Fig. 3 is adapted to coact with the lever 21 in maintaining the same in either of the two positions necessarily locking or releasing the hinged section. This plate includes a body portion 27 which is apertured and indicated at 28 for the reception of securing means 29 whereby the plate may be fastened centrally of the gate section 6 in vertical alinement with the lever pivot 22. The lower edge of this body portion is formed with a pair of oppositely rounded flanges 29 and 30, both of said flanges having facing and spaced straight edges 31 and the latter of said flanges being comparatively smaller in order to permit the passage of the lever 21 thereby, such lever being received in its locked position between the facing edges 31.

It will readily be seen that the upper section of the end gate may be assembled in fixed relation to the vehicle body by means of the removable rod or bolt 11 which in turn can be secured to prevent any removal whatever of this gate section which is also supported by the bars 17 during the positioning or removal of the rod 11. The lower gate section may be readily swung upward upon its hinges when it is desired to dump the contents of the wagon body 10 or may be locked by moving the lever 21 over the locking flange 30 and between the facing edges 31 in which position the lever will be securely maintained until bent outwardly from the vertical to pass from right to left (Fig. 1) in releasing the hinged section 6. It will also be seen that both of the links 24 are adapted to enter their locking sockets 25 simultaneously upon movement of the lever 21 into the position illustrated.

While in the foregoing however, there has thus been illustrated in the drawings and described in the specification, such combination and arrangement of elements as constitute the preferred embodiment of this invention, it is desired to emphasize the fact that such minor changes in the matters of proportion and degree may be made in later adaptations of this device as shall not alter the spirit of the invention as defined in the appended claim.

What is claimed is:

The combination with a wagon body having on the inner face of each side member a pair of longitudinally spaced vertically disposed cleats; of an end gate comprising an upper section of a length to slide vertically between said cleats and be held against lateral movement thereby, means for removably securing said section in adjusted position, said upper section having mortises on the inner face of its opposite ends, metal strips seated in said mortises flush with the ends of the section, said strips being wider than the thickness of the cleats between which they are disposed to provide stops and having curved feet at their lower extremities adapted to contact with the bottom of the wagon body and to fit snugly between said cleats and be housed between them, said feet operating to prevent puncturing of the bottom of the wagon body, a lower gate section hinged to the lower edge of the upper gate section and of a length to permit it to swing outwardly between the outer cleats and to engage said strips when swung into perpendicular position, and means on the lower gate section for locking it in closed position.

In testimony whereof I affix my signature in presence of two witnesses.

ELMER HUDSON.

Witnesses:
C. E. BEER,
E. H. DETMER.

Copies of this patent may be obtained for five cents each, by addressing the "Commissioner of Patents, Washington, D. C."