Oct. 3, 1967 C. J. PAULER ET AL 3,344,455

BRUSH ATTACHMENT STRUCTURE

Filed Oct. 24, 1965 2 Sheets-Sheet 1

Fig. 1

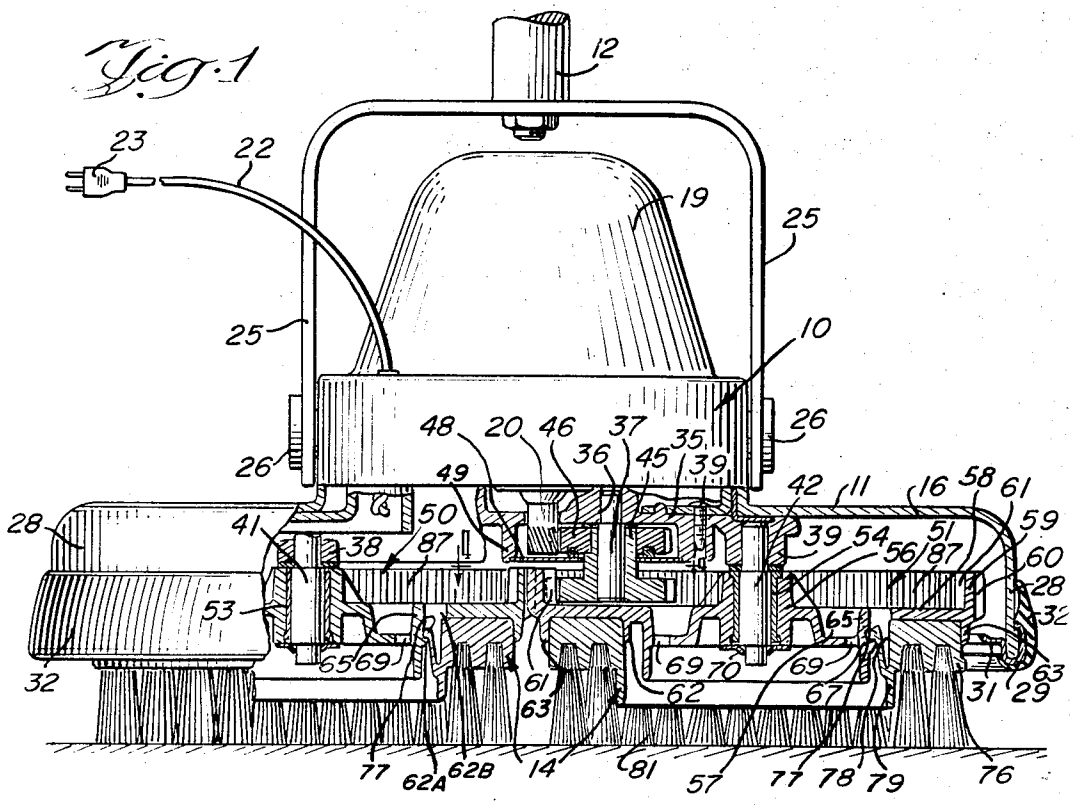

Fig. 2

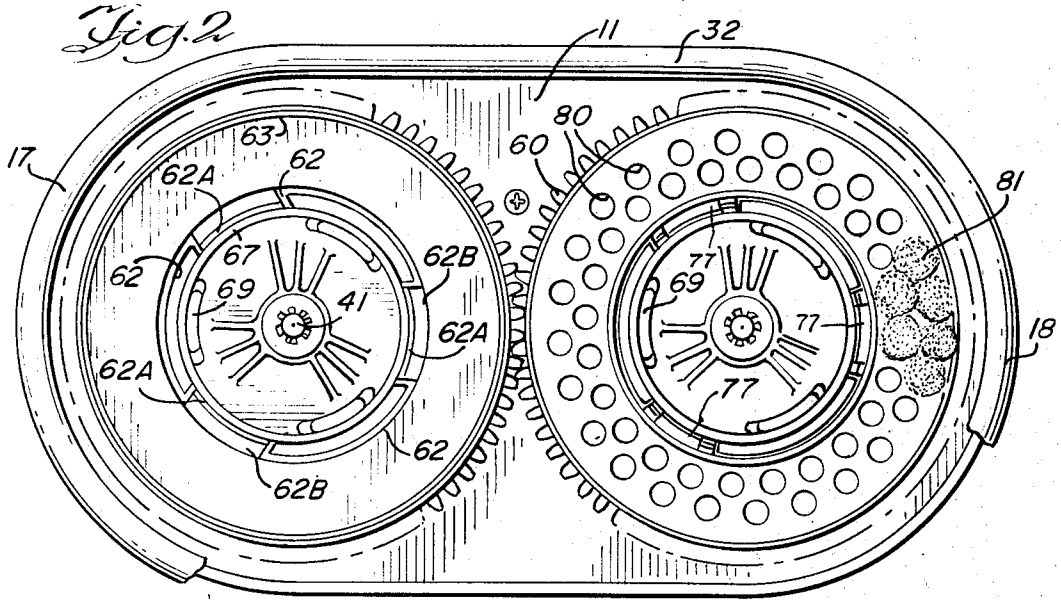

INVENTORS
Charles J. Pauler
George A. Westergren
Erwin E. Nordeen

BY Hofgren, Wegner, Allen, Stellman & McCord
ATTORNEYS

Oct. 3, 1967 C. J. PAULER ET AL 3,344,455

BRUSH ATTACHMENT STRUCTURE

Filed Oct. 24, 1965 2 Sheets-Sheet 2

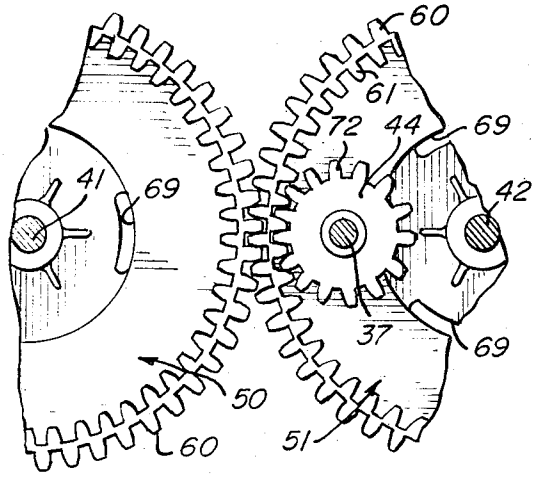

Fig. 4

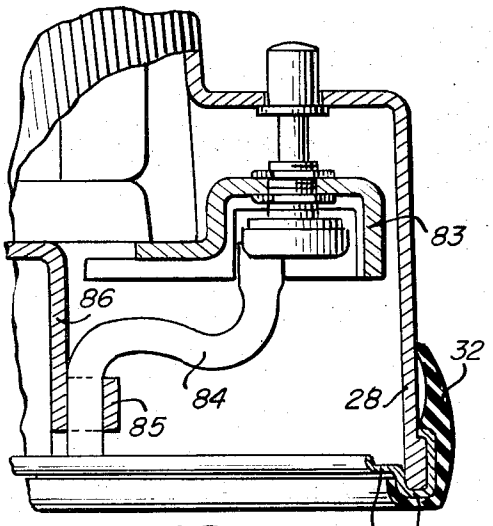

Fig. 6

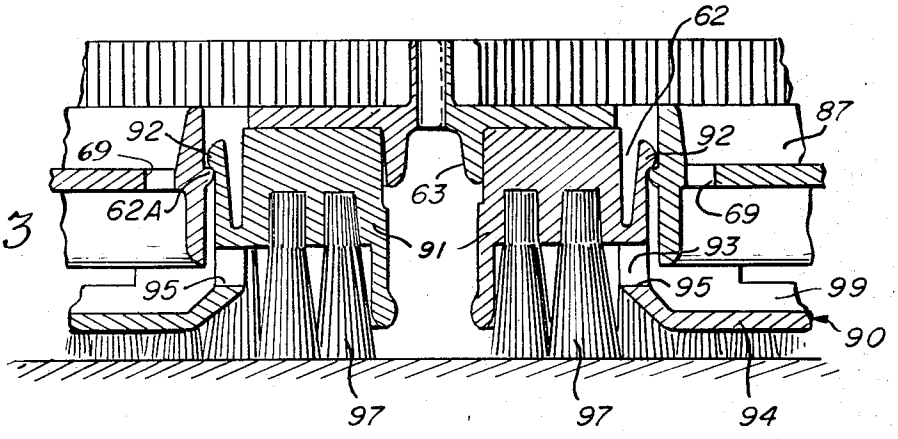

Fig. 3

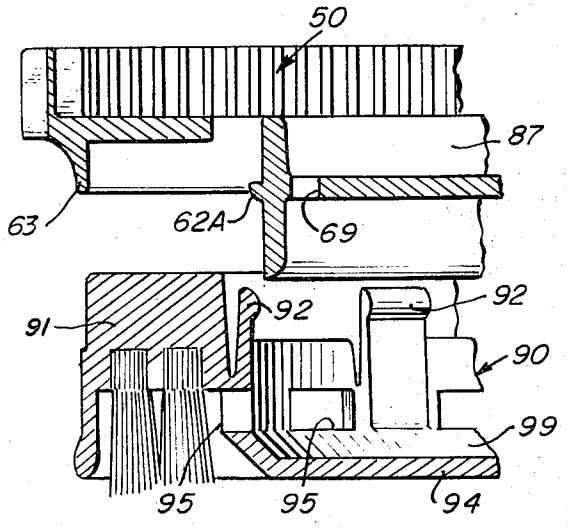

Fig. 5

United States Patent Office 3,344,455 Patented Oct. 3, 1967

3,344,455

BRUSH ATTACHMENT STRUCTURE

Charles J. Pauler, George A. Westergren, and Erwin E. Nordeen, all of St. Paul, Minn., assignors to Whirlpool Corporation, a corporation of Delaware

Filed Oct. 24, 1965, Ser. No. 504,546
5 Claims. (Cl. 15—50)

This invention relates to floor and rug cleaning and polishing apparatus and more particularly to attachments for rotary scrubbing and polishing apparatus including novel means for supplying fluids to the scrubbing or polishing attachments of the apparatus.

In floor and rug polishing and scrubbing assemblies it is desirable to provide means for readily and easily removing and replacing the scrubbing and/or polishing brushes from the apparatus without the use of special tools and without the need for actuating latches, catches or the like. Assemblies on the market today require the use of screwdrivers or pliers, or in some instances require the operator to depress tabs or unfasten catches to loosen the brush attachments for removal. Many of the present assemblies also have the problem that the brushes do not stay locked to the driving mechanism with the result that a brush or brushes may suddenly loosen and go spinning across the room. A further disadvantage of presently known assemblies lies in the means thereof for dispensing fluid, either detergent solution or wax, to the surface being treated. In most instances the fluid is either pumped or dispensed directly onto the surface to be treated or is deposited directly into the brush attachment in a stream from the storage container and is fed from the attachment to the surface being treated or to the brush.

The present invention comprehends an improved cleaning and polishing apparatus eliminating the above discussed disadvantages of the known cleaning and polishing apparatus. Thus, a principal feature of the present invention is the provision of a new and improved cleaning and polishing apparatus.

Another feature of the invention is the provision of such cleaning and polishing apparatus arranged for improved connection and disconnection of the cleaning and polishing brush attachments to and from said apparatus.

A further feature of the invention is the provision of such an apparatus having new and improved means for selectively attaching and removing brush attachments without the use of separate tools or without actuation of a separate latching device.

Still another feature of the invention is the provision of such apparatus having resiliently biased holding means for said brush attachment to said apparatus.

A yet further feature of the invention is the provision of such apparatus wherein the fluid for cleaning and/or polishing is dispensed into the rotating geared brush housing means which serves as a form of reservoir for the fluid.

Still another feature of the invention is the provision of such apparatus having new and improved means for dispensing fluid from the reservoir in the geared brush housing means into centrifugal contact with the inner portion of the brush attachment means.

Yet another feature of the invention is the provision of such apparatus wherein the shampoo brush attachment has a cup for receiving fluid and from which the fluid is dispensed radially outwardly into the brush of the attachment.

A still further feature of the invention is the provision of such apparatus having separable brush attachment means and geared brush housing means with coordinated fluid dispensing means therebetween.

Other features and advantages of the invention will be apparent from the following description taken in connection with the accompanying drawings wherein:

FIGURE 1 is a front elevational view of the operative parts of our invention with portions of the housing broken away and parts shown in cross section;

FIGURE 2 is a bottom view thereof, with certain parts removed to facilitate illustration thereof;

FIGURE 3 is an enlarged fragmentary cross sectional view similar to the central area of FIGURE 1, but with a shampoo brush in position on the apparatus in place of the scrubbing or polishing brush of FIGURE 1;

FIGURE 4 is a cross section taken substantially along the line 4—4 of FIGURE 1;

FIGURE 5 is an exploded view of a section of the operative parts of the shampoo brush attachment of FIGURE 3; and

FIGURE 6 is a partial cross section of a dispensing arrangement for feeding fluids or solutions to the gear cups in the housing.

In the exemplary embodiment of the invention as disclosed in the drawing, and in particular in FIGURE 1–3, there is illustrated a scrubbing and polishing apparatus or assembly indicated generally by the reference numeral **10**, which apparatus has a housing **11**, a bail type handle **12** and scrubbing or polishing brush attachments **14**.

The housing **11** has a hollow, elongate body portion **16** having two rounded sides **17**, **18** and a raised portion **19** substantially centrally positioned relative to the edges of the body. The portion **19** houses an electric motor (not shown) having a vertically disposed output or drive shaft **20** extending downwardly from said motor into the hollow part of the body portion **16**. An electric cord **22** extends from the motor through the portion **19** and has a plug **23** adapted to be plugged into an electric outlet (not shown). The handle **12** has a pair of arms **25** pivotally mounted at the distal ends by means of the pins **26** extending into the opposite sides of the raised portion **19** of the housing.

The body portion **16** has a downturned side flange **28** with a shaped metal bumper **29** fastened on the raw edges thereof. The bumper **29** has an inwardly directed ledge **31** extending around the inside of the flange **28** and has a rubber snubber or protector **32** bonded to the outside thereof. The snubber **32** not only provides a guard for preventing damage to furniture or walls contacted by the scrubbing assembly, but also provides a decorative covering which lends the assembly a modern appearance.

Within the body portion **16** of the housing **11** is a mounting plate **35** which has an aperture **36** for receiving a stub shaft **37** and has a pair of downwardly disposed apertured lugs **38**, **39** for receiving the stub shafts **41**, **42** respectively. The stub shaft **37** is adapted to rotatably receive a gear **44** having an integrally formed sleeve **45** to which is keyed a gear **46** such that the two gears **44** and **46** rotate together about the axis of the stub shaft **37** with the teeth on the gear **46** meshing with the teeth on the bottom portion of the drive shaft **20**. A sealing plate **48** is fastened to the projections **49** formed on the plate **35** and encircle the sleeve **45** so as to seal the motor and environs from the moisture and chemicals being used with the assembly as will be described hereinafter.

A pair of geared brush housings **50**, **51** have bearing sleeves **53**, **54** embedded therein for rotatably engaging the stub shafts **41**, **42**, respectively. The housings **50**, **51** are substantially identical in construction and mounting so that only housing **51** will be described in detail. The housing **51** has a hub **56** encircling said bearing sleeve **54** and has a continuous cup-shaped well **57** joined thereto. The outer lip of the well **57** is joined with a ring-shaped flat portion **58** connected to a vertical flange **59** having external gear teeth **60** radially disposed about the outer surface of said flange. Said flange **59** has another set of gear teeth **61** formed on the inner surface of said flange so as to form an internal and external geared brush housing.

The flat portion 58 of said geared housing 51 has a pair of downwardly projecting concentrically disposed spaced apart tongues, ledges or sleeves 62, 63, encircling an outer wall 65 of the cup-shaped well 57. The wall 65 has an extension 67 extending downward therefrom in an axial direction, which extension 67 is concentric with respect to the axis of the geared housing and with respect to the sleeves 62, 63. A plurality of arcuately shaped openings 69 extend through the bottom of the cup-shaped well 57 and are positioned relatively close to the wall 65 and extension 67 of said housing.

The geared brush housing 51 is rotatably carried by the stub shaft 42 and is held onto said shaft by suitable means such as a spring lock nut 70. With the geared housing 51 positioned on the shaft 42, the gear teeth 72 (FIGURE 4) of the gear 44 mesh with the internal gear teeth 61 of the geared housing and the external gear teeth 60 mesh with corresponding external gear teeth on the geared housing 50 such that operation of the motor will drive the gear 44 which in turn will rotate the geared housings 50, 51 in oppositely rotating directions.

The pair of scrubbing brushes 14 of FIGURE 1 are substantially identical in structure and are adapted to be mounted, one to geared housing 50, and the other to geared housing 51. Each scrubbing brush 14 has a ring-shaped base 76 which has, in the illustrated form, three clips or tabs 77 projecting upwardly and outwardly from the inner cylindrical surface 78 of said base 76 with the outer ends of the clips resiliently urged away from the inner face of said surface 78. The base 76 of the brush 14 has a downwardly projecting sleeve 79 which is an extension of the surface 78. The radial width of said ring-shaped base 76 is such as to permit a snug fit between the tongues or ledges 62, 63 of the geared brush housing 50, 51, with the clips or tabs 77 snapped in behind shoulder 62A to hold the brush 14 on the geared housing. The base 76 has a plurality of openings 80 into each one of which is securely fastened in a staggered pattern a bundle or bunch of bristles 81. With all of the openings 80 filled with bristles, a brush is formed having a concentric ring of bristles with ends positioned for engagement with a surface to be cleaned or polished. Staggering the bristles in the brush tends to aerate the detergent solution to create suds or foam for cleaning of floors and rugs. The bristles extend a short distance below the end of the sleeve 79, which sleeve serves somewhat as a support for the bristles of the brush. The brushes 14 are easily locked to the geared housings 50, 51 by engagement of the clips or tabs 77 with shoulders 62A and can be readily removed by disengaging the clips 77 from said shoulders 62A.

FIGURE 2 shows the left-hand brush 14 removed so that the bottom of the geared housing can be viewed. The three openings 69 are concentric with respect to the shaft 41, as are the tongues or sleeves 62, 63. The extension 67 of the wall 65 is positioned between the openings 69 and the sleeve 62. Openings 62B in tongue 62 allow tabs 77 to cooperate with shoulder 62A for support of brushes 14 on brush housings 50 and 51.

A dispenser container (not shown) is carried by the handle 12 of the assembly and feeds detergent or other fluid to the dispenser control mechanism 83 (FIGURE 6). A pair of tubes 84 (only one is shown in FIGURE 6) leads from the control 83 to a clip 85 carried by a guard 86 for directing the fluid into the reservoir 87 in each geared housing 50 and 51. In this way, fluid such as detergent, wax or the like is fed in predetermined amounts into the reservoirs 87 of the housings. The fluid first flows into the cup-shaped well 57 from which it flows through openings 69 into the inner portion of the brushes 14. With the geared housings 50, 51 and attached brushes 14 rotating about the axes of the shafts 41, 42, the fluid flows by centrifugal force through the openings 69 down the inner surface of the wall 67 and into the bristles of brushes such as 14 and 81. Some of the fluid will be directed outwardly from the bottom edge of the extension 67 of the wall 65 against the sleeve 79 and bristles 81 so as to wet the brushes and provide fluid and suds at the working surface directly from the bristles of the brush.

FIGURES 3 and 5 show the shampoo attachment for our assembly. That is, the scrubber or polishing brushes 14 are removed and a shampoo attachment or brush 90 is attached. The shampoo brush 90 has a base 91 similar to base 76 of the brush 14 and includes the same type of resilient clips or tabs 92 for attaching the brush 90 to the geared housings 50, 51. The inside sleeve 93 of the brush 90 inclines inwardly and is connected to a flat bottom wall or plate 94 extending across the open portion within the ring of the brush. A plurality of radially directed slots 95 project outward through said sleeve 93 directly into the bristles 97 of the brush 90. The bristles are attached to the base 91 in a manner substantially the same as with brush 14. With the clips or tabs 92 gripping the shoulder 62A, the shampoo brushes 90 are attached to the geared housings 50, 51 ready for use. The wall or plate 94 is spaced a short distance up from the ends of the bristles 97 of the brush 90. The wall or plate 94 contacts the rug or surface and serves to support the assembly without crushing the bristles of the shampoo brush. Generally the shampoo brush 90 will have bristles softer and less stiff than the scrub or polish brush 14, so that the support created by the wall 94 is somewhat necessary. Also, the shampoo brush works better and more efficiently if the weight of the machine is borne by the wall 94 so that the shampoo brush can better run through the nap of a rug and clean and shampoo the soiled surfaces.

With the shampoo brushes 90 in place on the assembly and with the motor running, fluid flows from the reservoirs 87 in the brush housings through openings 69 into the cup 99 of the shampoo brush. Due to the centrifugal force of the turning brushes 90, the fluid is agitated and urged outward through the openings or slots 95 into the bristles 97 of the brush 90. The agitated fluid soaks the bristles as it moves down the bristles to be whipped into a sudsy froth by the whipping and aerating action between the bristles of the brush and the nap of the rug. Only liquid-free, sudsy foam is applied to the rug. The cleaning action is fast and efficient as a result of the rapid application of fluid to the point of greatest need.

While we have shown and described certain embodiments of our invention, it is to be understood that it is capable of many modifications. Changes, therefore, in the construction and arrangement may be made without departing from the spirit and scope of the invention as disclosed in the appended claims.

The embodiments of the invention in which an exclusive property or privilege is claimed are defined as follows:

1. A cleaning and polishing machine having fluid storage means, comprising: a housing; a handle pivotally mounted on said housing; power means carried by said housing; a pair of combination gear and brush support means carried by said housing and meshing with each other at a point along the peripheries thereof, said power means driving one of said meshed gear and brush support means, each said combination gear and brush support means having a chamber for receiving fluid from said storage means; a brush member resiliently attached to each of said gear and brush support means; and means for dispensing fluid from said chamber in said gear and brush support means to said brush members.

2. A cleaning machine comprising: a housing; a motor carried by said housing and having an output shaft; a first geared brush support member operatively associated with said motor for receiving rotatable movement from said output shaft; a second geared brush support member carried by said housing and rotatably driven by said first geared brush support member; means defining a fluid chamber in each of said support members and each of said support members having openings for dispensing fluid therefrom; means for supplying fluid to said cham-

bers; a brush member for each support member; and means for attaching said brush members to said support members including resilient tab means carried by said brush members, and coacting means carried by said support members for operatively receiving said tab means in fastening relation therewith whereby fluid dispensed through said openings of said chamber means of the support members flows by centrifugal action to the brush members for use in cleaning or polishing a floor.

3. A floor scrubbing and polishing assembly comprising: a housing having an open bottom portion defined by vertical wall portions; a motor carried by said housing and having an output shaft projecting into said open bottom portion; at least one support member carried by said housing within said bottom portion and being rotatably driven by said motor; means defining a fluid receiving chamber in said support member, said support member having openings for dispensing fluid therefrom; means for supplying fluid to said chamber; a brush attachment; and means for fastening said brush attachment to said support member including resilient tab means carried by said brush attachment, and coacting means carried by said support member for operatively receiving said tab means in gripping relation therewith, whereby fluid dispensed through said openings of said chamber means flows by centrifugal action to said attachment member for use in cleaning or polishing a floor.

4. A cleaning and polishing machine, comprising: a housing; a motor carried by said housing; a combination gear and brush support member carried by said housing and being rotatably driven by said motor, said support member lying in a plane substantially parallel to the plane of the housing; a brush member; spaced resilient tab means on one of said members having engaging means engaging shoulder means on the other of said members for removably securing said brush member to said support member; means for receiving fluid in a chamber in said gear and support member; and means for dispensing fluid from said chamber in said gear and support member to said brush member whereby fluid is dispensed into the brush members for use in cleaning or polishing a surface.

5. A cleaning and polishing apparatus comprising: a housing having an upwardly projecting pivotally mounted handle and an open bottom portion defined by vertical wall portions; a motor carried by said housing and having an output shaft projecting downwardly therefrom; a combination gear and brush support member operatively associated with said motor for receiving rotatable movement from said output shaft; means defining a fluid supply chamber in said combination gear and support member, said chamber having openings therein for dispensing fluid therefrom; means for supplying fluid to said chamber; an attachment member for said apparatus; and resilient tab means on one of said members having engaging means engaging shoulder means on the other of said members for removably securing said attachment member or said support member, whereby fluid dispensed through said openings in said chamber of the combined gear and support member flows by centrifugal action to the attachment for use in scrubbing or polishing a surface.

References Cited

UNITED STATES PATENTS

1,829,132	10/1931	Finnell	15—50
1,933,846	11/1933	Finnell	15—49 X
1,979,797	11/1934	Finnell	15—50
2,039,356	5/1936	Smalley	15—29 X
2,103,311	12/1937	Atkin	15—180
2,733,465	2/1956	Holt	15—49
3,102,292	9/1963	Jepson et al.	15—50
3,216,035	11/1965	Gaudry	15—49
3,216,047	11/1965	Ernolf	15—49 X

FOREIGN PATENTS

517,926	3/1955	Italy.
618,223	2/1961	Italy.

CHARLES A. WILLMUTH, *Primary Examiner.*

E. L. ROBERTS, *Assistant Examiner.*