Sept. 10, 1946. F. KELHOFFER 2,407,283

MECHANO-THERAPEUTIC EQUIPMENT

Filed July 12, 1944 3 Sheets-Sheet 1

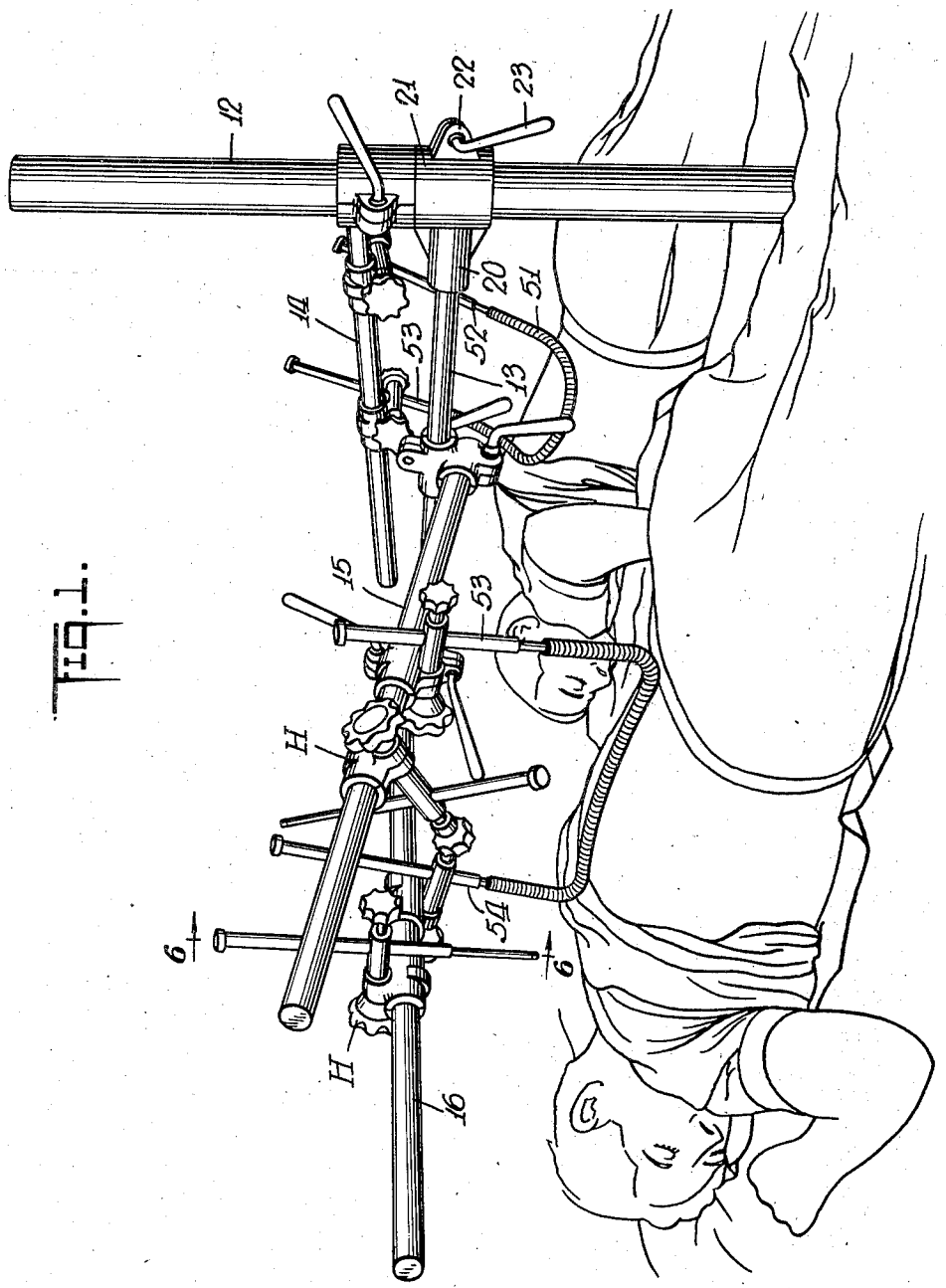

Fig. 1.

INVENTOR
Florence Kelhoffer
BY
Dean Fairbank & Hirsch
ATTORNEYS

Sept. 10, 1946. F. KELHOFFER 2,407,283

MECHANO-THERAPEUTIC EQUIPMENT

Filed July 12, 1944 3 Sheets-Sheet 2

Fig. 2.

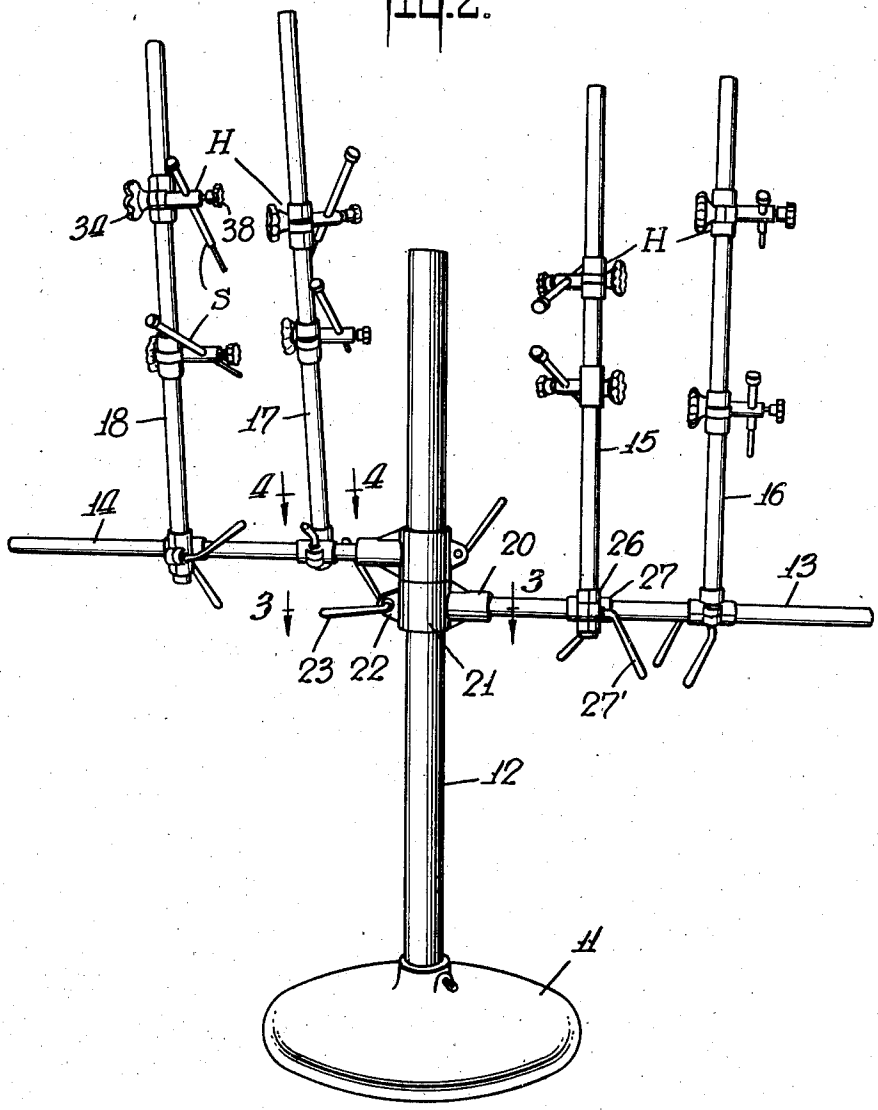

Fig. 3.

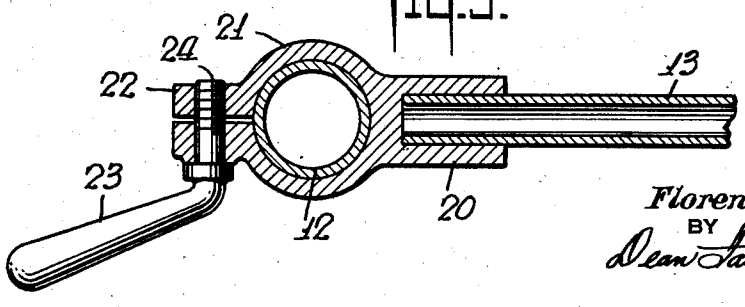

INVENTOR
Florence Kelhoffer
BY
Dean Fairbank & Hirsch
ATTORNEYS

Sept. 10, 1946. F. KELHOFFER 2,407,283

MECHANO-THERAPEUTIC EQUIPMENT

Filed July 12, 1944 3 Sheets-Sheet 3

FIG. 4.

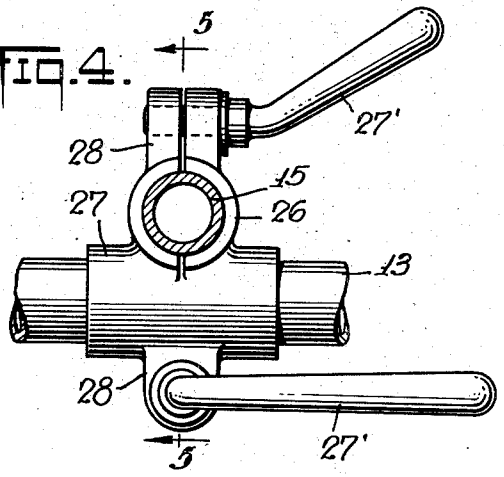

FIG. 5.

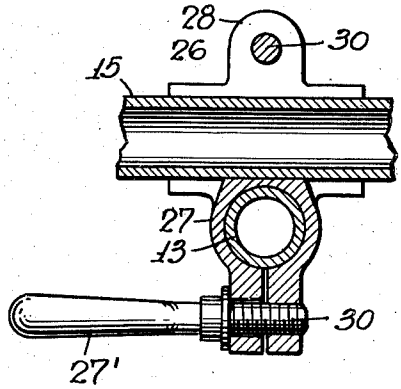

FIG. 6.

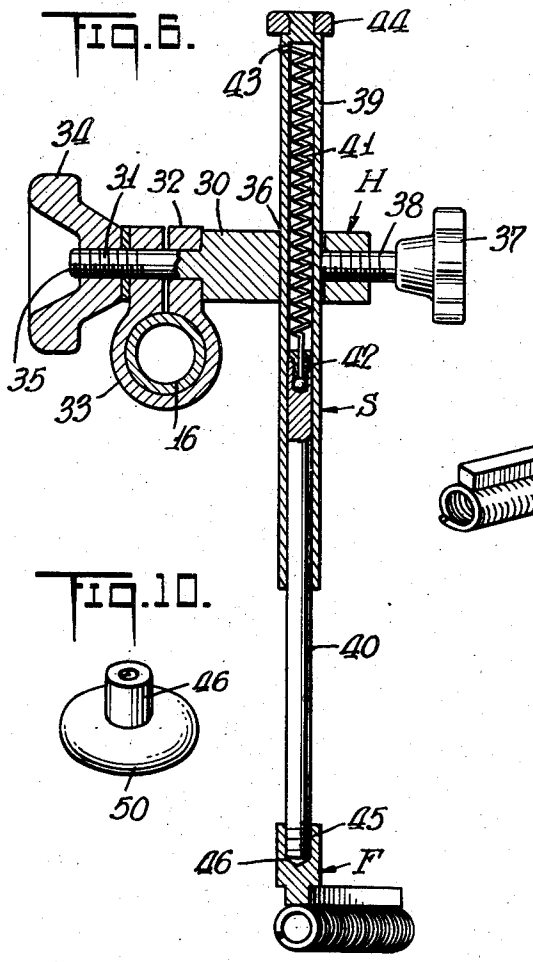

FIG. 8.

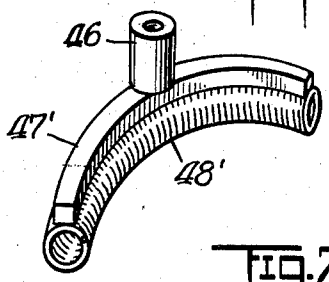

FIG. 7.

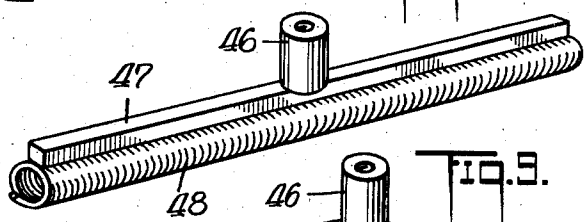

FIG. 9.

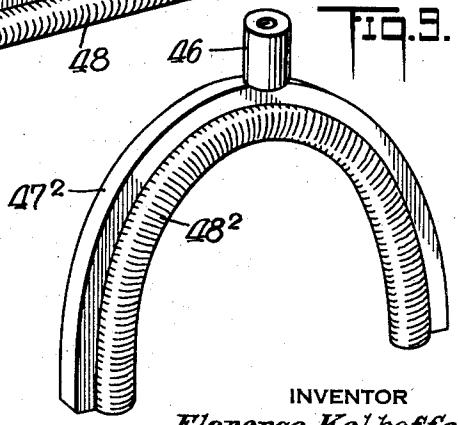

FIG. 10.

INVENTOR
Florence Kelhoffer
BY
Dean Fairbank & Hirsch
ATTORNEYS

Patented Sept. 10, 1946 2,407,283

UNITED STATES PATENT OFFICE

2,407,283

MECHANOTHERAPEUTIC EQUIPMENT

Florence Kelhoffer, Brooklyn, N. Y.

Application July 12, 1944, Serial No. 544,539

7 Claims. (Cl. 128—24)

1

The present invention relates to mechanotherapeutic equipment, more particularly of the type to stimulate nerves and circulation.

The present applicant has found that decidedly beneficial effects are obtained upon the human body by the exertion of sustained, uninterrupted, constant localized mechanical pressure for a period in the order of one half hour against fatigued, muscle bound, congested or otherwise affected localities. Such pressure may be applied upon the thigh, the shoulders, the buttocks or any part of the body and is effective also when applied at the spine to effect adjustments in the nerve control of various organs.

It is among the objects of the invention to provide a simple and inexpensive apparatus, that the operator may readily adjust to apply the desired pressure to any one or more regions of the patient and in a useful application to afford facilities for treating two or more patients simultaneously.

In the accompanying drawings in which are shown one or more of various possible embodiments of the several features of the invention

Fig. 1 is a perspective view showing the equipment in use for two patients,

Fig. 2 is a perspective view showing the equipment out of use and with the body presser heads removed from the carrying rods,

Fig. 3 is a view in longitudinal cross-section taken on line 3—3 of Fig. 2, and on a larger scale,

Fig. 4 is a view in transverse cross-section taken on line 4—4 of Fig. 2,

Fig. 5 is a view in longitudinal cross-section taken on line 5—5 of Fig. 4,

Fig. 6 is a view in longitudinal cross-section taken on line 6—6 of Fig. 1 and on a larger scale, showing one embodiment of presser head installed thereon, and

Figs. 7, 8, 9 and 10 are perspective views of various specialized embodiments of presser heads.

Referring now to the drawings, the device includes a pedestal or base 11 from which rises a standard or post 12, upon which are mounted one or more, desirably two, transverse horizontal carrier bars 13 and 14, each of which in turn mounts one or more, desirably two, cross arms 15 and 16 and 17 and 18 respectively. The cross arms in turn mount the holders H for the body presser shanks S.

The device is desirably universally adjustable to permit ready displacement of the various body presser shanks to dispose the body engaging presser heads thereof at any distance within the limits of the apparatus from the standard, at any

2

level above the base and in any angular relation, all for ready accommodation to any part or parts of the body of a patient of any size.

To this end, one end of each carrier arm 13 and 14 is desirably mounted in a corresponding socket 20 rigid and desirably integral with a clamp sleeve 21. The clamp sleeve preferably encircles the standard and has a pair of ears 22 unitary therewith into which extends the threaded end 24 of a clamp lever 23 for tightening the clamp about the standard at any selected height and in any position of peripheral adjustment about the standard.

Each cross arm 15, 16, 17, 18 is mounted in a corresponding clamp sleeve 26 thereabout, at right angles to clamp sleeve 27 which is integral therewith and embraces the carrier arm 13. Each sleeve is clamped about the corresponding arm by a clamp lever 27 carried by the corresponding pair of ears 28 on the respective clamp sleeves. Thus, each cross bar may be positioned and locked anywhere lengthwise of the corresponding carrier arm, and to extend along any radius at right angles to such arm.

Each cross arm carries one or more presser shank holders H adjustable along the length of the cross arm. To this end a holder block 30 has a shank 31 extending through corresponding apertures through the jaws 32 of a clamp sleeve 33, tightened by a threaded head 34 upon the threaded end 35 thereof, which thus serves simultaneously to affix the holder and to affix the clamp sleeve in desired position upon the cross-arm.

The presser shank S extends through a transverse aperture 36 in holder 30 and is adjustably clamped in position by the knob 37 of a bolt 38 threaded into the holder and engaging the presser shank.

The presser shank is desirably made up of an upper sleeve 39 which extends through the holder and is clamped by the bolt 38, and a lower rod 40 telescoped into said sleeve and connected thereto by a coil spring 41 enclosed in said sleeve, affixed at one end as for instance by nut 42 to the rod and affixed at the other end as at 43, desirably in the wall of the sleeve 39. Desirably, the upper end of the sleeve has an enlargement or button 44 thereon for convenience in handling. The lower end of the rod 40 is desirably threaded at 45 to permit the removable mounting thereon of the presser head F which is equipped with a suitable socket 46 integral therewith for such purpose.

The presser heads desirably come in sets of various conformations and sizes appropriate to

the particular parts of the body to be treated.

In Fig. 7, for instance, is shown a presser head useful for treating an elongated member such as the upper arm or the thigh. The socket **46** is affixed to a rigid longitudinal bar **47** to which is soldered or welded one side of a column spring **48**. The contiguous convolutions of such column spring afford intimate contact with and apply pressure to contiguous regions of the body, resiliently resisted by spring **41**.

In like manner Fig. 8 shows an embodiment in which the bar **47'** is curved in a plane at right angles to the axis of socket **46** and Fig. 9 shows a member in which the bar 47^2 is curved in the plane of the axis of socket **46**. Each of bars **47'** and 47^2 mounts a column coil spring **48'** and 48^2 respectively, soldered or welded thereto. The embodiment of Fig. 8 would serve for engagement of a flat body area adjacent a protruding organ, such as the breast for instance, while the embodiment of Fig. 9 would serve to straddle a leg or arm for instance, in each case to apply sustained pressure.

Fig. 10 shows an embodiment for localized point pressure, where a limited locality or localities are to be treated. In this embodiment a simple rigid round disk-shaped head **50** is screwed about the end of the rod **40** at socket **46**.

In Fig. 1 is shown another embodiment especially useful for treating a soft portion of the body such as the buttocks, for instance. In this embodiment an elongated coil spring **51** is telescoped at its opposite ends over two of the presser shanks **52** and **53**. The end convolutions of the spring may embrace the lower threaded ends of the respective presser shanks and the intervening length of the spring **51** extends in a generally U-shaped conformation between the mounting shanks for resilient pressure against the body. The spring may extend as shown in the right of Fig. 1 between two presser shanks **52** and **53** carried by the same carrier arm **14**, or as shown at the left of said Fig. 1, it may extend from shank **54** on one cross shaft **16** to a corresponding shank **53** on a second cross shaft **15**.

It will be seen that the device may be mounted on the operating table or on the floor adjacent the operating table and that the carrier arms and cross arms may readily be adjusted and clamped in position and the suitable presser heads be affixed in the manner set forth at each region where desired. The equipment may thus be adapted for resiliently applying the desired pressure to any one or more locations on the body of a patient of any size, and in the specific embodiment shown, the device is adapted for such treatment of two patients simultaneously but could be extended for treatment of as many patients as desired.

Manifestly the device could be adapted for treatment of a patient in sitting rather than reclining position, if desired.

As many changes could be made in the above construction, and many apparently widely different embodiments of this invention could be made without departing from the scope of the claims, it is intended that all matter contained in the above description, or shown in the accompanying drawings, shall be interpreted as illustrative and not in a limiting sense.

Having thus described my invention, what I claim as new and desire to secure by Letters Patent of the United States is:

1. A mechano-therapeutic apparatus comprising a standard having a plurality of carrier bars, each having a mounting clamp on the standard and adjustable longitudinally thereof and one or more members, each having a presser head, said members being adjustably clamped with respect to the corresponding carrier bar, each of said members including resilient means interposed between the clamp and the head thereof.

2. A mechano-therapeutic apparatus comprising a standard, a horizontal carrier bar adjustably mounted thereon for selected height upon said standard, a cross bar adjustably mounted upon said carrier bar for selected distance thereof from said standard, a body presser member adjustably mounted upon said cross bar and at right angles thereto, and resilient means interposed between the presser member and the cross bar for resiliently limiting the pressure against the body.

3. A mechano-therapeutic apparatus, comprising a standard, a carrier arm, a mounting socket for the latter, a clamp rigid with said socket, adjustable in position longitudinally and peripherally of said standard, and a body presser loop comprising a U shaped member having a pair of legs and a coil spring body pressing connector therebetween, said carrier arm having mounting clamps adjustably clamping said legs in place.

4. In a mechano-therapeutic apparatus, a carrier bar, a clamp encompassing the same, a presser shank holder affixed to said clamp, a presser shank extending transversely through said holder, a bolt for affixing said presser member in position, said presser member including a sleeve, a rod telescoped therein, a body presser head mounted on the end of said rod, and a coil spring within said tube affixed at one end to the rod and at the other to the tube and resisting the pressure against the body.

5. The combination recited in claim 4, in which the presser head is removable from the shank for attachment thereto of any selected presser head of shape or conformation adapted to the portion of the body to be treated.

6. A body presser head for a mechano-therapeutic apparatus, comprising a bar having an attachment member rigidly affixed thereto and a coil spring body presser extending longitudinally of said bar and rigidly affixed thereto at each of its convolutions.

7. A mechano-therapeutic device comprising a standard, a horizontal carrier bar thereon, a mounting socket for an end thereof, a clamp rigid with the socket, encompassing said standard and adjustable longitudinally and peripherally of the latter, a pair of cross arms each having a mounting socket, clamps rigid with the respective sockets and encompassing the carrier bar, means for adjustably affixing each clamp in any position longitudinally and peripherally of the carrier bar, each of said cross bars having one or more holders adjustably mounted along the length thereof, and body presser shanks adapted to be adjustably clamped in the respective holders, one of said body presser shanks comprising a pair of rods mounted in passages through the respective holders, and a U-shaped coil spring body presser connector mounted at its ends upon said rods.

FLORENCE KELHOFFER.