US00D350117S

United States Patent [19]

Lim

[11] Patent Number: Des. 350,117

[45] Date of Patent: ** Aug. 30, 1994

[54] HOUSING FOR A DATA STORAGE DEVICE

[75] Inventor: **Henry L. C. Lim**, Singapore, Singapore

[73] Assignee: **Conion Electronic(s) PTE Limited**, Singapore, Singapore

[**] Term: **14 Years**

[21] Appl. No.: **909,449**

[22] Filed: **Jul. 6, 1992**

[30] **Foreign Application Priority Data**

Jan. 4, 1992 [GB] United Kingdom 2019988

[52] **U.S. Cl.** **D14/100**

[58] **Field of Search** 360/99.12; 361/390-395; D14/100, 102, 108, 109; D13/162, 184, 199

[56] **References Cited**

U.S. PATENT DOCUMENTS

D. 329,229 9/1992 Koch et al. D14/109

D. 332,256 1/1993 Lewis D14/109

Primary Examiner—Wallace R. Burke

Assistant Examiner—Freda S. Nunn

Attorney, Agent, or Firm—Fisher, Christen & Sabol

[57] **CLAIM**

The ornamental design for a housing for a data storage device, as shown and described.

DESCRIPTION

FIG. **1** is a top front and side perspective view of a housing for a data storage device showing the new design;

FIG. **2** is a side view thereof, the opposite side is identical in appearance;

FIG. **3** is a front view thereof;

FIG. **4** is a top plan view thereof, the bottom plan view is unornamented; and,

FIG. **5** is a rear view thereof.

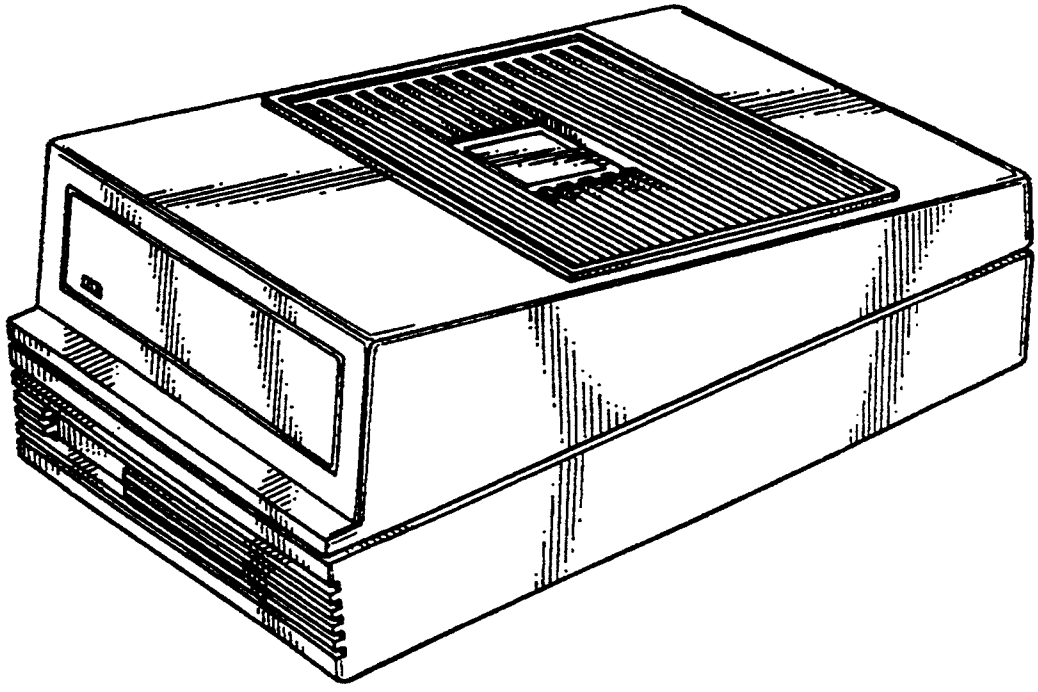

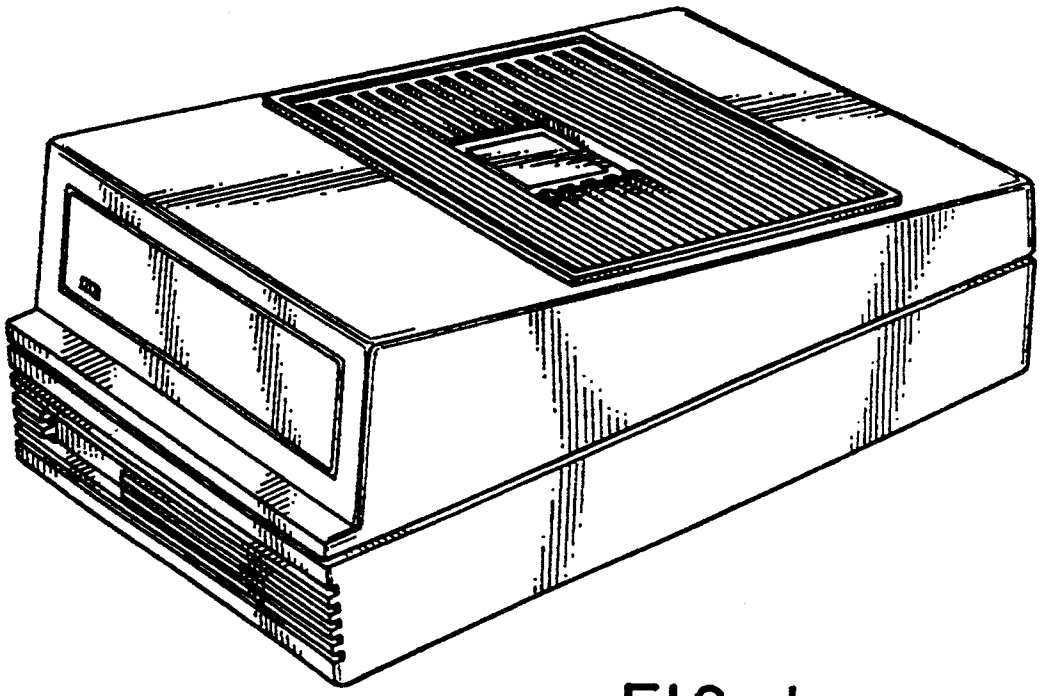

FIG. 1

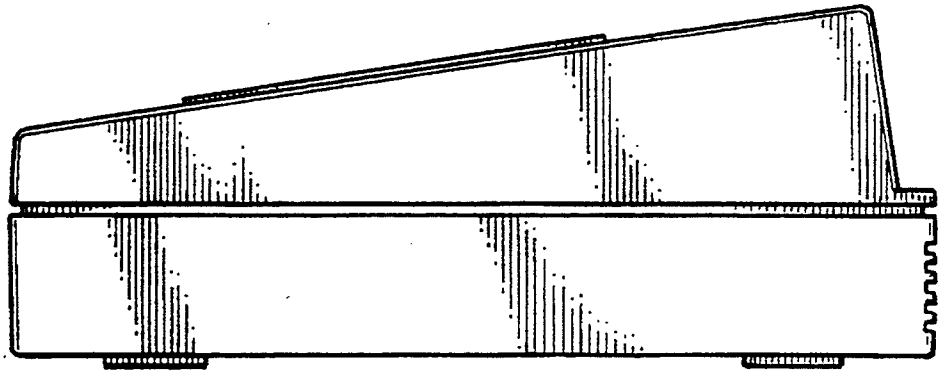

FIG. 2

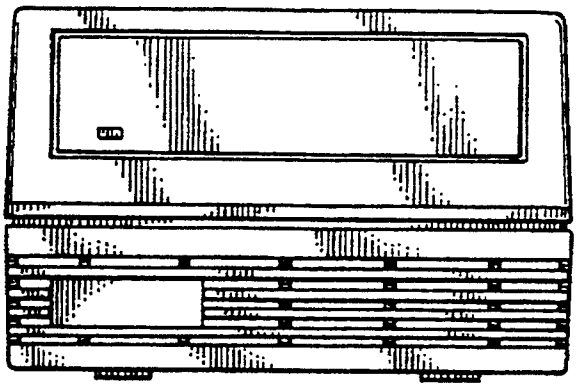

FIG. 3

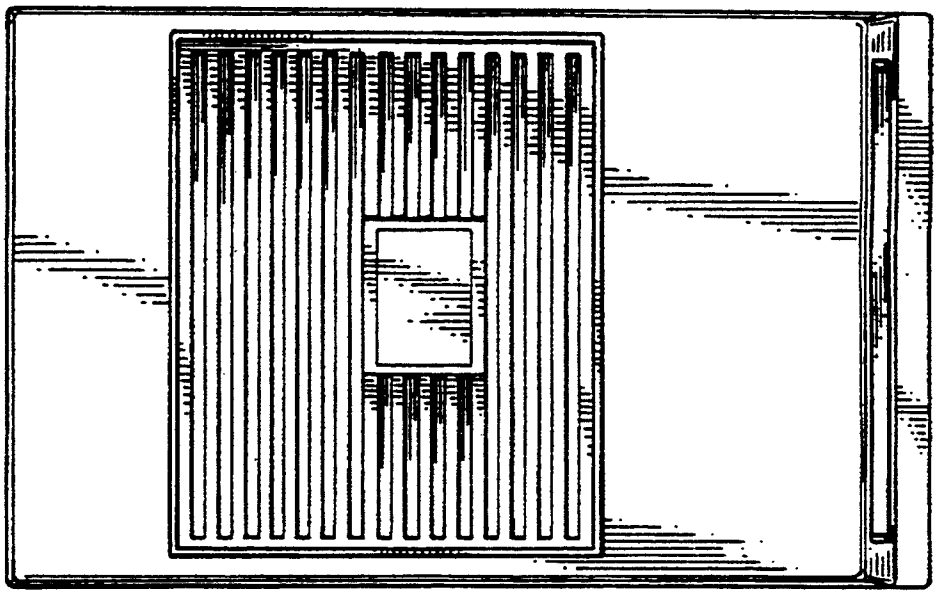

FIG. 4

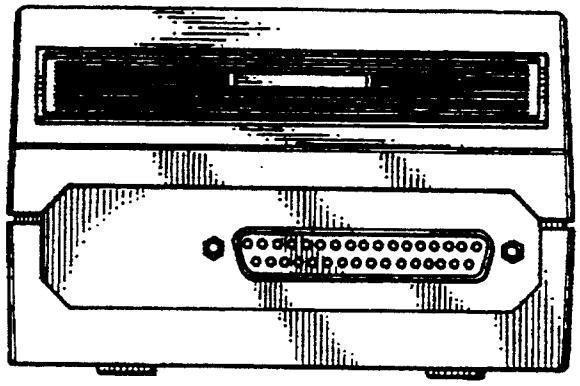

FIG. 5