United States Patent

[11] **3,623,051**

[72] Inventors **Alvin R. Juno;**
Jasper R. Pruitt, both of Lubbock, Tex.

[21] Appl. No. **45,714**
[22] Filed **June 12, 1970**
[45] Patented **Nov. 23, 1971**
[73] Assignee **Weather Watch Instruments**
Lubbock, Tex.

[54] **ALARM BAROMETER**
12 Claims, 2 Drawing Figs.

[52] **U.S. Cl.** **340/236,**
73/386, 200/83 C, 340/214
[51] **Int. Cl.** **G08b 21/00,**
H01h 35/34
[50] **Field of Search** 340/240,
241, 236, 239, 420, 421, 220, 266, 214; 200/83 C,
83 L, 81.9 M; 73/170, 384, 386, 387

[56] **References Cited**
UNITED STATES PATENTS

2,801,408	7/1957	Drasky	340/236
2,976,522	3/1961	Dowling	340/236 X

Primary Examiner—John W. Caldwell
Assistant Examiner—Daniel Myer
Attorney—Charles W. Coffee

ABSTRACT: An aneroid barometer with a U-spring has a magnet on the end of a long arm attached to the U-spring, so that the magnet will have greater movement than the U-spring. The magnet is proximate a magnetic-responsive electrical switch which is connected to an alarm having self-contained batteries. The position of the switch may be adjusted so that the alarm is sounded at a predetermined low barometric pressure.

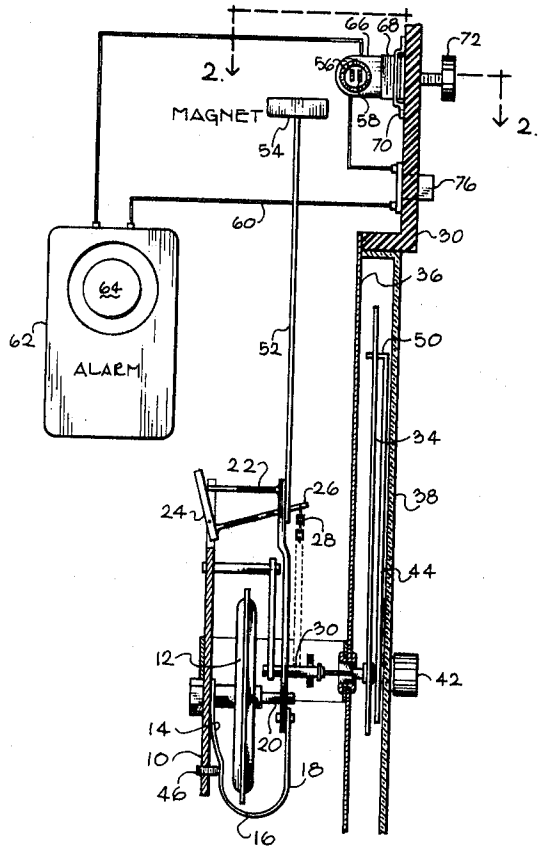

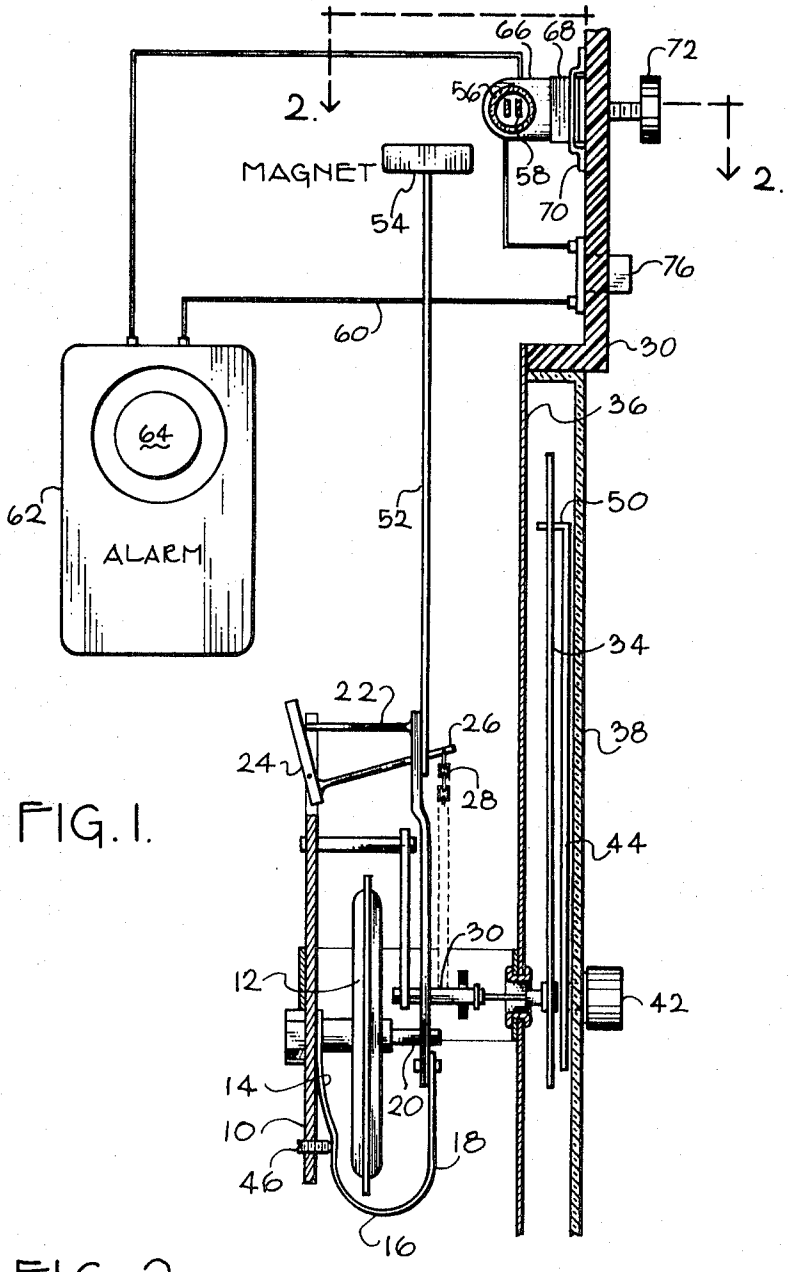

FIG. 1.

FIG. 2.

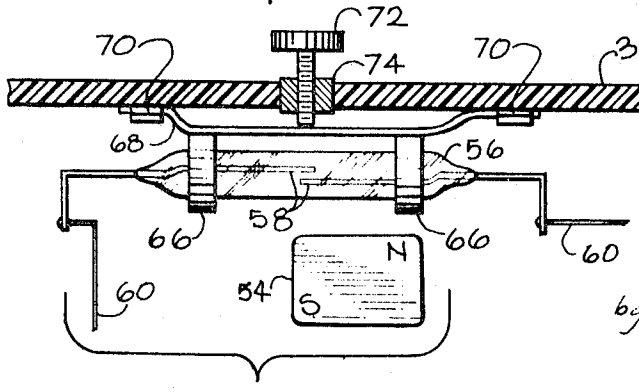

INVENTORS:
ALVIN R. JUNO
AND
JASPER R. PRUITT
by C. N. Coffee
Atty.

ALARM BAROMETER

A. BACKGROUND OF THE INVENTION

1. Field of the Invention

This invention relates to measuring and testing instruments and more particularly to aneroid barometers with an electrical alarm connected thereto.

2. Description of the Prior Art

Aneroid barometers have been known for about 100 years. For inexpensive aneroid barometers, the construction is settled with an evacuated bellows having a U-spring surrounding the bellows. A mechanical multiplying device is attached to the U-spring, resulting in an increased movement upon a chain which is wound around a spring-biased shaft. The point on the spring-biased shaft indicates the barometric pressure. See U.S. Pat. No. 1,612,344. Also, some different types of barometers have alarms connected with them, but, in general, these alarms are extremely complicated and therefore, expensive and have delicate mechanisms. U.S. Pat. No. 3,029,422.

Also known to the prior art are self-contained signal devices which have small batteries together with vibrators connected to a loud speaker so that a very small storage battery produces a large audible signal.

B. SUMMARY OF THE INVENTION

1. New and Different Function

I have invented an alarm barometer which is extremely simple; therefore, it is inexpensive and of rugged construction. I have achieved this by attaching a long arm to the U-spring with a magnet on the end of the arm. The magnet operates a magnetic responsive switch which operates the alarm.

2. Objects of this Invention

An object of this invention is to provide an alarm aneroid barometer.

Another object of this invention is to provide such a barometer which sounds an audible alarm at a preset pressure which may be adjustably set and with a device on the barometer for testing to check if the alarm sounds at the preset pressure.

Further objects are to achieve the above with a device that is sturdy, compact, durable, lightweight, simple, safe, efficient, versatile, and reliable, yet inexpensive and easy to manufacture, adjust and maintain.

The specific nature of the invention, as well as other objects, uses, and advantages thereof, will clearly appear from the following description and from the accompanying drawing, the different views of which are not necessarily to the same scale.

C. BRIEF DESCRIPTION OF THE DRAWING

FIG. 1 is a sectional view with some parts shown schematically, illustrating one embodiment of this invention.

FIG. 2 is a detail taken substantially on line 2—2 of FIG. 1.

D. DESCRIPTION OF THE PREFERRED EMBODIMENT

Referring more particularly to the drawing, there is represented an aneroid barometer. These barometers are well known and include framework **10** to which is attached bellows **12**. Attached to the frame **10** is a frame leg **14** of U-spring **16**. Moving leg **18** of the U-spring **16** is attached by stub **20** to the bellows **12**. The top of the moving leg **18** has strut **22** which bears against rocker plate **24**. The rocker plate is pivoted to the frame **10** and chain lifter **26** is attached thereto. Chain **28** extends from chain lifter **26** to the shaft **30**, which is journaled into the frame **10** for rotation and is biased by spiral spring **32**. Pointer **34** upon the shaft **30** cooperates with dial **36** to indicate the barometric pressure. Thus the pointer **34** is geared to the U-spring **16**. Transparent cover **38** is attached to housing **40**. The frame **10** is connected to the housing **40** through the dial **36**. Button **42** attaches to indicator **44** through the transparent cover **38**. Adjustment screw **46** is threaded into the frame **10** and bears against the frame leg **14** to "zero" the barometer to correlation with other barometer readings.

Those familiar with aneroid barometers will recognize that everything which has been specifically described in the preferred embodiment to this point is old, well known to the art, and commercially available on the market.

The changes involved with this invention include providing bent pusher **50** upon the end of the indicator **44**. The pusher **50** is such that when the button **42** is rotated, it will push pointer **34** for purposes which will be described later.

Long arm **52** is attached to the moving leg **18** of the U-spring **16** so that it extends as an extension of the moving leg **18**. This attachment may be made by any convenient means as by soldering or by other conventional metal attachment means.

Magnet **54** is attached on the end of long arm **52**. Although the drawing is not to scale, it will be seen that the distance from the bight of the U-spring **16** to the magnet **54** is about 6 times the distance from the bight of the U-spring to stub **20** wherein the U-spring is connected to the bellows **12**; thus, the magnet **54** will have approximately 6 times the movement of the bellows **12**. Although this mechanical multiplication of movement is not as great as results upon the tip of the pointer **34**, it is considerable magnification.

Magnetic responsive electrical switch **56** is attached to the housing **30** adjacent to the magnet **54**. As the magnet moves close to the switch **56**, it causes the reeds or contacts **58** of the switch **56** to close. The switch **56** is connected by insulated wiring **60** to alarm box **62**. As previously stated, audible alarms are well known on the market with self-contained batteries which upon connecting the wiring **60** together cause the loud speaker **64** to give a large, audible alarm.

The reeds **58** of the switch **56** are enclosed in a glass capsule and the glass capsule is connected by bands **66** to leaf spring **68**. The leaf spring is inserted through loops **70** which are attached to the housing **30**. Alarm adjustment screw **72** is threaded through grommet **74** set in the housing **30** and bears against leaf spring **68**.

OPERATIONS

It may be seen that when the barometric pressure drops, the bellows expand, pushing the movable leg **18** away from the frame leg **14**. This movement of the movable leg **18** causes arm **52** to carry the magnet **54** towards the switch **56**. When the magnet nears the switch **56**, it causes the reeds **58** to close, which will close the circuit to the alarm **62**, causing a loud, audible sound upon the loud speaker **64**. The alarm may be shut off by manual switch **76**, which is connected in series with the magnetic responsive switch **56** by the wiring **60**.

The desired pressure reading at which alarm **62** is to sound is set by pushing the pointer **34** with the pusher **50**, which is specially provided by bending the indicator **44** and rotating the pointer **34** to the pressure reading desired. The movement of the pointer will be transmitted through the gearing, including the chain **28** and rocker plate **24** to the movable leg **18** of the U-spring **16**. This movement will be transmitted to the magnet **54**. With the pointer **34** at the pressure reading which is desired for the alarm to be sounded, then the magnetic switch **56** is moved by rotation of the alarm adjusting screw **72** so that the alarm sounds. The alarm can be shut off either by the manual switch **76** or by release of the pointer **34** by rotation of the button **42** and its attached indicator. The, with the manual switch **76** in the closed position, the alarm **62** may be tested at any time for operation by rotating the pointer **34** with the pusher **50**. I.e., all the user needs to do to assure himself that the batteries of the alarm **62** are functioning properly, the alarm working, and the position of the magnetic-responsive switch **56** is in proper position is to rotate the button **42** so that the pusher **50** pushes the pointer **34** to the pressure at which it is desired the alarm sound.

Thus it will be seen that I have provided an inexpensive simple, rugged device to sound an alarm when the barometric pressure reaches a predetermined low reading.

The embodiment shown and described above is only exemplary. I do not claim to have invented all the parts, elements or

steps described. Various modifications can be made in the construction, material, arrangement and operation, and still be within the scope of my invention. The limits of the invention and the bounds of the patent protection are measured by and defined in the following claims. The restrictive description and drawing of the specific example above do not point out what an infringement of this patent would be, but are to enable the reader to make and use the invention.

I claim as my invention:

1. In an aneroid barometer having
   a. a frame,
   b. a bellows attached to the frame,
   c. a U-spring,
   d. one leg of the U-spring attached to the frame and the other connected to the bellows;
   e. the improvement comprising in combination with the above:
   f. a long arm attached to the U-spring,
   g. a magnet attached on the long arm,
   h. a magnetic-responsive switch structurally attached to said frame near the magnet,
   j. so that when the magnet moves near the switch, the switch closes.

2. The invention as defined in claim 1 with the additional limitations of
   k. a pointer journaled to said frame and geared to said U-spring, and
   m. means connected to said frame for moving said pointer and thus the U-spring.

3. The invention as defined in claim 1 with the additional limitation of
   k. said switch mounted for adjustable movement toward and away from said magnet.

4. The invention as defined in claim 3 with the additional limitations of
   m. a pointer journaled to said frame and geared to said U-spring, and
   n. means connected to said frame for moving said pointer and thus the U-spring.

5. The invention as defined in claim 1 with the additional limitation of
   k. an alarm electrically connected to said switch which produces an audible signal responsive to the closing of said switch.

6. The invention as defined in claim 5 with the additional limitation of
   m. said switch mounted for adjustable movement toward and away from said magnet.

7. The invention as defined in claim 5 with the additional limitations of
   m. a pointer journaled to said frame and geared to said U-spring, and
   n. means connected to said frame for moving said pointer and thus the U-spring.

8. The invention as defined in claim 7 with the additional limitation of
   o. said switch mounted for adjustable movement toward and away from said magnet.

9. The invention as defined in claim 5 with the additional limitations of
   m. said alarm being a self-contained unit including batteries, and
   n. a manual switch electrically connected in series with the alarm and the magnetic-responsive switch.

10. The invention as defined in claim 9 with the additional limitation of
   o. said switch mounted for adjustable movement toward and away from said magnet.

11. The invention as defined in claim 9 with the additional limitations of
   o. a pointer journaled to said frame and geared to said U-spring, and
   p. means connected to said frame for moving said pointer and thus the U-spring.

12. The invention as defined in claim 11 with the additional limitation of
   q. said switch mounted for adjustable movement toward and away from said magnet.

* * * * *