US00D364862S

United States Patent [19]

Hilbrink et al.

[11] Patent Number: Des. 364,862

[45] Date of Patent: **Dec. 5, 1995

[54] **COMPUTER PALM MOUSE**

[75] Inventors: **Johan O. Hilbrink**, Blue Ash, Ohio; **Donald W. Carr**, Birmingham, Mich.; **Francis J. McFadden**, Beavercreek, Ohio

[73] Assignee: **NCR Corporation**, Dayton, Ohio

[**] Term: **14 Years**

[21] Appl. No.: **35,071**

[22] Filed: **Feb. 21, 1995**

Related U.S. Application Data

[62] Division of Ser. No. 4,251, Jan. 29, 1993, Pat. No. Des. 355,900.

[52] **U.S. Cl.** **D14/114**

[58] **Field of Search** ..... D14/100, 114; D13/158; D21/48; 178/18–19; 200/5 R, 5 A, 6 R, 6 A; 213/148 B; 273/148 B; 345/156–167; 74/471 XY

[56] **References Cited**

U.S. PATENT DOCUMENTS

D. 272,921	3/1984	Kim	D14/114 X
D. 281,776	12/1985	Griffin	D21/48 X
D. 292,224	10/1987	Trunbull	D21/189
D. 307,739	5/1990	Grant	D13/168
D. 309,449	7/1990	MacDonald et al.	D14/114
D. 317,950	7/1991	Tse	D21/48
D. 318,496	7/1991	Tse	D21/48
D. 331,398	12/1992	Clouss et al.	D14/114
4,862,165	8/1989	Gart	341/20
4,905,001	2/1990	Penner	341/20
4,954,817	9/1990	Levine	345/179

Primary Examiner—Melanie H. Tung
Attorney, Agent, or Firm—Paul W. Martin

[57] **CLAIM**

The ornamental design for a computer palm mouse, as shown and described.

DESCRIPTION

FIG. **1** is a bottom perspective view of a computer palm mouse showing our new design;
FIG. **2** is a front view of the article of FIG. **1;**
FIG. **3** is a rear view of the computer palm mouse of FIG. **1;**
FIG. **4** is a right side view of the computer palm mouse of FIG. **1;**
FIG. **5** is a left side view of the computer palm mouse of FIG. **1;**
FIG. **6** is a top view of the computer palm mouse of FIG. **1;** and,
FIG. **7** is a top perspective view of the computer palm mouse of FIG. **1.**

1 Claim, 3 Drawing Sheets

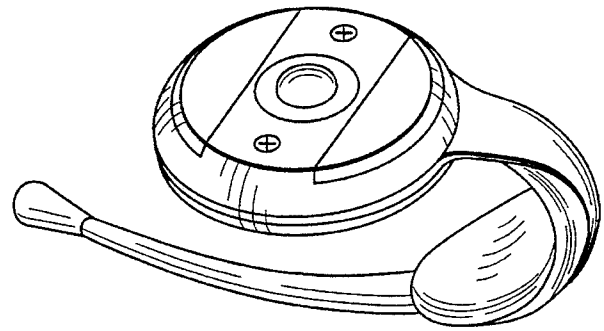

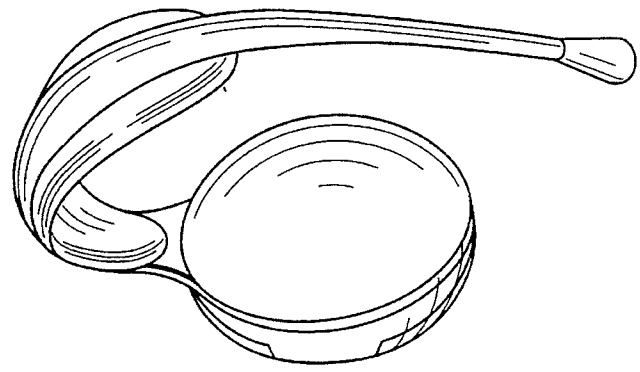

FIG. 1

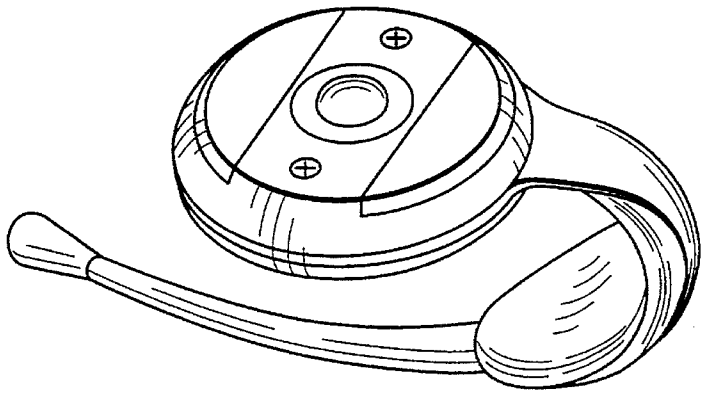

FIG. 2

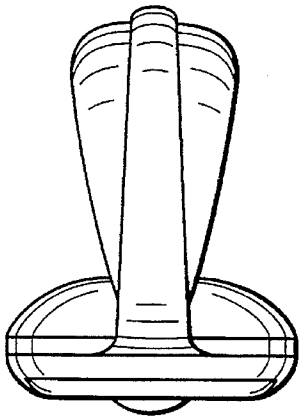

FIG. 3

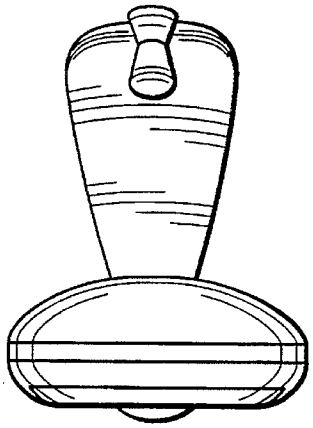

FIG. 4

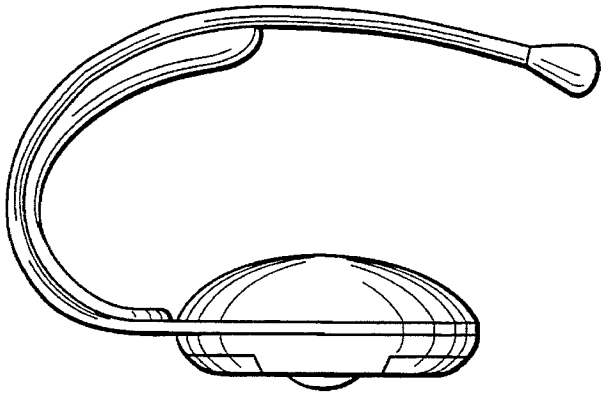

FIG. 5

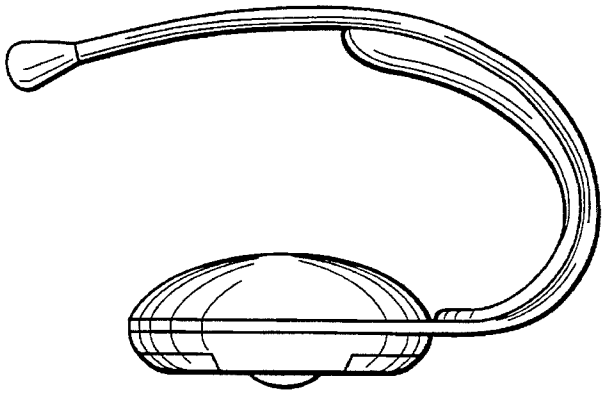

FIG. 6

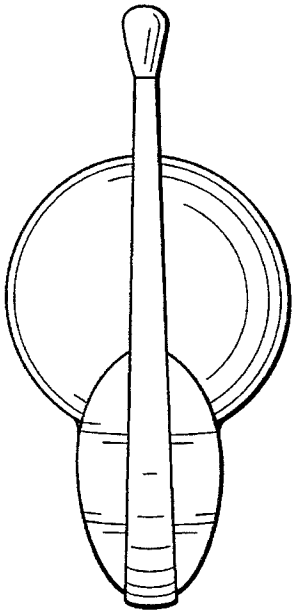

FIG. 7

