June 8, 1965 J. L. HUDSON 3,187,650

COMPENSATION FOR VERTICAL COMPONENT OF EARTH'S MAGNETIC FIELD BY COLOR TRIAD DISPLACEMENT

Filed Dec. 30, 1955

Fig. 1.

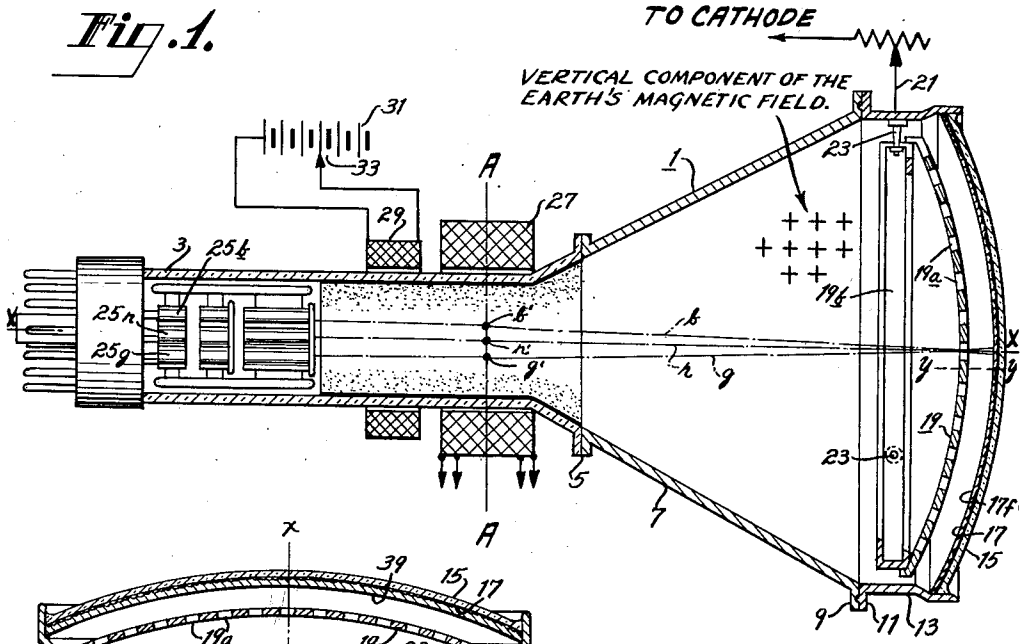

Fig. 4.

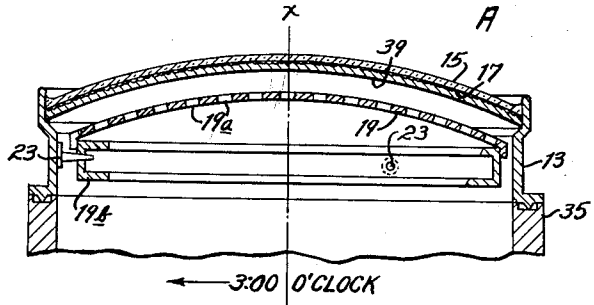

Fig. 2.

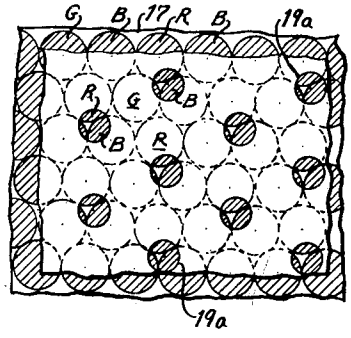

Fig. 3.

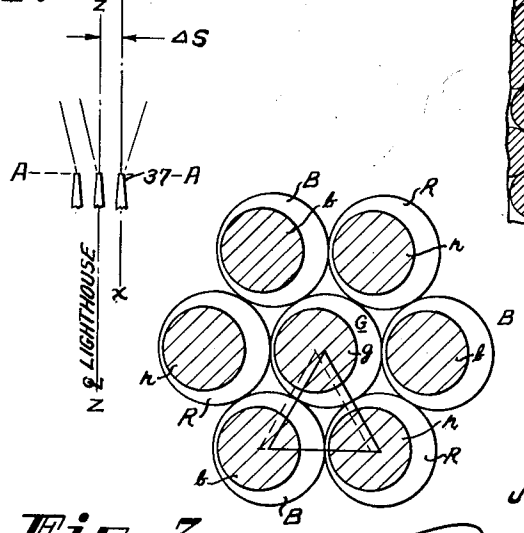

INVENTOR.
JOHN L. HUDSON

BY Roderick Malcolm

ATTORNEY

United States Patent Office

3,187,650

Patented June 8, 1965

3,187,650

COMPENSATION FOR VERTICAL COMPONENT OF EARTH'S MAGNETIC FIELD BY COLOR TRIAD DISPLACEMENT

John L. Hudson, Lancaster, Pa., assignor to Radio Corporation of America, a corporation of Delaware

Filed Dec. 30, 1955, Ser. No. 556,649

1 Claim. (Cl. 95—1)

This invention relates to improvements in color-kinescopes and other (e.g. camera, radar and stereoscopic) cathode-ray tubes of the kind containing an apertured mask through which beam-electrons pass in their transit to preselected elemental areas on the mosaic target surface of a nearby screen, and to improvements in the art of making such tubes.

In the operation of cathode-ray tubes of the subject ("masked-target") variety the accuracy with which the beam-electrons strike the individual elemental areas of the mosaic-screen may be adversely affected by the presence of the earth's magnetic field in the paths of the electrons. This fact has long been recognized and it is now more or less standard practice to compensate for the beam-deflecting effect of the earth's field by providing such tubes with a magnet-assembly or a "purity coil" capable of directing the electron-beams to paths which terminate, ideally, at the centers of the individual electron-sensitive dots (or lines) which make up the mosaic target-surface of the screen. Such auxiliary devices operate quite satisfactorily to perform their intended functions but their use is subject to certain disadvantages, e.g.: In instances where the auxiliary magnetic field must be made of a relatively large magnitude, to effect the desired correction, the focus (as distinguished from the direction or path) of each beam becomes distorted as it approaches the screen and this adversely affects the *resolution* of the resulting image, picture or raster. Picture quality may be further adversely affected if the "purity" field interacts with the field of some other internal or external component of the set.

The present invention provides a cathode-ray tube of the masked-target variety wherein picture defects occasioned by the presence of the earth's magnetic field in the path of the beam-electrons are minimized by the provision of a target-assembly of a construction which permits the use of a correcting field of a magnitude considerably less than that of the auxiliary fields heretofore employed for the purpose of maintaining said electrons in their intended paths.

The principle upon which the invention is based will the more readily be understood when it is appreciated that the *vertical* component of the earth's magnetic field, at any particular geographic location, has a *constant* effect upon an electron-beam regardless of the orientation of the tube in which the beam is contained, provided only that the axis of the tube is substantially horizontal. (The effect of the *horizontal* component of the earth's field upon an electron beam tube varies, at any given geographic location, with the orientation of the tube.)

The fact that the *vertical* component of the earth's field has a *constant* effect upon an electron-beam permits a constant correction factor (heretofore supplied entirely by an auxiliary magnetic device) to be "built in" the tube. Stated generally, this is achieved by the provision of a screen assembly wherein the screen and its mask are offset a limited distance from the (horizontal) axis of the tube *during the screen-plotting operation* and are subsequently mounted within the tube in a position whereat (a) the pattern of apertures in the mask is centered on said axis and (b) the center of the screen-pattern is offset from said axis.

In making a screen-assembly, in accordance with the invention, the relative location of the screen pattern, and of the pattern of apertures in the mask, with respect to the location of the electron-gun or guns, is fixed during manufacture of the tube preferably by offsetting the screen-assembly (i.e. the screen and its mask) with respect to the light source employed in plotting the location of the elemental areas of which the mosaic target surface of the screen is comprised. When a particular tube is to be employed at a particular geographic location the exact degree of off-set employed in the screen-plotting operation can be dictated by the magnitude of the vertical component of the earth's magnetic field at that particular geographic location. In this case, no auxiliary magnetic field whatsoever is required to compensate for the *vertical* component of the earth's field. On the other hand, where tubes are to be made for use anywhere within a large geographical area (say the entire United States), the degree or amount of off-set used in the screen-plotting operation can be dictated by the *average* magnitude of the *vertical* component of the earth's magnetic field over that entire area. In this latter case the magnitude of the field provided by the auxiliary magnetic device is ordinarily so small that it has practically no adverse effect upon the *resolution* of the image or raster and, in any event, is less than is required for tubes made in accordance with the prior art.

The invention is described in greater detail in connection with the accompanying single sheet of drawings, wherein:

FIG. 1 is a partly diagrammatic longitudinal sectional view, as viewed from above, of a 3-gun tri-color kinescope of the shadow-mask dot-screen variety; the drawing being marked with a line (y—y) showing that the center of the mosiac pattern of the screen is off-set laterally, from the central axis (x—x) of the tube, as dictated by the present invention;

FIG. 2 is an enlarged fragmentary rear-elevational view of the screen unit of the color-kinescope of FIG. 1;

FIG. 3 is a greatly enlarged front elevational view of the central portion of a color dot-screen similar to the one shown in FIG. 2 but with the drawing marked to illustrate a lack of register between the screen-dots and electron-spots occasioned, in a conventional tube, by the effect of the vertical component of the earth's magnetic field upon the path of the electrons;

FIG. 4 is a partly diagrammatic sectional view of a photographic lighthouse showing the apertured mask and screen-plate of a color-kinescope set-up thereon in an off-axis position with respect to the light-source position, as taught by the present invention.

One type of cathode-ray tube to which the invention is applicable is a 3-gun tri-color kinescope of the "shadow-mask" variety. As shown in FIG. 1 such a kinescope may comprise an evacuated envelope **1** having a glass neck portion **3** connected by a suitable glass-to-metal seal **5** to the small end of a metal cone **7** which, in turn, is connected by complementary sealing flanges **9** and **11** to a cylindrical metal front-end portion or "cap" **13**. The cap **13** terminates in a spherically curved face-plate **15**, the concave inner surface of which comprises the mosaic screen **17** of a bi-part screen-unit **17**, **19** of the shadow-mask variety.

The mosaic screen **17** (see FIG. 2) comprises a multiplicity (usually 300,000 or more) of "triads" (i.e. groups-of-three) of red (R), blue (B) and green (G) color-phosphor dots. The phosphor-dots are here arranged in a hexagonal pattern; that is to say each dot is surrounded by six other dots, alternate ones of said other dots being of a second color-response characteristic and the intermediate ones of said other dots exhibiting a third color-response characteristic. An electron-transparent, light-reflecting, metallic (e.g. aluminum) film **17***f* (FIG. 1)

covers the entire target surface of this dot-like mosaic-screen, and forms an electrical connection to the cap 13 of the envelope 1.

The other element or "shadow mask" of the bi-part screen-unit 17, 19 comprises a suitably curved thin-metal plate 19 containing a multiplicity of apertures 19*a* arranged in the same systemmatic (hexagonal) pattern as the phosphor screen-dots; there being one mask aperture for each triad (RBG) of dots. As indicated by the single electrical connection 21 (FIG. 1) the metallized screen 17 and the mask 19 are here operated at the same potential (e.g. 18 kv.) to provide a "field-free" space therebetween, as is usual in color-kinescopes operating on the shadow-mask principle. The mask has an integral rim 19*b* and is supported about said rim on three or more pegs 23 which project radially inward from the inner surface of the cap portion 13 of the envelope. The connection between the pegs 23 and the rim 19*b* is such as to permit the mask to be removed from the cap during the three (later described) emulsion-coating and developing operations incident to laying down the three color-phosphors (RBG) on the glass screen-plate 15.

The tubular glass neck 3 of the envelope 1 contains a battery of three electron-guns 25*r*, 25*b* and 25*g* each of which is allotted to a particular screen-color. The guns are here shown arranged delta fashion about the horizontal axis *x*—*x* of the envelope (as in Schroeder USP 2,595,548) so that their beams converge near a surface of the mask 19, where their paths may cross and proceed to the different color-phosphor dots. Alternatively, a single beam may be employed, in which latter case auxiliary means may be provided as, for example, in Jenny 2,611,099, for sequentially shifting the single beam to positions corresponding to that of the several beams in a multi-gun tube.

Referring still to FIG. 1. Here, as in the Schroeder patent, the required horizontal and vertical scanning movements are applied to all three of the electron beams from the guns 25 by a common deflecting yoke 27 which will be understood to comprise two sets of electromagnetic coils (indicated by the double current leads) disposed at right angles to each other on the glass neck 3. The color-centers *r'*, *b'*, *g'* of the three beams *r* (red) *b* (blue) and *g* (green) are here shown in the normal plane-of-deflection AA, i.e. approximately at the center of the yoke 27.

As in Friend USP 2,719,249 an auxiliary magnetic field designed to influence the paths of the three beams is provided by a "purity coil" 29 mounted on the neck 3 surrounding the horizontal axis *x*—*x* of the tube and adjustably energized by a source of current, exemplified by the battery 31 and rheostat 33.

The color-tube of FIG. 1, as thus far described, is of more or less standard construction. However, it will be observed that the drawing is marked with a horizontal line or axis *y*—*y* which, as will hereinafter more fully appear, passes through the center of the mosaic pattern of phosphor dots on the screen, and is off-set from the axis *x*—*x*, about which the electron guns 25 are grouped, a distance calculated to compensate for the lateral deflection forces to which the electron-beams are subjected by the vertical component of the earth's magnetic field. the amount of, and the direction in which, the mosaic pattern of the screen is off-set from the horizontal axis *x*—*x* of the tube is set forth in the following description of the manner in which the screen-unit is manufactured.

In the manufacture of cathode ray tubes of the masked target variety the relationship or "register" of the color-phosphor dots (or lines) and the mask-apertures is determined, usually, by light rays emanating from a small source located, successively, at points corresponding to the color-centers of the completed tube. When the tube is operated, electron-beams take the place of the light-rays that were used in plotting the location of the color phosphor areas. Hence one might assume that each beam would land squarely upon the particular dot toward which it is directed. Such, however, is not the case because the electron beams, unlike the light-rays, are subject to lateral deflection by the presence of the earth's magnetic field. Thus, referring now to FIG. 3, the effect of the vertical component of the earth's magnetic field, in the absence of compensation, is to deflect the beams *r*, *b* and *g* an appreciable distance to the left, as viewed by an observer looking at the screen from the front of the tube. The amount or degree of misregister produced by the vertical component of the earth's magnetic field is the vector summation of the misregister produced by said field in the gun region plus the misregister produced by said field in the space between the plane-of-deflection (A—A) and the screen. These two misregister components are oppositely directed and the actual misregister observed in an uncorrected tube is a difference error, in the direction of the larger component. At any given location the actual distance that the beams are moved off the centers of the elemental screen-areas (RBG) by the vetrical component of the earth's magnetic field is about twice as great in an unshielded glass tube than it is in a metal tube, or in one having a metal shield about its cone. Thus, it was observed that at Lancaster, Pennsylvania (where the vertical component of the earth's magnetic field is approximately 0.53 gauss), the amount of misregister at the center position of the screen of an unshielded 22" rectangular glass tri-color kinescope is approximately 8 mils whereas in a 21" tri-color tube having a metal envelope it is approximately 4 mils.

The general formula for determining the distance (ΔS) that the top cap and light-source must be displaced with respect to each other in order to place the phosphor dots at the terminals of the three electron-beams when the latter are subjected to the lateral deflecting force of the vertical component of the earth's magnetic field, is:

$$\Delta S = \Delta E \frac{P}{q}$$

wherein:

ΔE is the observed or calculated misregister due to the vertical component, in terms of mils, at any given geographic location, between the beam spots and phosphor dots at the center of an uncorrected tube of similar form and dimensions;

P is the distance between the tube's plane-of-deflection and the apertured mask and

q is the distance between the mask and screen as measured along the axis of the tube.

Assuming now that a mosaic screen-pattern has been plotted or laid down in accordance with the above formula, then the distance that said pattern should be off-set from the horizontal axis (*x*—*x*) of the finished tube is expressed by the formula:

$$\Delta E = \frac{q}{p} \Delta S$$

As a practical matter, the objects of the invention are achieved in an unshielded tube when ΔE is from 0.003 to 0.020 of an inch. In a shielded tube (e.g. one having a metal cone) ΔE may be of the order of from 0.0015 to 0.010 of an inch. As previously pointed out the direction of the off-set, north of the earth's magnetic equator, is to the left of an observer looking directly at the obverse surface of the screen, and south of said equator the off-set is in the opposite direction, i.e. to the right.

Where mass-production is involved it is not convenient to change the position of the screen-pattern for each geographic location at which the tubes are to be used. Nor is it necessary to do so since the objects of the invention are fulfilled by the provision of a degree of off-set which permits a reduction in the magnitude of the magnetic field supplied by the purity coil (or similar magnetic device) to a value which will not noticeably affect the resolution of the electron-images which the tubes are designed to handle. Accordingly, in applying

the above mathematical formula to the design of a masked-target tube for use at *any* location within a large geographic area the ΔE of said formula may comprise the *average* of the observed or calculated misregister over that entire area, and this average figure may be weighted by population, if desired. Thus, in the United States the average vertical component of the earth's magnetic field, weighted by population, is 0.536 gauss. This causes 4.25 mils misregistry toward the left of an observer looking into the front-end of a conventional 21" (metal) color-kinescope wherein P/q of the formula is equal to 28.2. In this case

$$(\text{since } \Delta S = .00425 \times 28.2)$$

the shift of the screen-assembly with respect to the axis (x—x) of the tube, required to effect the desired compensation is, approximately, 0.12 of an inch. Although this "lighthouse correction factor" (ΔS) may seem small it nevertheless represents the amount that each of the three beams would have to be moved in the neck of the tube if no correction is made in the location of the screen-pattern and represents a sizable fraction of the distance from one color center to another. Such a shift of the beams in the neck of the tube can only be achieved by the use of an auxiliary field of a magnitude capable of seriously affecting the focus of each beam.

In laying down the phosphor dots (or other elemental areas of the mosaic) on the screen-plate by the usual photographic projection method, the objects of the invention can be achieved either (a) by moving the light-source the required distance from its usual position at a particular "color-center," in the tube's plane-of-deflection, or (b) by leaving it in its said usual position and placing the front-end or "top-cap" (**13**) of the tube the required distance off the central axis x—x of the system. In FIG. 4 the first (a) of these alternative light-projecting methods is illustrated. Here the top-cap **13** of the tube is shown mounted on a table or pedestal **35** with its screen-plate **15** centered on the avis x—x about which the three guns (**25***r*, **25***b*, **25***g*—FIG. 1) are to be mounted in the finished tube. The light-source **37**, instead of being mounted for rotation about the central axis x—x is mounted for rotation about a point or axis z—z displaced from said axis by the amount required to bring said source to the three (red, blue and green) positions calculated to produce the desired offset in the color-phosphor pattern on the screen-plate **15**. The screen-assembly is here shown at that stage of its manufacture whereat the inner or "target" surface of the screen-plate **15** has been provided with a coating **39** comprising a photographic emulsion for recording the mosaic pattern impressed thereon by reason of the presence of the apertured mask **19** in the path of the light rays from the point source **37**. Assuming that the point **37**, in the plane-of-deflection A—A, is the one to be traversed by the "red" beam of the finished kinescope then the emulsion coating **39** on the inner surface of the glass plate **15** should contain a red-phosphor such, for example as manganese activated zinc phosphate. Since, as previously mentioned, the apertured shadow mask **19** is removably supported on the inner surface of the cap **13** by three or more pins **23**, it may be removed from the assembly during the three emulsion-coating and developing operations incident to laying down the three (red, blue and green) color-phosphors. When the tube cap **13** is restored to its indicated axial position on the pedestal **35** for the "blue" and the "green" exposures, the light-source must of course be moved 120° about the new axis z—z from its position during the previous exposure to bring it to the position of the "blue" and "green" guns, respectively.

When the screen plotting operation is complete the cap **13** is sealed to the open-end of the cone **7** in the usual way, that is to say with the pattern of apertures in the mask centered on the central axis x—x of the tube. However, it should be noted that since the light-source plotting operation was carried out with the light source in the previously described off-axis position the mosaic-pattern of the screen will be off-set from the tube axis in a direction and to the extent required substantially to compensate for the deflecting effect of the vertical component of the earth's magnetic field upon the beam-electrons employed in scanning the screen.

What is claimed is:

The method of compensating for misregister due to the beam-deflecting effect of the vertical component of the earth's magnetic field upon the beam-electrons in a cathode-ray tube of the kind having (i) a horizontal axis and (ii) a plane-of-deflection, and containing a mask having a multiplicity of apertures therein through which said beam-electrons pass in their transit to preselected elemental areas on the target surface of a near-by screen of the mosaic variety, said method comprising photographically laying-down a mosaic pattern of elemental screen-areas upon said target surface with the aid of light rays projected through said mask from a source located in said plane-of-deflection at a point off-set from a color-center in said plane a distance (ΔS) defined by the formula:

$$\Delta S = \Delta E \frac{P}{q}$$

where:

ΔE is the misregister, in terms of mils, between the beam-electrons and the elemental screen-areas near the center of an uncorrected tube of similar form and dimensions, due to the beam-deflecting effect of the vertical component of the earth's magnetic field,

P is the distance between said plane-of-deflection and said apertured mask and

q is the distance between said mask and screen as measured along said horizontal axis,

and thereafter mounting said mask and screen within said tube with said mask centered on said horizontal axis and said screen offset from said axis a distance (ΔE) dictated by the foregoing formula.

References Cited by the Examiner

UNITED STATES PATENTS

2,435,889	2/48	Kerridge	96—35
2,446,915	8/48	Filmer	96—35
2,669,672	2/54	Kaplan	313—70
2,682,620	6/54	Sanford	313—70
2,755,402	7/56	Morrell	313—70

ROBERT SEGAL, *Acting Primary Examiner.*

RALPH G. NILSON, GEORGE N. WESTBY,

Examiners.