(No Model.)

T. MILLEN.

CABLE CAR GRIP.

No. 590,438. Patented Sept. 21, 1897.

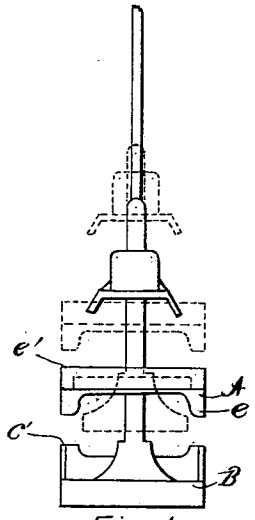

Fig. 1

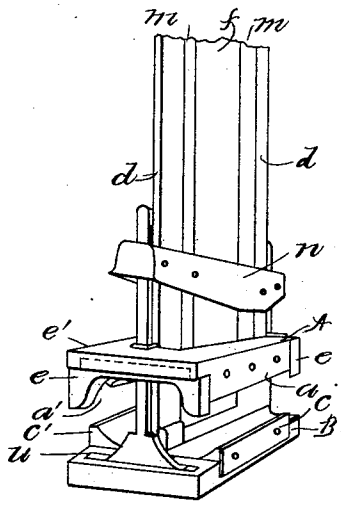

Fig. 2.

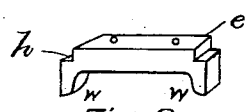

Fig. 3.

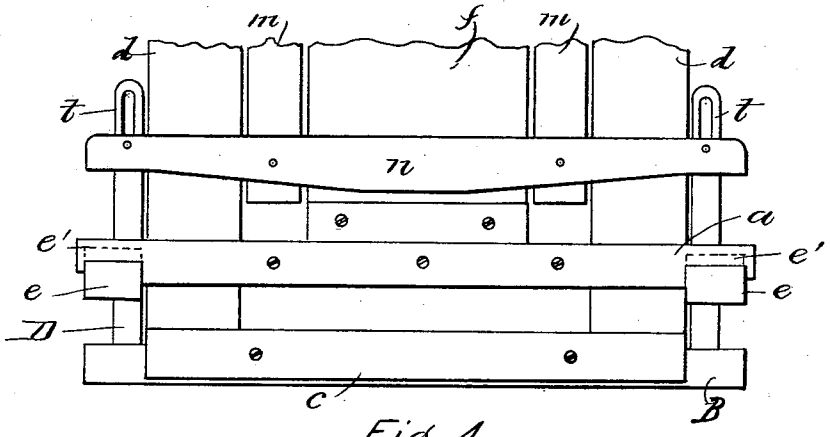

Fig. 4.

WITNESSES

F. H. Rittenour

[illegible]

INVENTOR

Thomas Millen

By John W. Steward

Assoc. Attorney

THE NORRIS PETERS CO., PHOTO-LITHO., WASHINGTON, D. C.

UNITED STATES PATENT OFFICE.

THOMAS MILLEN, OF NEW YORK, N. Y.

CABLE-CAR GRIP.

SPECIFICATION forming part of Letters Patent No. 590,438, dated September 21, 1897.

Application filed May 13, 1897. Serial No. 636,407. (No model.)

To all whom it may concern:

Be it known that I, THOMAS MILLEN, of the city, county, and State of New York, have invented a new and useful Improvement in Cable-Car Grips, of which the following is a specification.

My invention relates to cable-car grips; and the object of the invention is to provide a grip which may be released upon a curve sufficiently to permit the car to be brought to a standstill, if necessary, and which at the same time will retain the cable in its proper and usual position upon the gripping-surfaces of and between the jaws of the grip, though the curve may be one which extends in a direction away from the open side of the grip.

In the accompanying drawings I have illustrated my invention.

In said drawings, Figure 1 is an end view of a grip provided with my improvement. Fig. 2 is a perspective view of the grip shown in Fig. 1. Fig. 3 shows the preferred form of the element which constitutes the improvement which I have provided, and Fig. 4 is a side elevation of the grip shown in Figs. 1 and 2.

Referring to said drawings, A and B are the jaws of the grip, the latter or stationary jaw or member being depended from the car by hangers *d d*, which are rigidly fixed to the car-bottom, and the former or movable member being connected to the operating element therefor by the connecting-rod or gripping-bar *f*. The said hangers and the gripping-bar are connected to their respective dependent jaws at the central line of the latter, so that a gripping-space on each side of the hangers and gripping-bar is provided between the jaws. The upper jaw must obviously be provided, therefore, with centrally-situated openings arranged near the ends of said jaw and through which the hangers extend.

Each jaw is provided with dies *a c* upon its gripping-surface, said dies being grooved, as shown, and being detachably secured in position, so as to be renewable when worn. These dies, it will be noticed, do not extend the entire length of their respective jaws.

At each end of the upper jaw a centrally-situated opening is provided, each of said openings corresponding with a slot *u*, also provided in the lower jaw. The slot extends in a transverse direction, and in said slot and the corresponding opening in the upper jaw an ejector D of the usual pattern is arranged. There are therefore two of these ejectors, one at each end of the grip, and they are both simultaneously operated in a vertical direction by means of a cross-bar or band *n*, connected thereto by bolts arranged to project through said bands and the upper end of each ejector, which is provided with a longitudinal slot for permitting the vertical adjustment of said ejectors. The band is carried by lifts *m m*, which are connected to and operated by any suitable operating element carried on the car-platform.

At the corners of one of the jaws, preferably the upper one, I propose to provide downwardly-projecting lugs *w*. I place these lugs on the portion of the lower face of the jaw which, as above described, is left vacant by terminating each die short of the ends of the jaw. They extend downwardly considerably beneath the lower edge of the dies.

I have constructed a block *e*, (shown in Fig. 3,) from each end of which projects the downwardly-extending lugs *w*, and which consequently provides a pair of lugs for each end of the jaw. Said block is secured, by means of rivets, to the lower face of the jaw, and said jaw has a transverse cavity or depression, in which seats a suitable projection formed on the block, so that in this, the most desirable construction of my improvement, the block is prevented from any transverse movement due to lateral pull from the cable, such as occurs when passing around curves that extend away from the open face of the grip.

The operation of the device as shown and devoid of my improvement is similar to that of the usual cable-car grip. The addition of my improvement, however, as aforesaid, prevents the displacement of the cable from the grip when the latter is merely released sufficiently to permit the stopping of the car upon a curve which extends on the same side thereof as that of the open face of said grip. Of course when it is desired to throw out the cable from the grip, upon opening the jaws thereof to a greater degree than is ordinarily required for the purpose of merely permitting the stopping of the car, this operation may

be performed uninterruptedly so far as the lugs are concerned.

Having thus fully described my invention, what I claim, and desire to secure by Letters Patent of the United States, is—

1. The combination with one of the jaws of a cable-grip, of a block *e* secured substantially at each end of the gripping-surface of said jaw and provided with lugs *w* extending beyond and situated outside of said gripping-surface, said jaw being provided with a depression to receive the block, substantially as described.

2. The combination with one of the jaws of a cable-grip, of a block *e* riveted substantially at each end of the gripping-surface of said jaw and provided on its outer face with lugs *w* extending beyond and situated outside of said gripping-surface and on its opposite face with a projection or projections, said jaw being provided with a depression or depressions corresponding with and adapted to receive the projection or projections of said block, substantially as described.

3. The combination with the substantially similar jaws of a cable-grip, of grooved oppositely-arranged dies carried upon the opposing faces of said jaws and terminating short of the ends thereof, and a block *e* secured in the unoccupied space of the lower surface at each end of said upper jaw and provided with downwardly-extending lugs arranged outside of the gripping-surfaces of said dies and projecting beneath said gripping-surfaces, substantially as described.

4. In a cable-grip, the detachable guide-block *e* provided with suitable corner-shoulders as *h*, arranged to fit the transverse depressions in the ends of the jaw A so as to take up the lateral thrust or strain, and suitable bolts for holding the said blocks in place, substantially as described.

In testimony that I claim the foregoing improvement in cable-car grips, as above described, I have hereunto set my hand this 1st day of May, 1897.

THOMAS MILLEN.

Witnesses:
C. L. MALCOLM,
J. H. BELL.