United States Patent

Prete, Jr.

[15] **3,678,542**

[45] **July 25, 1972**

[54] CAM BUCKLE

[72] Inventor: **Ernest Prete, Jr.**, Woodland Hills, Calif.

[73] Assignee: **Ancra Corporation**, El Segundo, Calif.

[22] Filed: **June 17, 1970**

[21] Appl. No.: **47,050**

[52] **U.S. Cl.** **24/191**, 24/70, 24/170

[51] **Int. Cl.** **A44b 11/12**, A43c 11/00

[58] **Field of Search** 24/191, 78, 170

[56] **References Cited**

UNITED STATES PATENTS

2,653,365	9/1953	Elsner	24/170
3,013,317	12/1961	Weber	24/170
3,413,691	12/1968	Elsner	24/170 X
2,916,786	12/1959	Legat	24/170
672,793	4/1901	Mixer	24/78 UX
632,793	9/1899	Sell et al.	24/170
2,869,200	1/1959	Phillips et al.	24/78
3,177,545	4/1965	Svensson	24/170

Primary Examiner—Paul R. Gilliam

Attorney—Smyth, Roston & Pavitt

[57] **ABSTRACT**

A buckle for fastening belts or straps, such as those used in cargo handling, comprising a substantially U-shaped frame providing a seat for a removable pressure plate having a serrated surface across a large portion of the face thereof. A cam, having a similarly serrated face thereon is biased toward the face of the pressure plate by a spring acting between a cam lever and the frame, so as to hold a strap between the pressure plate and the cam face. The cam may be pivoted away from the pressure plate against the force of the spring by the cam lever which is pivoted on a pin mounted within the frame. The shank of the pin may be upset at one end thereof so as to produce a rivet which becomes firmly held within an aperture in the frame. The aperture is formed within a depression on one of the legs of the U-shaped frame which causes the cam lever to be offset from the leg a sufficient distance to preclude the leg from obstructing the pivotal motion of the lever. Alternatively, the pin may extend through opposite keyhole slots in the legs of the frame. With the smaller portions of the slots at the upper ends thereof, the biasing spring acting on the cam causes the cam to force the pin upwards into the slot to maintain it within the frame.

3 Claims, 6 Drawing Figures

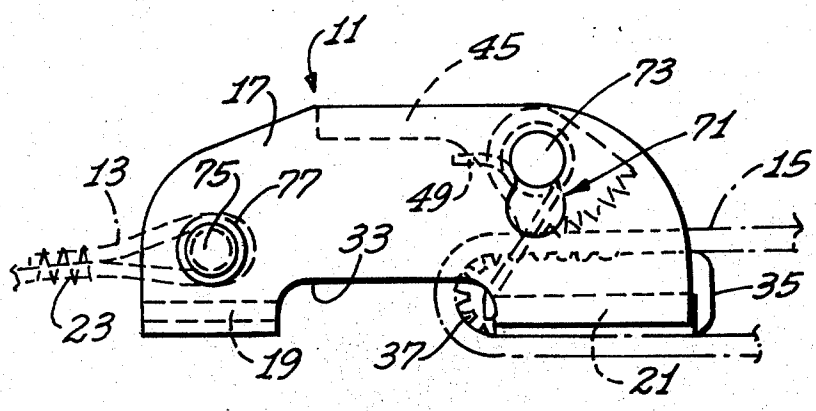

PATENTED JUL 25 1972

3,678,542

Fig. 1

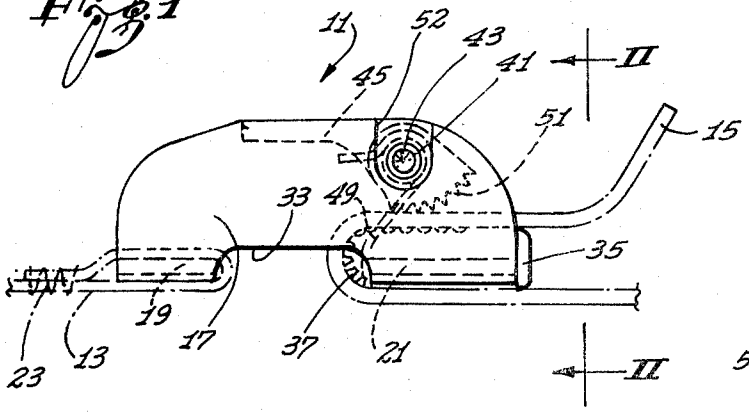

Fig. 2

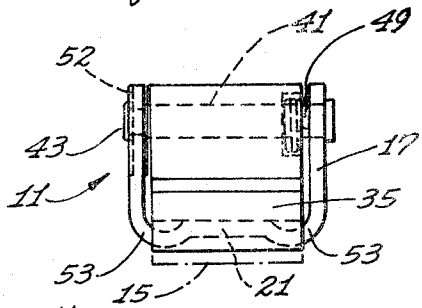

Fig. 3

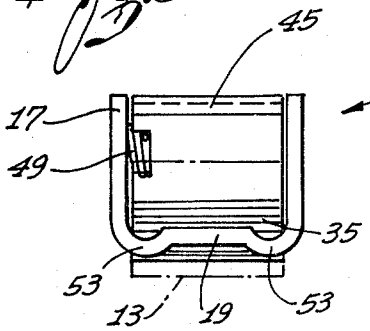

Fig. 6

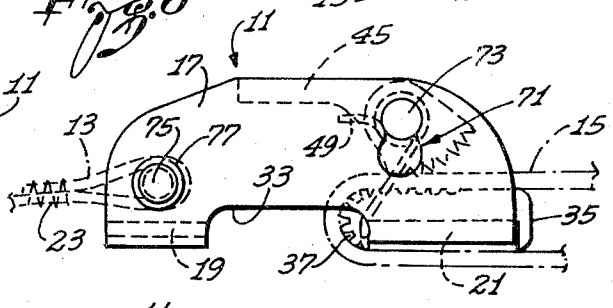

Fig. 4

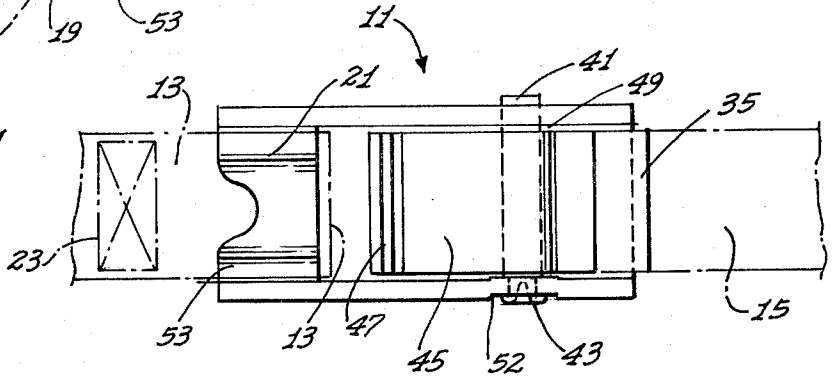

Fig. 5

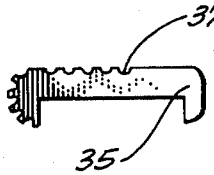

INVENTOR.
Ernest Prete, Jr.

By Smyth, Roston & Pavitt

ATTORNEYS

CAM BUCKLE

BACKGROUND OF THE INVENTION

This invention generally relates to a buckle by means of which the ends of a strap or belt may be connected to one another for suitable purposes, such as the securing of cargo. When articles, hereinafter referred to as "cargo" for the sake of simplicity and not limitation, are to be secured in place, it has become common practice to attach a belt or strap either about the cargo or to structural members in its proximity so as to prevent movement thereof. This is particularly important when the cargo is being transported in a vehicle.

In order to secure the ends of the belt to one another and to place the belt under sufficient tension to prohibit movement of the cargo, it has become common practice to provide a buckle to which one end of the belt is permanently fastened and through which the other end of the belt may be threaded and pulled until the desired amount of tension is present in the intermediate portion of the belt. Such a buckle has been shown in U. S. Pat. No. 2,998,626, issued Sept. 5, 1961 to Prete, Jr.

In designing such buckles, it is important to include the features of low cost, light weight, high strength, protection of the cargo from damage by the buckle, and adaptability to a large number of belt sizes. Many of the prior art buckles have embodied one or more of these features but no buckle is presently available in which they are all present in an optimum combination.

For example, in one prior-art buckle of this general type, the frame structure is formed from a pair of side plates which are held together by a plurality of pins, one of which forms the anchor to which one end of the belt is permanently attached. Additionally, a structural member over which the other end of the belt is passed is fixed between the plates to prevent them from moving toward one another. A cam having a serrated face is positioned so as to hold the threaded end of the belt in contact with the last mentioned structural member under the influence of a spring acting against the cam. The cam may be pivoted away from the structural member by a lever which is fixed to the side plates by a pivot pin. The plurality of pins all extend beyond the outer surfaces of the side plates and are peened thereagainst over washers.

These buckles do not present an optimum combination since the side plates tend to damage the items being stored because the lower edges thereof are relatively narrow and come into direct contact with the items. Consequently, any force exerted by the buckles on the cargo must be distributed over a relatively small area and a large amount of damage could be done with even a moderate pressure or belt tension force.

The ability of such buckles to hold belts in tension has been found to be lower than that which might be desired since the cam face, although it may be serrated, comes into contact with a smooth face on the structural member over which the belt is threaded.

In the prior art buckles, when the cam lever is pivoted about its pivot pin, it will tend to come into contact with the frame sides and its movement will be obstructed thereby unless one or more washer-like members are positioned over the pin and between the lever and at least one side of the frame.

In summary, therefore, such buckles are relatively expensive to manufacture since they require an excess amount of hardware, such as the above-mentioned washers on the pivot pin and the structural pins, do not provide sufficient belt tension holding strength in all applications, and may cause damage to the cargo.

SUMMARY OF THE INVENTION

A buckle formed according to the concepts of the present invention comprises a unitary, U-shaped frame which eliminates the necessity for structural pins to hold side plates in fixed relative positions. The channel or connecting portion of the frame provides a seat for a belt pressure plate which

may be formed either as an integral part of the frame or as a separate member which is mounted thereon. The channel also provides a broad surface or large area over which pressure forces may be distributed.

The pressure plate is provided with a serrated surface over a substantial portion thereof so that a cam, having a serrated face, will exert a pressure on a belt in such a position that the belt is held by opposed serrated surfaces.

The cam is biased toward the pressure plate by a coil spring mounted on a pivot pin to act between an integral cam lever, mounted on the pin and the frame. The pivot pin passes through a pair of coaxial apertures in opposed legs of the frame and one end thereof is upset in rivet-fashion so as to become firmly fixed within its adjacent aperture. The other end of the cam pivot pin will therefore not have to be fixed in any manner since it is thereby prevented from moving within its aperture.

A very slight indentation in the side of the frame about the aperture in which the pivot pin is riveted will cause the cam and its associated lever to pivot in an arc which passes adjacent to, but cannot be obstructed by, the side of the frame. In other words, this invention also embodies the use of an indentation to produce a permanent, frame-created offset of the lever so that a washer between the lever and the frame is no longer required.

As an alternative, coaxial keyhole slots may be formed in the opposite legs of the frame with the smaller portion of the slots extending upwardly. A pivot pin having reduced portions adjacent the ends thereof may be positioned within the keyhole slots. The above-described cam member is positioned on the pivot pin and a coil spring acts between the cam and the frame so as to bias the cam toward contact with the pressure plate. Thus, as the cam tends to be rotated by the spring, it acts against the pressure plate so as to force the pivot pin upwardly due to the tendency of the cam to rotate about its cam surface. This prevents the pivot pin from inadvertently being removed from the frame. Further, when a belt or strap is positioned between the cam and the pressure plate, the force exerted to hold the pivot pin in place is increased still further since the center of rotation of the cam, at its cam face, is thereby moved still closer to the upper end of the keyhole slot.

Intermediate the ends of the frame, the channel may be cut away to allow the end of the belt to be positioned between the pressure plate and the cam. At the opposite end of the frame, a second end of the belt may be passed over the channel, positioned over itself in overlapping fashion, and sewn in place along the overlap.

This latter feature reduces the pressure exerted by the buckle on the cargo which is being secured in place since, if properly positioned, the buckle frame will never enter into contact with the cargo but instead, will be separated therefrom by the belt. In other words, a relatively soft material is positioned between the cargo and the frame so as to both distribute the forces over a large area and to absorb some of the forces through compression.

Alternatively, a pin may be mounted in any suitable fashion such as that taught in the prior art or in the same manner in which the first described pivot pin is mounted. This pin, of course, is an alternate method of permanently attaching a second end of the belt to the frame.

If desired, broad longitudinal channels or ridges may be formed in the frame channel or central section so as to increase the rigidity of the frame without adding structure or weight to it.

The buckle is rigid and is precluded from damaging cargo due to its U-shape, is less expensive due to its unitary manufacture, the reduction of the number of parts, and the novel system by which the parts are fixed therein, and is versatile in that a wide variety of belt sizes may by utilized within a single buckle.

Other advantages, objects, modes, and embodiments of this invention will become obvious to those skilled in the art through perusal of the Detailed Description and accompany-

ing drawing which illustrate what is presently considered to be a preferred embodiment of the best mode contemplated for utilizing the novel principles set forth in the claims.

BRIEF DESCRIPTION OF THE DRAWING

FIG. 1 is a side elevation of a buckle formed in accordance with the present invention;

FIG. 2 is an end view of the buckle shown in FIG. 1, taken along a line II—II thereof;

FIG. 3 is an end view of the other end of the buckle shown in FIG. 1;

FIG. 4 is a top plan view of the buckle formed according to the present invention;

FIG. 5 is a side view of a pressure plate formed according to the present invention; and

FIG. 6 is a side elevation of a buckle formed in accordance with an alternate embodiment of the invention.

DETAILED DESCRIPTION

Referring now to the drawing in greater detail, there is shown a buckle generally designated 11 to which a first end 13 of a belt is permanently attached and through which a second end 15 of the same or a different belt may be threaded for cargo hold-down purposes, as previously described. The frame generally comprises a unitary, U-shaped member 17 having opposed upstanding legs and a first and second central or channel portion 19 and 21.

The first end 13 of the belt is permanently attached to the buckle by means of the second channel portion 19 over which the belt is passed so that it may be sewn to itself, such as by stitching 23. A pin can be fixed to the upstanding legs of the frame in any suitable manner, such as by spring clips or by peening the ends thereof over washers. However, the pin can also be firmly attached to the frame by upsetting an end thereof in a manner similar to which a rivet might be upset, causing the end to expand within an aperture in the adjacent frame leg. In this manner, the pin is firmly held within the frame against axial movement thereof by means of the upset end.

A notch 33 is formed in the central portion of the channel 19 so that belt end 13 may extend around channel portion 21 and the end 15 of the belt may be threaded into the buckle in the manner illustrated in phantom in FIG. 1. As shown in both FIGS. 1 and 5, the forward portion of the channel 19 provides a seat for a pressure plate 35 having serrations or grooves 37 over a large portion of the face thereof and against which the belt is seated. Of course, the pressure plate could be formed as an integral portion of the frame, if desired, but it has been shown as a separate piece here due to the fact that the slight degree of freedom of movement it has within the frame allows it to be adjusted therein by the belt so that the belt is in contact with nearly all of the serrations 37 regardless of the specific angle which it may assume as it passes through the buckle. Further, since the plate has some freedom of movement, it compensates for mis-match which may occur between the parts as a result of manufacturing tolerances. A pair of legs on the plate in contact with the first channel portion 19 prevent inadvertent removal thereof from the buckle. Full depression of the cam lever will allow installation or removal of the plate unless a belt is threaded between the plate and the cam, in which case, the plate is effectively locked into position.

A pin 41 is passed through coaxial apertures in the upstanding legs of the frame and an end 43 thereof is upset in the same manner in which a rivet would be upset, causing end 43 to expand within its associated aperture so that the pivot pin 41 is firmly held in the frame against axial movement. It is also prevented from bending or moving in a direction parallel to the force exerted by the belt when it is in tension since it extends through a coaxial aperture on the opposite frame leg.

A lever 45 is pivoted on the pin 41 so that when an operator exerts pressure against a portion 47 thereof, the lever will pivot in the counterclockwise direction (as viewed in FIG. 1) against the force of a spring 49 acting between the forward channel portion 19 and the lever. Spring 49 also serves to prevent the adjacent portion of the lever from contacting the adjacent frame leg when pivoted about pin 41.

A serrated cam face 51 on the forward end of the lever 45 is forced by the spring 49 toward the serrated face of the pressure plate 35 so that when the end 15 of the belt is passed through the buckle, it is firmly held between the serrated cam face and the serrations 37 on the pressure plate. Tests have shown that the provision of opposed serrations on the cam and pressure plate increase the buckle's ability to withstand belt tension pulling force by a very significant factor.

When it is desired to remove the end 15 from the buckle, the lever may be pivoted against the force of the spring 49 by the operator, causing the serrated cam face 51 to pivot away from contact with the belt 15 allowing it to be drawn from between the cam face and the pressure plate.

Face 51 on the cam is manufactured to be of an increasing radius (see FIG. 1) so that a belt of nearly any thickness may be held between the cam and the pressure plate. Thus, the thinner the belt is, the further cam 51 will rotate under the influence of spring 49. Due to this feature, a belt cannot be pulled out of the buckle unless lever 45 is first depressed since the pulling force will tend to pull the cam face closer to the pressure plate and exert a larger gripping force on the belt.

It is normally desirable to cause the pressure plate and the cam face to be as wide as possible so that a maximum area of contact between their serrations and the belt is effected. It is also desirable that the cam lever be as wide as possible so as to prevent discomfort to the operator when he depresses it to release the belt. In other words, it is desirable to provide the cam and its associated lever to be only slightly smaller than the distance between the inner surfaces of the upstanding frame legs. However, in order to prevent the cam lever from coming into contact with the legs of the frame, some means must be provided to ensure clearance therebetween. As stated previously, the spring 49 tends to prevent the lever from contacting one side of the frame, thereby ensuring clearance on the side upon which the spring is positioned.

In order to prevent the opposite side of the lever from entering into a binding or obstructive contact with the other leg of the frame, a small indentation 52 may be formed therein so as to produce an offset in that leg. The indentation forces a sufficient amount of metal on the inside of the frame leg to be forced toward the cam lever so that the long side of the cam lever is prevented from entering into contact with the leg. In other words, the deformation 52 about the pin 41 will produce a sufficient offset of the frame in that area to provide satisfactory clearance between the cam lever and the frame leg. Thus, there is no necessity to increase the cost of the buckle by installing a washer between the lever and the frame leg.

The central or channel portion 19 of the frame may extend entirely across the frame on a single plane or, if desired, may be deformed so as to provide ridges or channels 53, in either the longitudinal or transverse direction, which will further serve to strengthen the frame and ensure its rigidity.

Referring now to FIG. 6, an alternate embodiment of a buckle formed in accordance with the principles of the present invention has been shown. In many respects, the buckle of the alternate embodiment is identical to the embodiment previously described and, where possible, identical description labels have been utilized and no further description of those parts is necessary.

As shown in FIG. 6, a keyhole slot, generally indicated at 71, is formed in each of the upstanding legs of the U-shaped member 17 so as to be in coaxial relationship with one another. A pin 73, upon which the cam 45 is pivotally mounted, is passed through the enlarged portions of the keyhole 71 until portions of the pin having reduced radii are aligned with the upstanding legs. The spring 49, mounted on the pin 73, acts against the cam lever 45 and the second channel portion 21 so as to urge the cam into clockwise rotation

about a moving center of rotation on its cam face. This causes the pin **73** to be forced upwardly into the reduced portion of the keyhole slots **71** so that the portion of the pin **73** having reduced radii enter into contact with the walls of the keyhole slot so as to prevent axial movement of the pin. Reference to the figure will also indicate that when an end **15** of a belt is positioned between the pressure plate **35** and the cam face, the spring biasing of the cam will exert even greater force on the pin **73** due to the effective alteration of the movable center of rotation of the cam.

On the opposite end of the frame, a pin **75** may, if desired, be passed through coaxial apertures in the upstanding legs so that the end **13** of the belt may be passed thereover so that it may be removed from the buckle if desired. In order to accomplish this, the pin **75** may be mounted in any suitable fashion such as by means of a snap ring **77**, a washer as taught by the prior art, or, if desired, by upsetting one end thereof in a manner similar to that previously described with reference to pin **41** in the discussion of the first embodiment.

Thus, the applicant has provided an embodiment of a new and improved concept in the buckle art which yields a true advancement in that art due to the provision of the desirable features previously enumerated. Many modification, alterations, and alternate embodiments of the invention, without exceeding the scope of the following claims, will be obvious to those skilled in the art; wherefore what is claimed as the invention is:

I claim:

1. A buckle for removably holding a strap end including
a channel member having
a central portion extending along the length of said channel member and defining
a pressure plate receiving means formed adjacent one end of said channel member,
a pivot means mounted on said channel member in a fixed position relative to said pressure plate receiving means,
a pivotable member mounted on said pivot means and including
a cam face, in eccentric relationship to the axis of said pivotable member, at one end of said pivotable member and
a lever means at the opposite end of said pivotable member, said pivotable member being freely rotatable about said pivot means, in a first direction,
a pressure plate loosely seated and freely floating upon said pressure plate receiving means including
means on said pressure plate for removably seating and retaining said pressure plate on said pressure plate receiving means, and
means for biasing said pivotable member about said pivot means in said first direction to force said cam face against said pressure plate, thereby holding said pressure plate in a seated position on said pressure plate receiving means and preventing further rotation of said pivotable member in said first direction.

2. The buckle of claim **1** wherein
said channel member includes
a pair of upstanding side walls at the sides of said central portion, at least one of which has
an inwardly directed deformation about the location in which said pivot means is mounted therein, whereby said pivotable member is prevented from binding against said side walls during rotation about the axis of said pivot means.

3. A buckle for connecting two strap ends comprising
a first member comprising
a frame having
a first end,
a second end,
a central channel portion extending between said first and second ends, but having
an open interval intermediate said first and second ends and
a pressure plate receiving section extending from said one end to said open interval, and
an opposed pair of upstanding legs integral with said central channel portion,
a second member comprising
a pivot means mounted to extend between said pair of upstanding legs above said central channel,
a third member comprising
a lever means pivotally mounted on said pivot means and having
a cam face thereon in eccentric relationship to the axis of said pivot means and
a pressure area thereon upon which an operator may exert a force to rotate said lever about said pivot means, said lever means being freely rotatable about said pivot means as limited only by contact thereof with the extremities of said pressure plate receiving section
a fourth member comprising
a pressure plate removably insertable over said pressure plate receiving section and including
means on said pressure plate for allowing said pressure plate to be freely movable in all directions, within predetermined limits, relative to said pressure plate receiving section, as well as to be removable therefrom while retaining said pressure plate in a seated relationship on said pressure plate receiving means, and
a fifth member comprising
means for biasing said lever means about said pivot means to force said cam face against said pressure plate, thereby seating said pressure plate against said pressure plate receiving means.

* * * * *