A. HARDONCOURT, JR.

WALL CONSTRUCTION AND TILE OR BLOCK THEREFOR.

APPLICATION FILED NOV. 29, 1912.

1,068,338.

Patented July 22, 1913.

3 SHEETS—SHEET 1.

Fig. 1.

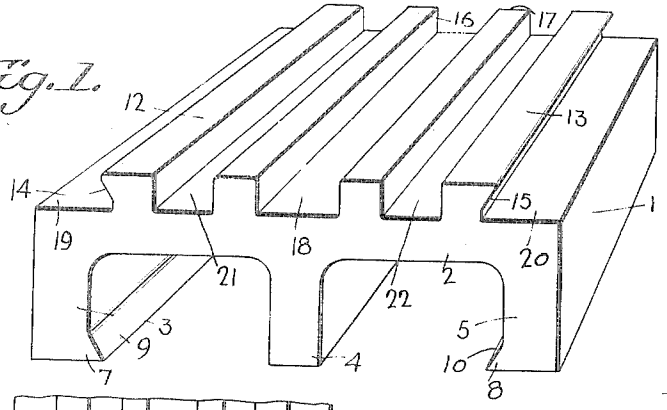


Fig. 2.

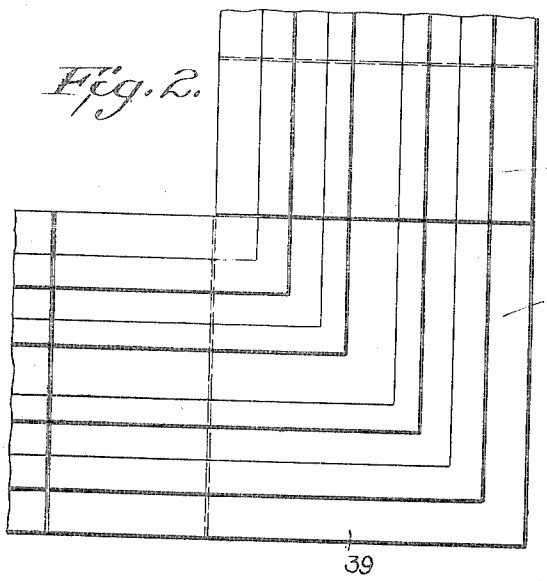


Fig. 4.

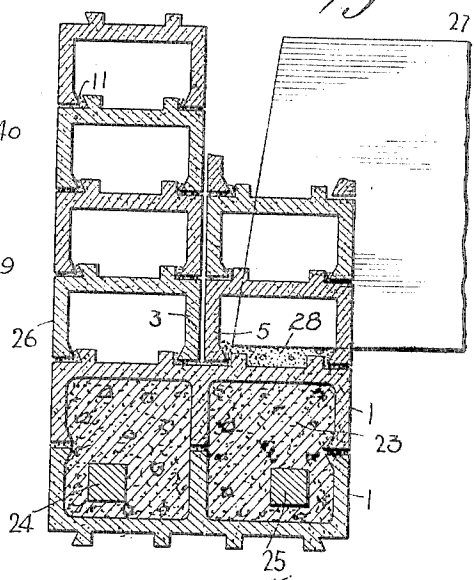


Fig. 3.

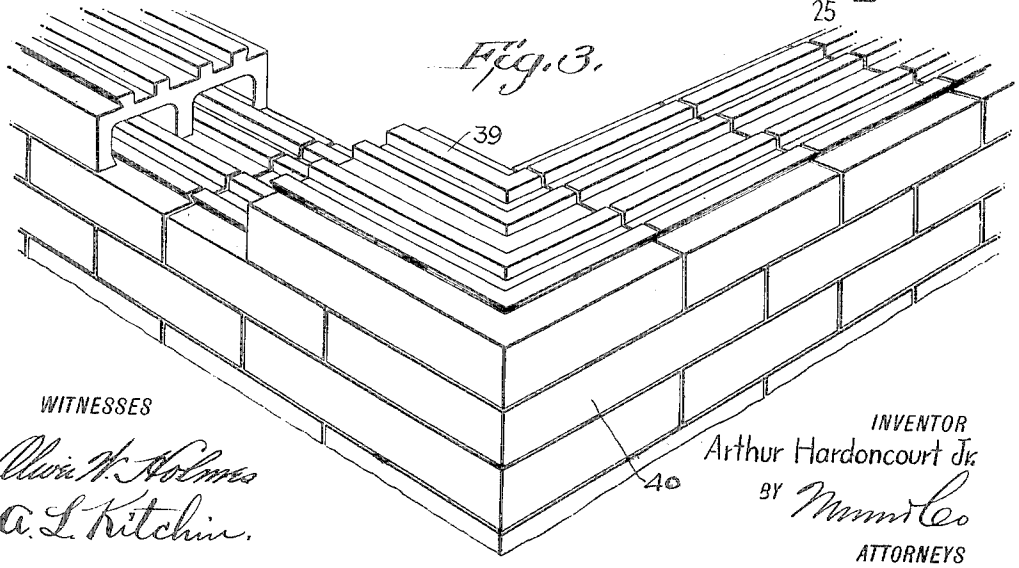


WITNESSES

Alvin W. Holmes

A. L. Kitchin.

INVENTOR

Arthur Hardoncourt Jr.

BY Munn & Co

ATTORNEYS

A. HARDONCOURT, JR.

WALL CONSTRUCTION AND TILE OR BLOCK THEREFOR.

APPLICATION FILED NOV. 29, 1912.

1,068,338.

Patented July 22, 1913.

3 SHEETS—SHEET 2.

Fig. 5.

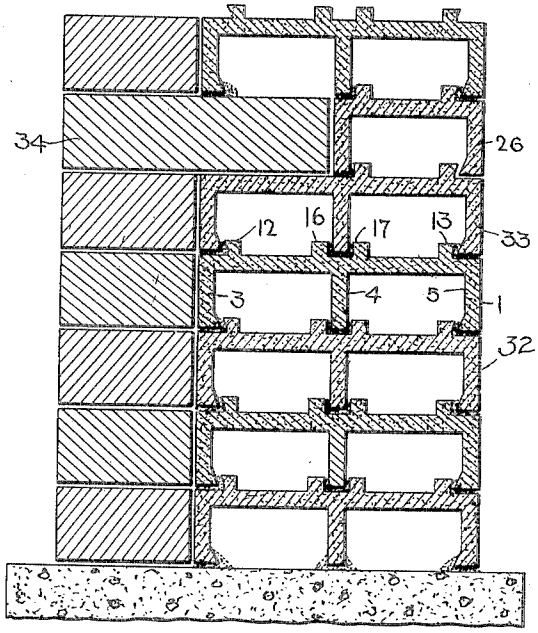


Fig. 6.

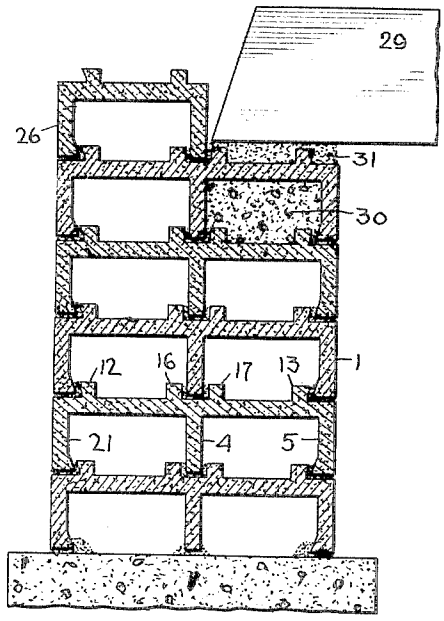


Fig. 7.

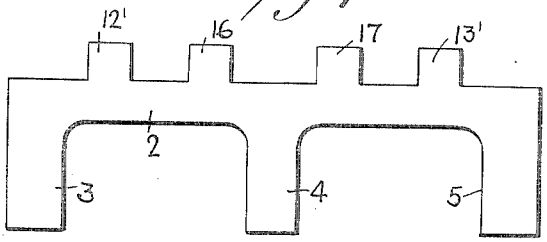


Fig. 9.

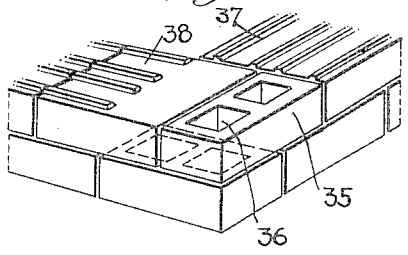


Fig. 8.

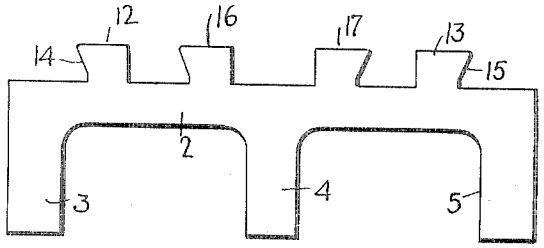


WITNESSES

Alvin F. Holmes

A. L. Kitchin.

INVENTOR

Arthur Hardoncourt Jr.

BY Munn & Co

ATTORNEYS

A. HARDONCOURT, JR.

WALL CONSTRUCTION AND TILE OR BLOCK THEREFOR.

APPLICATION FILED NOV. 29, 1912.

**1,068,338.**

Patented July 22, 1913.

3 SHEETS—SHEET 3.

Fig. 10.

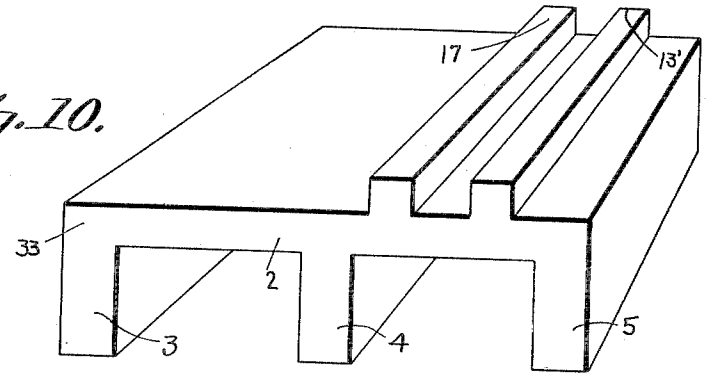


Fig. 11.

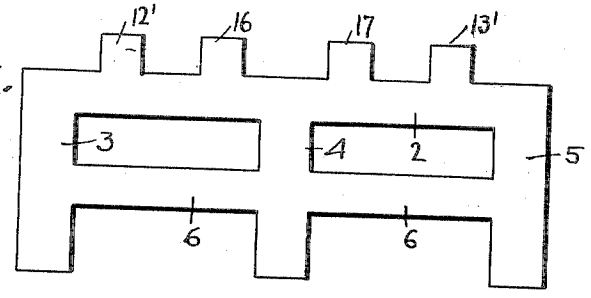


Fig. 12.

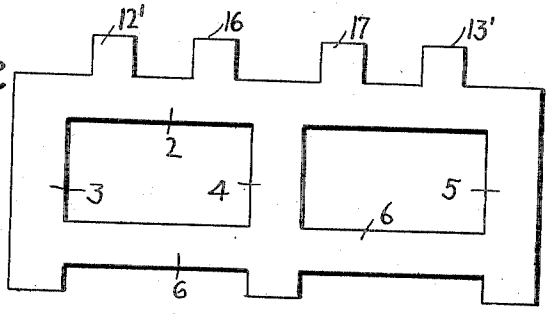


WITNESSES

Alvin H. Holmes

A. L. Ritchie,

INVENTOR

Arthur Hardoncourt Jr.

BY Munn & Co.

ATTORNEYS

# UNITED STATES PATENT OFFICE.

ARTHUR HARDONCOURT, JR., OF NEW YORK, N. Y.

## WALL CONSTRUCTION AND TILE OR BLOCK THEREFOR.

1,068,338. Specification of Letters Patent. Patented July 22, 1913.

Application filed November 29, 1912. Serial No. 734,069.

*To all whom it may concern:*

Be it known that I, ARTHUR HARDONCOURT, Jr., a subject of the Emperor of Austria-Hungary, and a resident of the city of New York, borough of Brooklyn, in the county of Kings and State of New York, have invented a new and Improved Wall Construction and Tile or Block Therefor, of which the following is a full, clear, and exact description.

This invention relates to walls and blocks or tiles for constructing the same, and has for an object to provide an improved construction of wall whereby the wall may be bonded in the course and the facing brick properly interlocked with the tiles or blocks forming the wall.

A further object of the invention is to provide a wall structure formed with a plurality of independent or segregated air chambers extending in a horizontal direction, the various blocks forming the wall being formed with overlapping projections so as to prevent moisture from passing from one edge of the block to the other transversely of the wall.

A still further object of the invention is to provide a block formed with a plurality of depending webs on one side of the body and a plurality of raised portions on the opposite side of the body arranged adjacent the raised portions or mortar-receiving spaces or surfaces adapted to receive the mortar on which the webs of the next succeeding blocks are placed when the blocks are placed in the wall.

A still further object of the invention is to provide a block formed with moisture checking means on one side, the same being arranged with certain overhanging portions for permitting the block to be dressed and moved easily.

In carrying out the objects of the invention, a block is formed with a body having webs extending from one side and a plurality of projections extending from the opposite side, the projections acting as moisture retarding means. The blocks may have the body portion formed solid and the webs extending from one side thereof and the projections extending from the opposite side, or the body portion may be formed with a void or opening therethrough. The void or opening may be of any size whereby the body portion is formed of an upper and lower transverse web connecting the depending webs or feet. In constructing the block, the projections which are designed to assist in preventing moisture from moving from one side of the block to the other, are made comparatively narrow so that the same may be easily knocked off when necessary to turn a corner, or to put in a bonding brick at any particular place. Also in forming the block, a bonding block is especially provided which has part of the moisture preventing projections removed so as to receive the bonding brick without any extra work. These bricks of whatever special detail construction, are arranged in a similar manner in the wall so that the voids or openings will extend horizontally instead of vertically, as in blocks commonly used. Also the blocks are preferably made of the size of an ordinary brick, or a multiple of the size of an ordinary brick, in order to be easily used therewith and allow a facing or ordinary brick to be used and bonded with the blocks without changing the blocks and without in any way interfering with their strength. When making a tile the size of two or more ordinary bricks, the same is made slightly larger than the multiple of the bricks so as to compensate for the mortar used in building several brick. When forming a wall at a corner, a special corner block is used, which is formed right and left so as to cause a proper interlocking, though these bricks are being constructed from the regular block having the depending webs on one side and the projections on the opposite side. In constructing these corner blocks, the webs and projections are caused to extend at right angles or any other angle, as desired, so that there will be an overlapping and tying action of the blocks.

A practical embodiment of the invention is represented in the accompanying drawings forming a part of this specification, in which similar characters of reference indicate corresponding parts in all the views.

Figure 1 is a perspective view of a block embodying the invention; Fig. 2 is a top plan view of the corner of a wall disclosing blocks embodying the invention, including a corner block; Fig. 3 is a perspective view of a wall disclosing two forms of blocks, namely, the corner block and the form of block shown in Fig. 1; Fig. 4 is a section through a wall disclosing certain features of the in-

vention; Fig. 5 is a section through a wall disclosing a slightly modified form of the invention, including a bonding block; Fig. 6 is a transverse section through a wall embodying certain features of the invention; Fig. 7 is an end view of a slightly modified form of block to that shown in Fig. 1; Fig. 8 is an end view of a further slightly modified form of block to that shown in Fig. 1; Fig. 9 is a perspective view of a corner showing the use of blocks formed according to the present invention in connection with an ordinary block formed with the voids or openings extending vertically; Fig. 10 is a perspective view of a bonding block; Fig. 11 is a slightly modified form of the invention to that shown in Fig. 7; and Fig. 12 is a further slightly modified form of the invention to that shown in Fig. 7.

In forming a block embodying the invention, the same is primarily intended to be constructed of the size of an ordinary brick in common use, but it will be evident that the block may be made of any desired size. However, when making a block of the large size, cross webs must be provided for breaking the depending webs or feet. Referring to the drawings in detail, it will be observed that the block 1 in Fig. 1 is formed with a body portion 2, and webs 3, 4, and 5. It will be evident that any number of webs depending from body 2 may be provided, and that the block may be formed of any width, or any length, as well as of any height, though as above stated the height of the webs 3, 4, and 5 should be limited to the size of an ordinary brick unless horizontal webs 6 are provided, as shown in Figs. 11 and 12. In these figures the block is designed to be of the same size as that shown in Fig. 1, though this structure would admit of forming the depending webs 3, 4, and 5 considerably higher so as to make the block thicker. In block 1 the depending webs or feet 3 and 5 are preferably provided with projections or enlargements 7 and 8 for providing enlarged bearing bases which have beveled upper surfaces 9 and 10 for receiving the mortar 11 (Fig. 4) which will cause a binding action between the extensions 7 and 8 and the projections 12 and 13 of the next preceding block. It will be observed from Fig. 1 that the projections 12 and 13 are formed with undercut portions 14 and 15 which co-act with the beveled surfaces 9 and 10 and with the mortar 11 for causing the interlocking action just described. In addition, these undercut portions permit the operator to grasp the block more easily for locating the block properly in the wall. In connection with these undercut portions it will be observed that in Fig. 8 not only are the extensions 12 and 13 provided with undercut portions, but the extensions 16 and 17 are also provided with undercut portions so that there will be no difficulty or trouble in grasping the projections so as to manipulate the block as desired. The projections 16 and 17 shown in Fig. 1, are preferably rectangular, though if desired they could be undercut as shown in Fig. 8. Arranged between the projections 16 and 17 is a mortar-receiving surface or seat 18, and arranged adjacent the projections 12 and 13 are mortar-receiving surfaces or seats 19 and 20. When these mortar-receiving surfaces or seats have been supplied with mortar, the next succeeding block is placed thereon and as the mortar is squeezed somewhat off these surfaces, the same will pass up and form a bonding or tying member between the undercut portions 14 and 15, and the projections 7 and 8 of the next succeeding block, as well as forming a good foundation or base for the block to rest upon. The mortar receiving surface 18 may be made of any desired width so as to accommodate a single web 4, as shown in Fig. 6, or may be made sufficiently wide for accommodating the webs 3 and 5 of the double web structure, shown in Fig. 4. It will be observed that when building a wall as shown in Fig. 4, or as shown in Figs. 5 and 6, moisture cannot pass from one face of the wall to the other, as the continuity of the layer of mortar is broken and it is therefore difficult and usually impossible for moisture to pass over the projections 12, 16, 17, and 13, and also over the dry surfaces 21 and 22 arranged between the projections 12 and 16, and 17 and 13.

It will be observed that the wall when completed presents vertical rows of air spaces arranged side by side and with continuous ribbons of mortar at the side joints and the intermediate joints of the various tiles or blocks. The ribbons of mortar are arranged to extend longitudinally of the wall, and uninterrupted from one end of the wall to the other, but spaced apart transversely. This is specially advantageous, as the same results in the production of a wall in which no moisture can enter the outer air spaces except through the outer longitudinally arranged ribbons of mortar. Should any moisture enter through the outer longitudinal ribbon of mortar it cannot enter the second air space without passing through the intermediate mortar strip, and should it by any possibility enter the second air space from the outer air space, the moisture could not pass to the inner surface of the wall except through the inner ribbon of mortar, so that there is provided an outer air space, an inner air space, an outer continuous mortar ribbon, an inner continuous mortar ribbon, and an intermediate mortar ribbon, together with inner and outer air spaces, all coöperating to positively exclude moisture from the inner face of the wall or wall structure.

When it is desired to build the wall structure shown in Fig. 4, a pair of blocks 1 are arranged so that the webs will face each other, and then the openings between the webs are filled with a concrete mixture 23 and if desired, with reinforcing bars 24 and 25. A plurality of single blocks 26 having only two webs are arranged on block 1 until the joist 27 has been passed, or rather until the wall has been built up to a position above the joist 27. In order to fill in between the various joists 27, ordinary brick may be used, or the blocks 26 may be broken to the proper length for fitting in between the joists. In addition to the mortar 23 being placed as just described, a layer of mortar 28 is also preferably provided so that the weight of the joists 27 may be more easily distributed over the block 1 and associated parts.

When it is desired to place a joist 29 at a considerable height above the foundation, or at any desired point of the wall, the wall structure is arranged as shown in Fig. 6, wherein the blocks 1 are arranged in the usual manner and the block immediately below the joist 29 is filled with a concrete mixture 30, and a layer of concrete 31 is provided immediately below the joist 29. The joist 29 is designed to extend over through substantially the center of the block and one of the blocks 26 having only two depending webs, is used for building the wall opposite the joist 29. It will be evident that the joist 29, as well as concrete 30, could be caused to rest directly on the blocks 1, but the use of the mortar is sometimes desirable as the same distributes the strain to a greater or less extent.

Referring more in detail to Fig. 5, it will be seen that the wall is constructed with a facing 32 of ordinary blocks 1, which are provided at one of the courses with a block 33, shown more in detail in Fig. 10, which block is formed with only the projections 17 and 13′, while the projections 12′ and 16 have been removed. The removal of these projections was made while the block was still green, preferably during the operation of molding or forming the block, so that when the block was burning the same was in a complete condition, as shown in Fig. 10. These blocks are known as the bonding blocks, as the same will accommodate the bonding brick 34 without the operator being compelled to knock off some of the projections for allowing the use of the bonding brick. It will be evident that this bonding brick could be used in any course, so that any desired number of headers or bonding bricks could be used without departing from the spirit of the invention. Also it will be evident that the block shown in Fig. 1 could be used provided the operator should strike off, with his hammer or otherwise, two of the rows of projections so as to permit the proper setting of the header or bonding brick 34.

Under various circumstances it may be desired to slightly change the block shown in Fig. 1, or Fig. 7, so as to brace the depending webs 3, 4, and 5, or to lengthen these webs so as to make a thicker block. In either of these cases the resulting block will be substantially as shown in Figs. 11 and 12, where horizontal blocks are provided that thoroughly brace the webs intermediate their width or near the end, as desired. However, it is necessary to leave a sufficient projection below the web 6 for forming feet in order that these projections or feet may fit into the mortar receiving spaces on the opposite side of the next succeeding block.

When building a corner of the wall with the block shown in Fig. 1, or any of the other forms of blocks except the special corner block shown in Figs. 2 and 3, an ordinary block 35 having vertical voids or openings 36 is used as a tying block and to give a proper appearance to the corner. It will be observed that the block 37 in this corner is overlapped on the end by the block 38. In order that the next succeeding block to be placed on block 37 may be properly positioned so as to overlap part of block 38, part of block 38 and part of the projections 12, 13, 16 and 17 of block 38 are removed. The removal of part of these projections permits the proper positioning of the next succeeding block 35.

In addition to forming the corner as shown in Fig. 9, means are provided for forming a better fitting corner by the use of a special block, as shown in Figs. 2 and 3. Referring more in detail to these figures, it will be seen that the corner block 39 is made to permit the folding of a corner without necessitating the knocking off of any of the moisture preventing projections. It will be evident however, that the block 39 must be made for instance, as a right and the next preceding block 40 must be made as a left. As clearly shown in Figs. 2 and 3, the projections 12, 13, 16, and 17 are caused to turn at right angles or at any other desired angle, according to the angle at which the walls are built, but that the webs at the opposite side are designed to turn in the same manner. These blocks are preferably formed while green by taking two blocks and cutting off in a diagonal direction two ends thereof and substituting the severed end of one block for the severed end of the other block, whereby the turned construction is produced, after which the block is burned in a kiln in the usual manner.

Having thus described my invention I claim as new and desire to secure by Letters Patent:—

1. In a wall of the class described, the

combination with a building block formed with a plurality of spaced depending webs, a plurality of mortar receiving seats positioned on the opposite side of each of the bricks or tiles to said webs, and a pair of projections between the mortar receiving seats, a header receiving channel tile or brick formed with depending webs adapted to be in line with the depending webs of said first mentioned brick or tile, a body with a substantially smooth upper surface, a strip or layer of mortar arranged beneath the bearing surface of each of said depending webs and the next succeeding brick or tile, a facing layer of standard brick, and a header, engaging said header receiving channel brick or tile and said facing layer of standard brick, for tying the facing layer of standard brick and the superimposed channel bricks or tiles together.

2. In a wall construction of the class described, the combination of a plurality of superimposed channel bricks or tiles formed with depending webs on one side and spaced projections on the other side, mortar receiving surfaces being arranged between some of said spaced projections, a ribbon or layer of mortar arranged between each of said webs and the next adjacent block, and a filling arranged at the floor line of said wall, said filling interlocking with some of said projections for providing a rigid foundation for the joist.

3. A block of the class described, comprising a top plate or body, a plurality of spaced longitudinally depending webs, each of said webs being formed with an enlarged bearing base, said enlarged bearing bases extending for the full length of the webs, and a pair of projections arranged on the opposite sides of said top plate or body to said webs and opposite the space between said webs, said projections being spaced apart whereby mortar seats are provided on said body opposite each of said webs, and means are provided for preventing the spreading of mortar beyond the mortar seats.

4. A block of the class described, comprising a top plate or body formed with a plurality of depending webs having longitudinally arranged enlarged bearing bases, said longitudinally arranged enlarged bearing bases producing an overhanging surface, said webs being of such a number as to produce a plurality of spaced channels, a pair of raised portions or projections arranged on said top plate or body on the side opposite to said webs and in line with said channels, and a longitudinally arranged mortar seat on said top plate or body opposite each of said webs, some of said raised portions or projections having a longitudinally arranged undercut facing a mortar seat whereby mortar placed on said mortar seats will engage said undercuts and said overhanging surfaces on said enlarged bearing bases for locking the webs of one block to the raised portions of the next succeeding block when the blocks are stacked.

5. In a block of the class described, a top or body plate provided on its under face with depending side webs and an intermediate web, and on its upper face with a plurality of relatively thin continuous longitudinal projections spaced apart from the side edges of the top plate and from each other, said projections providing continuous longitudinally extending mortar seats, directly above each web.

6. A block of the class described, comprising a top or body plate formed with a plurality of depending webs arranged to define a plurality of continuous channels on one side of said body, and a plurality of continuous longitudinal parallel spaced projections arranged on the opposite side of said body to said webs to provide continuous transversely spaced mortar seats, directly above each web, said projections being relatively thin whereby they may when desired be readily broken from said body.

7. A block of the class described, comprising a top or body plate formed with a plurality of depending webs on one side of said body, a plurality of tying members for bracing the depending webs, and a plurality of continuous longitudinal parallel spaced projections arranged on the opposite side of said body to said webs to provide continuous transversely spaced mortar seats directly opposite each web, said projections being relatively thin, whereby they may when desired be readily broken from said body.

8. In a wall structure, a plurality of blocks arranged end to end, each of said blocks comprising a top or body plate formed with a plurality of depending webs arranged to define a plurality of continuous channels on one side of said body, and a plurality of continuous longitudinal parallel spaced projections arranged on the opposite side of said body to said webs to provide continuous transversely spaced mortar seats directly above each web, said projections being relatively thin whereby they may if desired be readily broken from said body, the arrangement of said blocks end to end causing the depending webs and the projections to register end to end in order that transversely spaced mortar seats may be arranged to extend from one end of the wall to the other, and mortar arranged on each of said mortar seats for providing a mortar bed for all of said depending webs.

9. In a wall construction of the class described, a plurality of superimposed blocks formed with depending webs having enlarged feet and raised portions on the opposite side to said webs opposite the space between the said webs, a layer of mortar on

each side of each of said raised portions, engaging the enlarged portion of said webs, the enlarged portion of said webs distributing the strain to said mortar, a facing layer, and a binder for connecting the facing layer and the blocks, said binder being of such a size as to allow bonding at any course.

In testimony whereof I have signed my name to this specification in the presence of two subscribing witnesses.

ARTHUR HARDONCOURT, Jr.

Witnesses:

A. L. Kitchin,

Philip D. Rollhaus.