(No Model.)

A. J. BEATON.

FLOOR SLEEVE AND CEILING PLATE.

No. 590,717. Patented Sept. 28, 1897.

Fig. 1.

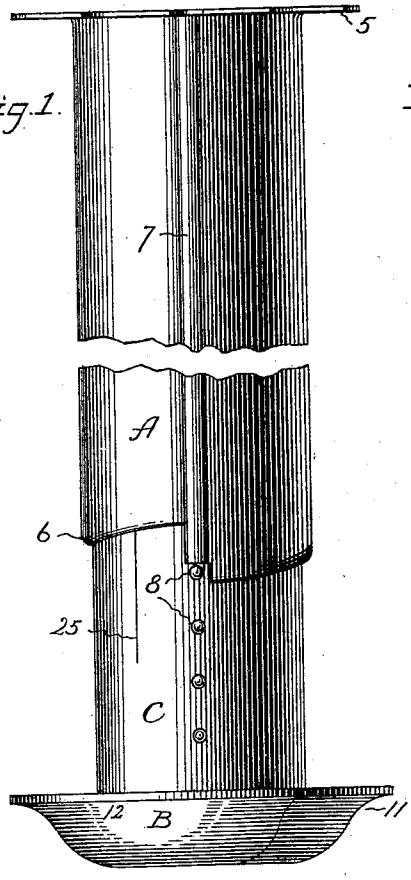

Fig. 2.

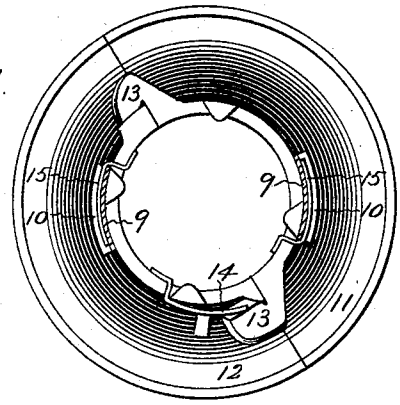

Fig. 3.

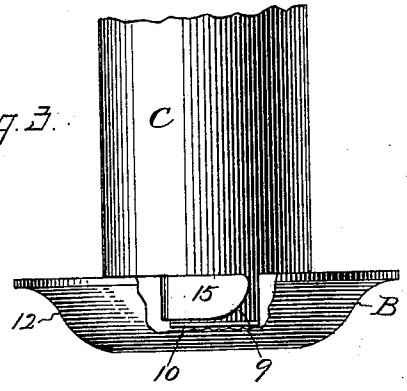

Fig. 4.

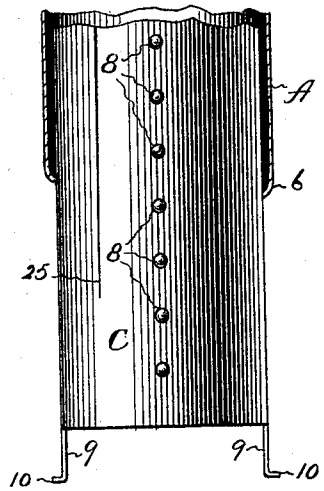

Witnesses
A. W. Stiper
P. J. Egan

Inventor
Allan J. Beaton.
By James Shepard.
Atty

THE NORRIS PETERS CO., PHOTO-LITHO., WASHINGTON, D. C.

UNITED STATES PATENT OFFICE.

ALLAN J. BEATON, OF SOUTHINGTON, CONNECTICUT, ASSIGNOR TO THE BEATON & BRADLEY COMPANY, OF SAME PLACE.

FLOOR-SLEEVE AND CEILING-PLATE.

SPECIFICATION forming part of Letters Patent No. 590,717, dated September 28, 1897.

Application filed May 15, 1896. Serial No. 591,631. (No model.)

To all whom it may concern:

Be it known that I, ALLAN J. BEATON, a citizen of the United States, residing at Southington, in the county of Hartford and State of Connecticut, have invented certain new and useful Improvements in Floor-Sleeves and Ceiling-Plates, of which the following is a specification.

My invention relates to improvements in floor-sleeves and ceiling-plates; and the objects of my improvement are simplicity and economy in construction and general efficiency and convenience in use.

In the accompanying drawings, Figure 1 is a side elevation of my floor-sleeve and attached ceiling-plate, a portion in the length of the sleeve being broken away to get the view into less space. Fig. 2 is a sectional plan view of the same, the plane of the section cutting through the wings of the inner sleeve at the top edge of the plate. Fig. 3 is a side elevation of the lower end of the inner floor-sleeve and attached plate with a portion of the plate broken away. Fig. 4 is a central vertical section of the lower end of the outer floor-sleeve and side elevation of the lower end of the inner floor-sleeve.

A designates the outer floor-sleeve, having at its upper end a horizontal flange 5 for resting upon the floor lying immediately above the ceiling to which the ceiling-plate B is to be applied. The lower end of this outer floor-sleeve is provided with a circumferential and internal bur or flange 6, which projects inwardly beyond the inner wall of said sleeve, or, in other words, the internal diameter of said flange is less than the internal diameter at the body of the said outer sleeve above said flange. This flange preferably extends obliquely around said sleeve. A space is left on one side where said flange 6 is cut away or broken—as, for example, between the confronting ends of the flange 6, as shown in Fig. 1—both ends of the flange terminating at the longitudinal seam 7. If desired, this break or space in the flange may be at some other point in the circumference of the sleeve, but I prefer to form said break at said seam.

The inner sleeve C is fitted rather closely to the inside of the flange 6 and loosely to the interior of the outer sleeve above said flange, said outer and inner sleeves being telescopically arranged.

If desired, the inner sleeve may be slit longitudinally, as at 25, so that its upper end may expand and more closely fill the outer sleeve. I provide said inner sleeve with a series of projections 8, formed in or attached to said sleeve in any proper manner. They can readily be swaged up from the body of the metal, leaving them hollow on the inside. The inner diameter of the outer sleeve is large enough at all points above its flange 6 to readily receive these projections and permit them to move in any direction. The lower end of the inner sleeve I provide with wings 9, having outwardly-turned lugs 10 at their lower ends.

When I make the bur or flange 6 obliquely or spirally around the outer sleeve, I prefer to have the incline or pitch of said flange in going once around the sleeve about equal to the vertical distance from center to center of the projections 8.

The ceiling-plate B in its main features is substantially the same as in my Patent No. 546,461, dated September 17, 1895, and comprises the two attachable and detachable companion parts 11 and 12, having interlocking-tenons 13 and sockets for receiving said tenons, and the spring latch or holder 14. Such plate, however, of itself forms no part of my present invention, and any other two-part plate having suitable interlocking devices may be substituted therefor as an equivalent. In addition to the interlocking devices of this plate I employ the two spring-lugs 15. These lugs are formed of sheet metal, secured in any proper manner to the plates by one end, and extend in a circumferential direction, as shown, along the outside of the inner rim of the plate, but a little distance therefrom, leaving sufficient space to receive the wings 9, as hereinafter described.

The inner sleeve may be inserted endwise into the outer sleeve by bringing the series of projections in front of the break or space in the flange 6 before pushing the said inner sleeve in place. By turning the inner sleeve within the outer one so that one of the projections 8 of the series comes within the bur

or flange 6 the inner sleeve is secured against being dropped or pulled endwise out of the outer sleeve. A hole is bored through the ceiling and floor where a pipe is to pass and then the two sleeves together are passed through said hole from above and left with the flange 5 at the upper end of the outer sleeve resting upon the floor above the ceiling to hold the sleeve in place, and with the lower end of the inner sleeve projecting down below the ceiling or the lath where the ceiling is to be. The flange 5 of the outer sleeve may be nailed to the floor or said sleeve may be secured firmly in place in any other desired manner. The plumber will pass a pipe through the sleeve, and after the plumbing and the ceiling are finished the ceiling-plate is attached to the lower end of the lower sleeve, after putting the two parts thereof together to encircle the pipe, by first putting the plate opposite the end of said sleeve with the wings 9 extending down on the outside of the inner rim of the plate and in front of the ends of the spring-lugs 15, while the lugs 10 of said wings are in a position to pass under the lower edge of said spring-lugs. The ceiling-plate is then turned or rotated on the axis of the sleeve and inclosed pipe in the direction to force the spring-lugs into engagement with the wings 9, the body of said spring-lugs extending along the outer face of the wings 9, while the lower edges of said spring-lugs come into position just above the side lugs 10 on said wings which lie between the springs on their outer sides and the inner rim of the plate on their inner sides, as shown in Figs. 2 and 3. The inner sleeve may now be rotated to bring the series of projections 8 into alinement with the space or break in the flange 6 and then forced endwise upwardly until the ceiling-plate is up or nearly up against the ceiling. The combined plate and inner sleeve may then be rotated to force one of the projections into the flange 6, and, if the flange is oblique or spiral, still further rotating the inner sleeve will draw the ceiling-plate snugly up against the ceiling and hold it in place against any accidental displacement.

If desired, instead of sliding the inner sleeve within the outer sleeve to bring the plate to its approximate adjustment the plate may be moved upwardly by rotating the inner sleeve within the outer one when constructed as shown, because as one of the projections runs off one end of the flange 6 the next lower projection of the series immediately engages the other end of the flange, so that the inner sleeve is drawn upwardly by the mere act of rotating it in the proper direction.

I claim as my invention—

1. The combination of a floor-sleeve having at its lower end the wings 9 and their outwardly-extended lugs 10 with two separable companion parts of a ceiling-plate having their ends fitted to abut against each other, each part having on the outside of its inner rim the circumferentially-extended spring-lugs adapted to receive the said wings 9 between said lugs and inner rim of the said companion parts, substantially as described.

2. The combination of a floor-sleeve, having the wings 9 and their outwardly-extended lugs 10 at the lower end of said sleeve, and a ceiling-plate provided with spring-lugs secured by one end to said plate, whereby the body of said lugs extends outside of the wings 9 at a point above the lugs 10 of said wings, substantially as described.

3. A floor-sleeve comprising an outer sleeve having turned from its lower end the inwardly-projecting circumferential flange the ends of which flange are separated by a break or space, the inner diameter of said flange being less than the internal diameter of the body of said outer sleeve, and an inner sleeve having a series of external projections adapted to pass through said break or space and to extend upwardly inside of the outer sleeve which is large enough to readily receive and let said projections pass at all points above the said flange, substantially as described and for the purpose specified.

ALLAN J. BEATON.

Witnesses:
JAMES SHEPARD,
A. W. STIPEK.