W. O. Jones.

Steering.

No. 53,988. Patented Apr. 17, 1866.

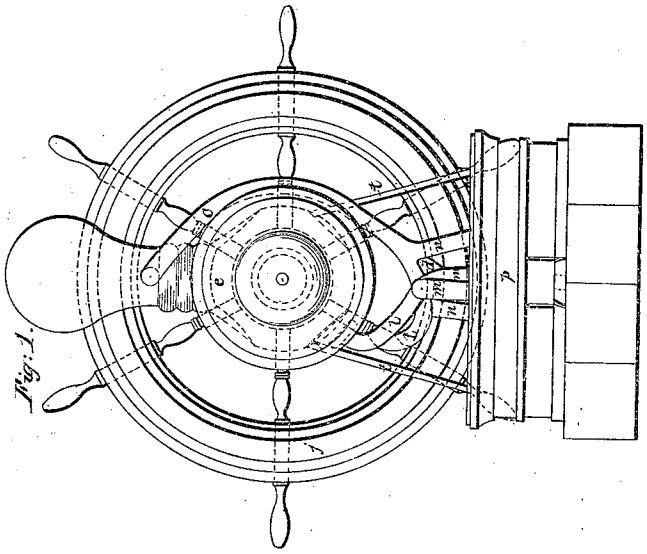

Fig. 1.

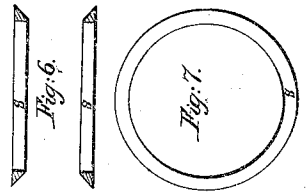

Fig. 6.

Fig. 7.

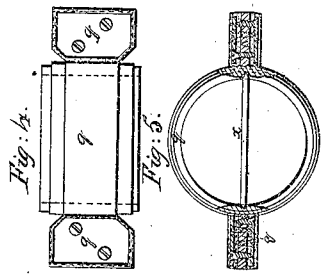

Fig. 4.

Fig. 5.

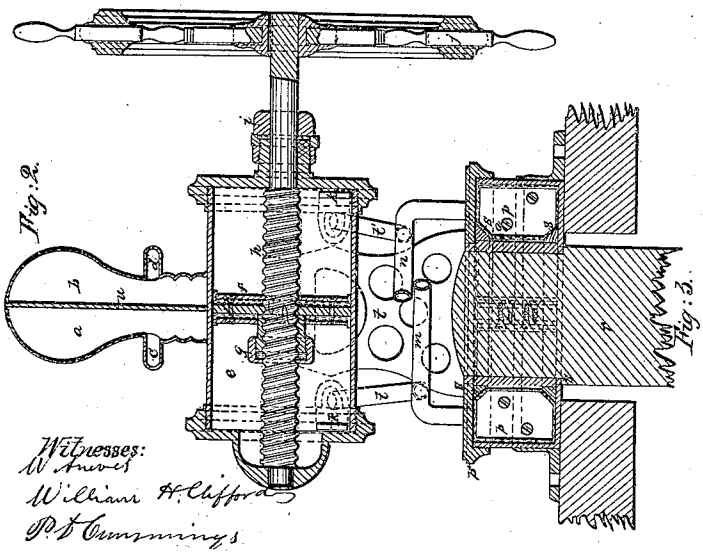

Fig. 2.

Fig. 3.

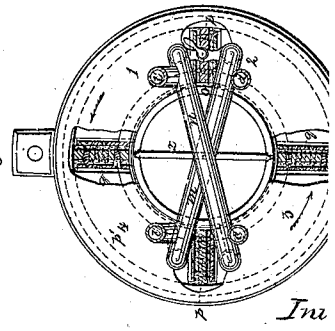

Witnesses:
William H. Clifford
P. F. Cummings

Inventor
W. O. Jones

UNITED STATES PATENT OFFICE.

W. O. JONES, OF PORTLAND, MAINE.

IMPROVED STEERING APPARATUS.

Specification forming part of Letters Patent No. **53,988**, dated April 17, 1866.

To all whom it may concern:

Be it known that I, W. O. JONES, of Portland, in the county of Cumberland and State of Maine, have invented a new and Improved Method of Steering Vessels by the Use of the Elastic Properties of Air and Hydraulic Power; and I hereby declare the following to be a full, clear, and exact description of the same, reference being had to the accompanying drawings, making part of this specification, in which—

Figure 1 shows a back end view of my invention; Fig. 2, a vertical transverse section of the same; Fig. 3, the head of the divided oil-chamber, showing the stationary and movable divisions; Fig. 4, the revolving cylinder with the levers or arms; Fig. 5, a top view of the same; Figs. 6 and 7, expansion-rings.

My invention consists in the combined use of a cylinder fitted with a piston and filled with oil and a divided air-chamber, in the use of certain pipes, connecting the same with a certain device to turn the rudder-head, and a device to turn the rudder-head, hereinafter to be described and explained.

e represents the cylinder, and *a* and *b* the divided air-chamber. *h* represents a screw by which the piston *f* is moved. Into either end of the cylinder are inserted the pipes *l l'* in the ports *k*. These pipes communicate between the cylinder *e* and the chamber *p'*. This chamber is separated into two compartments by the divisions *p p*. Into this chamber is fitted the revolving cylinder *q*, provided with wings or levers *v v* and the bar *x*. By this combination there are always four compartments in the chamber, as shown in Fig. 3. The pipes *l l'* and *m n* convey the oil from the cylinder to the chamber *p'* and from the chamber back to the cylinder. These pipes *m* and *n* enter the divided chamber at two different places on different sides of the stationary divisions *p p*, as represented in Fig. 3. The pipes have each two entrances into the chamber. The pipes *c* and *d* communicate with the air-chambers or divided air-chamber *a* and *b*, *c* leading from the pipe *n* and *d* from the pipe *m*, as shown in Fig. 3. Attached to the stationary divisions, as well as to the wings or levers of the revolving cylinder, are leather washers to prevent leaking. To the bar *x* is affixed the rudder-head *r*, which turns, of course, with the cylinder *q*.

o represents a connection-cock to equalize the oil in all the tubes. *s* represents expansion-rings to prevent the pressure of the oil through the joints of the chamber-cover. *g* is a stuffing-box on the piston, and *i* the same on the cylinder. *t* represents supports to the cylinder.

My invention operates as follows: Suppose the hand-wheel *j* is so turned as to bring the piston *f* toward the hand-wheel, the oil is forced out of the cylinder through the pipe *i* into *n*, and so into compartment 1, Fig. 3. By the same movement, also, it is forced along the pipe *n* and enters compartment 3. Thus there is at the same moment a pressure brought on corresponding sides of the two wings or levers *g g*, and in the same direction—in the direction indicated by the arrows. By this balance-power the revolving cylinder is turned, and with it the bar *x*, on which the rudder-head is fixed. At the same time the oil enters on the other side of the piston in the chamber *e* and fills the enlarged space made by the motion of the piston. A reverse motion of the hand-wheel reverses the motion of the oil, and of course the motion of revolving cylinder and bar *x*.

As the hand-wheel *j* and piston *f* cannot in any degree be moved by pressure on the rudder, it becomes necessary to provide some method for the rudder's yielding to the various and unequal strains brought upon it, especially in heavy seas. This is done by means of the divided air-chamber *a b* and the connecting-pipes *c* and *d*, which admit of the rudder's turning somewhat by the oil being pressed up either *c* or *d*, according to the side to which the rudder turns, and entering either one or the other of the two divisions. The entrance of the oil into the chamber compresses the air in proportion to the quantity of oil admitted, and the elasticity of the air, the instant the pressure is removed from the rudder, compels the oil to retire again into the pipes and compartments of the chamber *p'*, thus restoring the rudder to the position indicated by the hand-wheel. Accident to the rudder and its machinery is thus prevented. In any position in which the hand-wheel is turned it is held by the column of oil on either side of the piston *f*.

What I claim as my invention, and desire to secure by Letters Patent, is—

1. The combined use of atmospheric air and

oil in the above-described apparatus, in the manner and for the purposes described.

2. The combined arrangement of the cylinder *e*, piston *f*, divided air-chamber *a b*, tubes *l l'*, *m n*, and *c d* with the divided chamber *p'* and revolving cylinder *q* and levers *g g*, all as and for the purposes herein specified.

3. The chamber *p'*, constructed with the stationary and movable divisions, as and for the objects described.

W. O. JONES.

Witnesses:

WILLIAM H. CLIFFORD,

P. D. CUMMINGS.