(No Model.)

C. L. SAUNDERS.

HOISTING AND CONVEYING APPARATUS.

No. 456,640. Patented July 28, 1891.

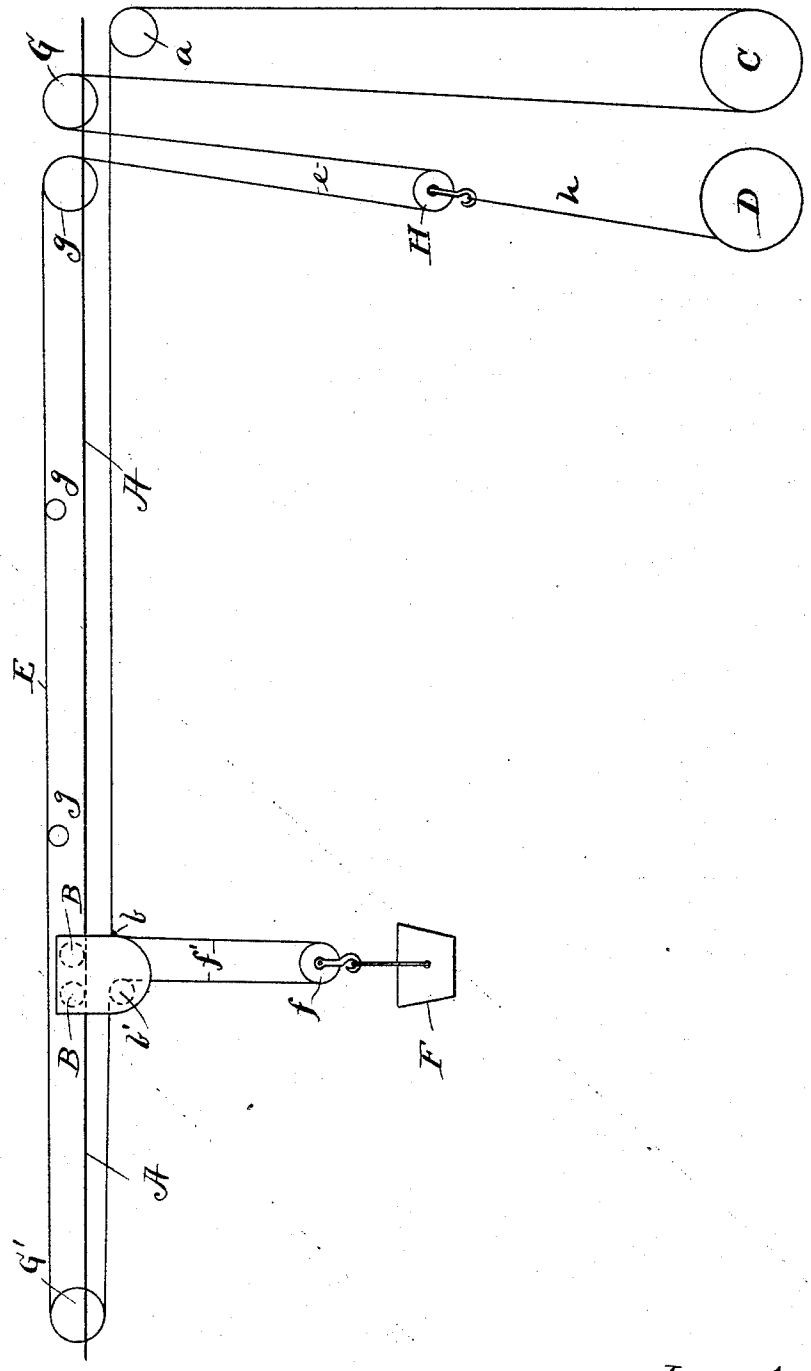

Witnesses.
E. B. Gilchrist.
C. H. Dorey

Inventor.
Cecil L. Saunders
By Lyggett and Lyggett
Attorneys.

THE NORRIS PETERS CO., PHOTO-LITHO., WASHINGTON, D. C.

UNITED STATES PATENT OFFICE.

CECIL L. SAUNDERS, OF CLEVELAND, OHIO.

HOISTING AND CONVEYING APPARATUS.

SPECIFICATION forming part of Letters Patent No. 456,640, dated July 28, 1891.

Application filed April 6, 1891. Serial No. 387,771. (No model.)

To all whom it may concern:

Be it known that I, CECIL L. SAUNDERS, of Cleveland, in the county of Cuyahoga and State of Ohio, have invented certain new and useful Improvements in Hoisting and Conveying Apparatus; and I do hereby declare the following to be a full, clear, and exact description of the invention, such as will enable others skilled in the art to which it pertains to make and use the same.

My invention relates to improvements in hoisting and conveying apparatus; and it consists in certain features of construction and in combination of parts hereinafter described, and pointed out in the claim.

In the accompanying drawing, the figure is a diagrammatic elevation of hoisting and conveying apparatus embodying my invention.

A A is supposed to represent a cable or the track of a truss on which the wheel-carrier B is adapted to travel.

C is the drum, on which the cable E winds and unwinds in propelling the carrier.

D is the hoisting-drum, and F is the bucket for hoisting the load. Drums C and D may be mounted on the same shaft or on different shafts, according to circumstances, these drums being respectively provided with suitable and preferably friction-clutches for starting and stopping and with means for reversing the drums independent of each other.

I will remark that there are a great variety of hoisting-engines having two drums, almost any one of which would answer the purpose. The two ends of cable E are attached to the carrier—for instance, at *b*—and from thence one section of the cable leads to and over sheave *a*, and from thence leads to and around drum C, the cable being usually coiled once or twice around this drum to give the necessary friction. From thence the cable returning leads over sheave G and from thence over sheave G′, these sheaves G G′ being located at the extremes of the route, the cable passing over as many intermediate sheaves *g* as may be necessary to support the cable. From sheave G′ cable E leads over sheave *b*′, connected with the carrier, and from thence leads under sheave *f* of the fall-block that supports the bucket, the cable in passing around the latter sheave forming the primary loop *f*′, the cable from sheave *b*′ leading back and connecting with the carrier at *b*, as aforesaid, there being enough slack of the cable to allow the bucket to reach the ground. With such construction it is evident that the carrier will be drawn by the cable in one direction or the other, according as drum C is rotated in one direction or the other.

For raising and lowering the bucket is provided as follows, to wit: H is a block mounted on the upper section of the cable, usually near the end of the route next the hoisting-engine, for instance, as shown. The housing of this block has attached a cable *h*, that leads to and is adapted to wind on drum D. While drum C is at rest, if drum D be revolved in the direction to wind up cable *h*, thereby depressing sheave H and making a "secondary," so called, take-up loop *e* in the cable, it is evident that the slack of the cable will be transferred from the loop at the hoisting-bucket to loop *e*, and that the hoisting-bucket will be elevated. By reversing drum D, so as to unwind cable *h*, the hoisting-bucket and its load will descend by gravity. The two drums C and D, being, as aforesaid, operated independent of each other, it follows that the hoisting and lowering of the bucket may be done simultaneously with the conveying. For instance, while the carrier is traveling toward the dumping-ground drum D may be set in motion to lower the bucket, or the bucket may be raised or lowered more or less while the carrier is traveling in either direction. In hoisting the load, as soon as the bucket is raised far enough to clear, for instance, the vessel, car, or ground, as the case may be, the carrier may be set in motion, and the bucket may be further elevated to clear objects along the route while the bucket is being carried to its destination. After the dumping the bucket may be elevated while the carrier is being returned to the starting-point. This saves much time over apparatus where the carrier must remain at rest during the hoisting and lowering of the bucket.

Almost any of the dumping devices in use may be used in connection with my improved apparatus.

The apparatus is extremely simple and comparatively inexpensive and is completely under the control of the operator.

What I claim is—

In hoisting and conveying apparatus, a carrier, a cable engaging the carrier from different directions, a drum for actuating the cable in propelling the carrier, such cable having a primary loop at the carrier for hoisting the load, the cable having a secondary or take-up loop, a block, a cable attached thereto, and hoisting-drum for operating the take-up loop, substantially as set forth.

In testimony whereof I sign this specification, in the presence of two witnesses, this 24th day of March, 1891.

CECIL L. SAUNDERS.

Witnesses:
C. H. DORER,
WARD HOOVER.