(12) INTERNATIONAL APPLICATION PUBLISHED UNDER THE PATENT COOPERATION TREATY (PCT)

(19) World Intellectual Property Organization
International Bureau

(43) International Publication Date
22 January 2004 (22.01.2004)

PCT

(10) International Publication Number
WO 2004/007965 A1

(51) International Patent Classification[7]: F04C 2/22, 2/10, 11/00

(21) International Application Number: PCT/IB2003/003172

(22) International Filing Date: 14 July 2003 (14.07.2003)

(25) Filing Language: English

(26) Publication Language: English

(30) Priority Data:
02291806.4 17 July 2002 (17.07.2002) EP

(71) Applicant *(for all designated States except US)*: **ELTHOM ENTERPRISES LIMITED** [CY/CY]; Mitsis Building 1, 1st Floor, Office 4 Eleftherias Square, PO Box 21294, 1505 Nicosia (CY).

(72) Inventor; and

(75) Inventor/Applicant *(for US only)*: **GORBAN, Alexander** [UA/UA]; App. 9, 26-b Str Yaroslav Val, Kiev, 01034 (UA).

(74) Agents: **INTES, Didier** et al.; 158 rue de l'Université, F-75340 Paris Cedex 07 (FR).

(81) Designated States *(national)*: AE, AG, AL, AM, AT (utility model), AT, AU, AZ, BA, BB, BG, BR, BY, BZ, CA, CH, CN, CO, CR, CU, CZ (utility model), CZ, DE (utility model), DE, DK (utility model), DK, DM, DZ, EC, EE (utility model), EE, ES, FI (utility model), FI, GB, GD, GE, GH, GM, HR, HU, ID, IL, IN, IS, JP, KE, KG, KP, KR, KZ, LC, LK, LR, LS, LT, LU, LV, MA, MD, MG, MK, MN, MW, MX, MZ, NI, NO, NZ, OM, PG, PH, PL, PT, RO, RU, SC, SD, SE, SG, SK (utility model), SK, SL, SY, TJ, TM, TN, TR, TT, TZ, UA, UG, US, UZ, VC, VN, YU, ZA, ZM, ZW.

(84) Designated States *(regional)*: ARIPO patent (GH, GM, KE, LS, MW, MZ, SD, SL, SZ, TZ, UG, ZM, ZW), Eurasian patent (AM, AZ, BY, KG, KZ, MD, RU, TJ, TM), European patent (AT, BE, BG, CH, CY, CZ, DE, DK, EE, ES, FI, FR, GB, GR, HU, IE, IT, LU, MC, NL, PT, RO, SE, SI, SK, TR), OAPI patent (BF, BJ, CF, CG, CI, CM, GA, GN, GQ, GW, ML, MR, NE, SN, TD, TG).

Published:
— *with international search report*

[Continued on next page]

(54) Title: ROTARY SCREW MACHINE END METHOD OF TRANSFORMING A MOTION IN SUCH A MACHINE

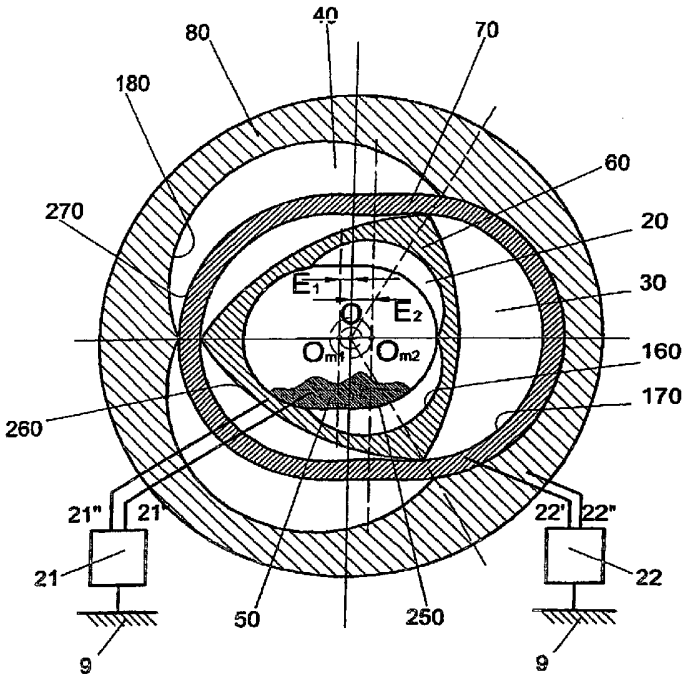

(57) Abstract: In order to more effectively use the constructional volume of a volume screw machine of rotary type, a plurality of sets (80, 70; 60, 50) of female elements having an inner screw surface and of male elements having an outer screw surface is provided, wherein in each set a rotary motion of at least one element is created. If the motion of elements in different sets (80, 70; 60, 50) is synchronized, one can provide for a dynamically balanced machine.

WO 2004/007965 A1

For two-letter codes and other abbreviations, refer to the "Guidance Notes on Codes and Abbreviations" appearing at the beginning of each regular issue of the PCT Gazette.

ROTARY SCREW MACHINE AND METHOD OF TRANSFORMING A MOTION IN SUCH A MACHINE

FIELD OF THE INVENTION

The invention relates to a method of transforming a motion in a volume screw machine of rotary type and to such a rotary screw machine.

PRIOR ART

Volume screw machines of rotary type comprise conjugated screw elements, namely an enclosing (female) screw element and an enclosed (male) screw element. The first (female) screw element has an inner screw surface (female surface), and the second (male) screw element has an outer screw surface (male surface). The screw surfaces are non-cylindrical and limit the elements radially. They are centred around respective axes which are parallel and which usually do not coincide, but are spaced apart by a length E (eccentricity).

A rotary screw machine of three-dimensional type of that kind is known from US 5,439,359, wherein a male element surrounded by a fixed female element is in planetary motion relative to the female element.

A first component of this planetary motion drives the axis of the male surface to make this axis describe a cylinder of revolution having a radius E about the axis of the female surface, which corresponds to an orbital revolution motion. That is, the axis of the second (male) element rotates about the axis of the first (female) element, wherein the latter axis is the principal axis of the machine.

A second component of this planetary motion drives the male element to make it rotate about the axis of its screw surface. This second component (peripheral rotation) can also be called swivelling motion.

Instead of providing a planetary motion, a differential motion can be provided. Usually, synchronizing coupling links are used therefor. However, the machines can also be self-synchronized by providing suitable screw surfaces.

Rotary screw machines of volume type of the kind described above are known for transforming energy of a working substance (medium), gas or liquid, by expanding, displacing, and compressing the working medium, into mechanical energy for engines or vice versa for

compressors, pumps, etc. They are in particular used in downhole motors in petroleum, gas or geothermal drilling.

In most cases, the screw surfaces have cycloidal (trochoidal) shapes as it is for example known from French patent FR-A-997957 and US 3,975,120. The transformation of a motion as used in motors has been described by V. Tiraspolskyi, "Hydraulical Downhole Motors in Drilling", the course of drilling, p.258-259, published by Edition TECHNIP, Paris.

The effectiveness of the method of transforming a motion in the screw machines of the prior art is determined by the intensity of the thermodynamic processes taking place in the machine, and it is characterized by the generalized parameter "angular cycle". The cycle is equal to a turn angle of any rotating element (male, female or synchronizing link) chosen as an element with an independent degree of freedom.

The angular cycle is equal to a turn angle of a member with independent degree of freedom at which an overall period of variation of the cross section area (or overall opening and closing) of the working chamber, formed by the male and female elements, takes place, as well as axial movement of the working chamber by one period P_m in the machines with an inner screw surface or by one period P_f in the machines with an outer screw surface.

The known methods of transforming a motion in volume screw machines of rotary type with conjugated elements of a curvilinear shape realized in the similar volume machines have the following drawbacks:

- limited technical potential, because of imperfect process of organizing a motion, which fails to increase a quantity of angular cycles per one turn of the drive member with the independent degree of freedom;
- limited specific power of similar screw machines;
- limited efficiency;
- existence of reactive forces on the fixed body of the machine.

SUMMARY OF THE INVENTION

It is an object of the invention to solve a problem of widening a technical and functional potential capabilities of the method of

transforming a motion in screw machines and to increase the specific power and capacity of the screw machines, to decrease the total heat losses, and to decrease reactions on the supports of the volume screw machines.

The invention provides a rotary screw machine comprising at least two sets of conjugated elements, each set comprising a first element having an inner screw surface and enclosed therein a second element having an outer screw surface, wherein the machine comprises an outer set of conjugated elements and at least one inner set of conjugated elements, wherein each inner set of conjugated elements is placed in a cavity of an element of another set of conjugated elements. The sets of conjugated elements are placed coaxially in cavities of each other.

It is to be noted that one element can be part of two different sets. Such an element can have both an outer screw surface and an inner screw surface, thereby being the second element for an outer set of conjugated elements and the first element for an inner set of conjugated elements at the same time. Preferably, the elements are engaged in cavities of each other.

Accordingly, the method of transforming a motion in a volume screw machine makes use of a machine of the type mentioned above, wherein axes of the first and second elements are parallel, and wherein at least one of the first and second elements of each set is rotatable about its axis. According to the invention, a rotary motion of at least one element in each set is created. In a preferred embodiment, a planetary motion of at least one element in each set is created.

The invention therefore uses the machine constructional volume more effectively, providing a higher number of working (displacing) chambers simultaneously, a higher number of working cycles per rotation of a drive shaft, and it thereby increases the efficiency.

According to a preferred embodiment of the invention, the motion of the elements is synchronized in such a manner as to provide for a dynamically balanced machine. It is advisable to mechanically couple the rotatable elements to that end.

This embodiment has the advantage that the machine works more stably, and less effort has to be made for stabilizing the whole

machine construction, i.e. the support of the machine does not have to be too heavy and too elaborated.

As mentioned above, the axes of some of the elements of the different sets (which form a first group) coincide (with the principal axis of the machine), whereas the axes of the other elements do not coincide with the principal axis and mostly do not coincide with each other. In most cases, either the first axes of each set of conjugated elements coincide with each other or the second axis of each set of conjugated elements coincide. Only rarely, an embodiment of the machine provides for a structure in which the axis of the first element of a first set of conjugated elements coincides with the axis of the second element of another set of conjugated elements. According to the preferred embodiment, the non-coinciding axes are revolved in such a manner about the coinciding axis (about the principal axis) as to maintain the distance relationship of the non-coinciding axes with regard to each other and with regard to the coinciding axis (the principal axis).

By providing that feature, one can arrange the elements in such a manner that the mass centre (centre of gravity of a slice of the element) of the whole construction is placed in the principal axis. If the distance relationship of the non-coinciding axis is maintained, it is possible to prevent the mass centre from migrating, i.e. from moving. The mass relationship of the elements having non-coinciding axes is thereby maintained, and the elements with coinciding axes do anyhow have their mass centres placed in the principal axis.

That method can be further developed in such a manner that the motion of the elements of different sets of conjugated elements about their respective axes is also synchronized, i.e. the swivelling of the elements is synchronized (in addition to synchronization of their revolution).

There are several possibilities for providing for such a synchronization.

Generally, one can choose two kinds of rotations of the first group of rotations comprising a) the rotation of the first element of one set of conjugated elements about the first axis, b) the rotation of the second element of one set of conjugated elements about the second axis, and c) a rotation of the first axis about the second axis or a rotation of the

second axis about the first axis. These two kinds of rotation can then be (mechanically) synchronized each with a respective one of a second group of rotations comprising d) the rotation of the first element of another set of conjugated elements about the first axis, and e) the rotation of the second element of another set of conjugated elements about the second axis.

This embodiment which has been described in a general manner can be split up into four different special preferred embodiments.

In the first preferred embodiment of the method according to the invention, first and second sets of conjugated elements each comprise a planetarily moving element, and the rotations of the axes of the planetarily moving elements of the first and second set are synchronized (revolutions are synchronized), and the rotations of the planetarily moving elements about their axes are synchronized (swivelling is synchronized).

In the second preferred embodiment, first and second sets of conjugated elements each comprise a differential motion, and rotations of the axes of the first elements of the first and second sets are synchronized (revolutions are synchronized), and rotations of the axes of the second elements of the first and second sets are synchronized (other revolutions are also synchronized).

In a third preferred embodiment of the method according to the invention, a first set of conjugated elements comprises a planetary motion and a second set of conjugated elements comprises a differential motion, and rotations of the axes of the first elements of the first and second sets are synchronized (revolutions are synchronized), and rotations of the axes of the second elements of the first and second sets are synchronized (other revolutions are also synchronized).

In a fourth preferred embodiment of the method according to the invention, a first set of conjugated elements comprises a planetary motion and a second set comprises a synchronizing coupling link for providing a differential motion, and a rotation of the axis of an element of the first set of conjugated elements is synchronized with a rotation of the synchronizing coupling link of the second set of conjugated elements.

In all of the embodiments mentioned above, the motion transfer between elements of the groups can be carried out by putting the

curvilinear enveloping surfaces of the first and second conjugated elements into mechanical contact thereby forming kinematic pairs.

If a rotary screw machine of the kind discussed above comprises three different sets of elements, one can firstly choose three kinds of state which comprise a) the rotation (or state of immobility) of the first element (female for outer envelope or male for inner envelope) of one set of the three elements about a central fixed axis thereof and the rotation (or state of immobility) of a third element (synchronizer) of one set of the three elements about a central fixed axis thereof, b) a revolution of an axis of the second element (initial trochoid) of one set about a fixed central axis thereof on a synchronizing coupling link, c) swivelling of the second element of one set with the help of a synchronizing coupling link (crank) or a third (male) conjugated screw element which is coaxial to the first one. The above-mentioned three kinds of state can then secondly be (mechanically) synchronized each with a respective one of a second group of state comprising d) the rotation (or state of immobility) of the first element (male for outer envelope or female for inner envelope) of another set of the three conjugated elements about a central fixed axis thereof and the rotation (or state of immobility) of a third element (synchronizer) of another set of the three conjugated elements about a central fixed axis thereof, e) a revolution of an axis of the second element (initial trochoid) of another set about a fixed central axis thereof on a synchronizing coupling link and f) swivelling of the second element of another set.

BRIEF DESCRIPTON OF THE DRAWING

The invention will be more easily apparent from the following description of a preferred embodiment thereof which is described with respect to the drawing, in which:

Fig.1 shows the cross section of a volume screw machine of rotary type according to the present invention which is used to perform the method according to the present invention.

DESCRIPTION OF A PREFERRED EMBODIMENT

Fig.1 shows the cross section of a rotary screw machine according to the present invention. In order to increase the efficiency and

productive capacity of a three-dimensional screw volume machine, the present machine has more than a single set of male elements (enclosed elements, i.e. elements having an outer screw surface) and female elements (enclosing elements, i.e. elements comprising an inner screw surface). Rather, two sets of conjugated elements 80, 70 on the one hand and 60, 50 on the other hand are engaged one in the other, i.e. an inner set 50, 60 of conjugated screw elements is placed in a cavity of a screw element 70 of a second set of screw elements. The screw elements are set coaxially ("screwed in") in the cavities of each other. In fact, one could also speak of three sets of screw elements because the screw element 70 also acts as a first, enclosing (female) element, and the first element 60 of the other set of conjugated elements 50, 60 also acts as an enclosed (male) element. The elements 70 and 60 therefore also form a set of conjugated elements.

The external element 80 (a female element) with inner screw surface (inner enclosing surface) 180 having a symmetry order $n_f=3$ and conjugated with it element 70 (male element) with outer screw surface (outer enclosed surface) 270 in the form of an initial trochoid having a symmetry order $n_m=2$ form working chambers 40. These elements can be considered as a main set of internally conjugated screw elements which are positioned in such a manner that a centre O of an end section of the first element 80 is coincident with a central longitudinal axis Z of the screw machine, and a centre O_{m2} of the second element 70 is offset by a distance E_2 (eccentricity) from axis Z. To control the motion of the first and second elements 80, 70 relative to a fixed main body 9, they are mechanically connected to outlets 22' and 22", respectively, of a control device 22.

The first element 60 (female element) with inner screw surface 160 in the form of an outer envelope having a symmetry order $n_f=3$ and the inner, second element 50 (male element) with outer screw surface 250 in the form of an initial trochoid having a symmetry order $n_m=2$ form working chambers 20. These elements can be considered as an additional set of internally conjugated screw elements positioned in such a manner that a centre O of an end section of the first element 60 is coincident with the central longitudinal axis Z of the screw machine, and a centre O_{m1} of the second element 50 is offset by a distance E_1 (eccentricity) from axis Z.

To control the motion of the elements 60 and 50 relative to the fixed main body 9, they are mechanically connected to outlets 21' and 21", respectively, of a control device.

An additional inner screw surface 170 of element 70 and an additional outer screw surface 260 of element 60 form additional working chambers 30 such that the total number of working chambers in Fig.1 is nine. (In the interior of the elements 80 and 60, three working chambers are provided when the elements 70 and 50 are moved with respect to the situation shown in the figure.)

In the general case, the number of pairs of conjugated screw elements can be anyone and is restricted by the overall dimensions of the machine.

A first two-arc element 50 (inner male element) is conjugated with inner three-arcs profile 160 (outer envelope of a family in the form of three-arc profile) of element 60. This inner profile 160 of three-arc element 60 is a female element for the two-arc profile 250 of element 50, but is a male element for the second two-arc element 70 with inner profile 170 (two-arcs initial trochoid). The outer three-arcs profile 260 (inner envelope of a family) of element 60 is conjugated with the inner profile 170 of element 70. It occurs the same with this second two-arc element 70, which is also male and female, and which outer profiles 270 (two-arcs initial trochoid) is engaging in the inner three-arcs profile 180 (outer envelope of a family) of a last three-arc element 80.

In this particular case, the element 70 is mechanically connected to element 50 to swivel about axes passing through centre O_{m2}, O_{m1}, respectively, and the element 60 is mechanically rigidly connected to the element 80, such that the number of working chambers 20, 30, 40 has increased from three to nine. The inner and outer surfaces 250, 160, 260, 170, 270, 180 are in mechanical contact so as to form these working chambers 20, 30, 40.

In order to mechanically connect elements 50 and 70, one of the two elements 50 or 70 can be hinged on a crank of a synchronizing coupling link O_{m1}-O or O_{m2}-O passing throughout the body of element 50, whereas both elements 50, 70 simultaneously have no way of doing it. The connection is made in such a manner that the centres O_{m1}, O_{m2} are in all cases disposed on one line O_{m1}-O-O_{m2} at different sides of the central

longitudinal axis Z, so that the elements 50, 70 form a statically and dynamically balanced rotary system of elements. That balance can be provided by selecting the masses of the elements 50, 70, namely in such a manner that the mass centre (centre of gravity of the slices of the element) of the element 70 is placed on the axis passing through the centre O_{m2} and that the mass centre of the element 50 is placed in the centre O_{m1}, wherein the mass centre of elements 50 and 70 when taken together is placed in the centre O. In other words, the coupled motion of the elements 50, 70 is performed in such a manner that the mass centre of the elements 50 and 70 when taken together always remains in the centre O and does not migrate.

To generate interconnected motions of elements in sets and at the same time synchronize the motions of elements of different sets, the control devices 21, 22 are introduced. The outlets 21', 21" and 22', 22" of the control devices 21, 22 are mechanically connected to the elements 50, 60 and 70, 80, respectively. According to the invention, the control devices can generate the motions with two degrees of freedom of which one is independent. That is, they can generate a planetary motion of one element of the set around another fixed element. Alternatively, the control devices can generate a motion with three degrees of freedom, i.e. these devices can generate a differentially connected rotation of one element about its fixed axes, any rotary component of a planetary motion-revolution of an axis of the other element about the fixed axis of the first element or swivelling of the second element about its own axis, and a rotation of a synchronizing coupling link O_{m1}-O about the fixed axis of the first element. In other words, the motion of set elements with three degrees of freedom is generated of which two degrees can be chosen as independent ones.

In the invention, there are four different variants of transforming a motion of elements of the machine:

a) generation of a revolution of an axis of an element executing a planetary motion (including a circular progressive motion) and generation of a first synchronous revolution of an axis of an element of another set that is analogous to that element,

b) generation of a differential motion of the two screw elements of one set and generation of a synchronous

differential motion of two analogous screw elements of another set,

c) generation of a revolution of an axis of a screw element executing a planetary motion in one set and generation of a synchronous revolution of an axis of a screw element executing a differential motion in another set,

d) generation of a differential motion of an external element 60 of an inner set of elements 50, 60 and a synchronizing coupling link O_{m1}-O of the inner set or generation of a differential motion of an external element of an outer set 70, 80 and a synchronizing coupling link O_{m2}-O of the outer set on the one hand, and generation of a synchronous differential motion of a pair of screw elements of another set on the other hand.

Regarding variant a), the synchronization of the two planetary motions of elements 50 and 70 takes place in the following manner: The control devices 21 and 22 which act in synchronism and in phase generate swivelling to elements 50 and 70 with equal angular velocities ω_s and with equal rotation phase, and the elements 60 and 80 are retained fixed. Due to self-synchronization, the elements 50 and 70 execute in synchronism a planetary motion during which the surfaces 250 and 270 are rolled out over the surfaces 160 and 180, and the mass centres of the elements 50 and 70 move around circles of radii E_1 and E_2 as balanced system, wherein the revolution takes place with an angular velocity $\omega_{re}=-2\omega_s$. The vertices of the immovable surface 260 slide over the movable surface 170.

Regarding variant b), the synchronization of the two differential motions of two sets (pairs) of elements 50 and 60 on the one hand and 70 and 80 on the other hand takes place in the following manner: The control devices 21 and 22 act in synchronism and in phase and generate a swivelling with a final angular velocity ω_s (or provide swivelling with zero velocity, i.e. a circular progressive motion) of the elements 50 and 70 with equal angular velocities and rotation phase, whereas the elements 60 and 80 rotate with a velocity of $\omega_s/2$ about the fixed axis Z. Due to self-synchronization, the elements 50 and 70 execute in synchronism a planetary (or circular progressive) motion, during which the surfaces 250 and 270 are rolled out over the surfaces 170 and 180, and the mass

centres of the elements 50 and 70 (O_{m1}, O_{m2}) move around circles of radii E_1 and E_2 as balanced system, wherein the revolution takes place with an angular velocity of $\omega_{re}=-\omega_s/2$. The vertices of the surface 260 of the movable element 60 slide over the movable surface 170 of the element 70.

Regarding variant c), it is to be noted that the generation of a revolution of an axis of the screw element 50 executing a planetary motion in one set 50 and 60 and the generation of a synchronous revolution of an axis of a screw element 70 executing a differential motion in another set 70, 80 is made in a manner similar to that described with respect to variants a) and b), but without putting the elements 60 and 70 into contact.

Turning now to variant d), the synchronization of a differential motion of the element 60 and a synchronizing coupling link O_{m1}-O with a differential motion of the elements 70 and 80 takes place in the following manner: The control devices 21 and 22 generate for instance a contra-rotary rotation in synchronism and in phase to the two elements 60 and 80 and to the synchronizing coupling link O_{m1}-O, i.e. with opposite directions of rotation, but with equal angular velocities, $-\omega_{ro}=\omega_{re}$, and since the surface 250 of the element 50 rolls over the surface 160 of the element 60, a swivelling of the element 50 with an angular velocity of $\omega_s=-2\omega_{re}$ is provided. In this case, the vertices of the movable surface 260 slide over the movable surface 170. Furthermore, it is necessary that the element 50 transmits a swivelling to element 70 in synchronism and in phase, wherein element 70 is rolled over the surface 180 of the movable element 80. The mass centres of the elements 50 and 70 coinciding with the centres O_{m1} and O_{m2} move around circles of radii E_1 and E_2 as balanced system, wherein the revolution takes place with an angular velocity of ω_{re}, and wherein these centres are placed on one line O_{m1}-O-O_{m2} during the whole process of revolution.

The motion transfer between the elements of the sets can be carried out by putting into mechanical contact the curvilinear enveloping surfaces of male and female conjugated elements, thereby forming kinematic pairs.

The angular cycle T_i of pair of female-male conjugated elements is given by equation: $T_i=2\pi/[n_{m,f}|(\omega_f/\omega_i)-(\omega_m/\omega_i)|]$ where: ω_f,

ω_m-own angular velocity of female and male elements about own centres; ω_i-angular velocity of independent element, e.g., element executing revolution motion and turn angle of which defines the value of T_i; $n_{m,f}$-symmetry order, n_m for hypotrochoid scheme with outer envelope and n_f for epitrochoid scheme with inner envelope.

Regarding said variants:

a) Hypotrochoid scheme (for outer envelope 180) of planetary motion of element 70 (profile 270) with fixed element 80, is defined by the following parameters: $\omega_{f(80)}=0$; $\omega_{re(70)}=1$; $n_{m(70)}=2$; $n_{f(80)}=3$; $\omega_{m(70)}=\omega_{s(70)}=\omega_{re(70)}(1-(n_f/n_m))=1(1-3/2)=-0.5$; $T_{i(re70)}=2\pi/2(0+0.5)=2\pi$; Epitrochoid scheme (for inner envelope 260) of planetary motion of element 70 (profile 170) with fixed element 60, is defined by the following parameters: $\omega_{m(60)}=0$; $\omega_{re(70)}=1$; $n_{m(60)}=3$; $n_{f(70)}=2$; $\omega_{f(70)}=\omega_{s(70)}=\omega_{re(70)}(1-(n_m/n_f))=1(1-3/2)=-0.5$; $T_{i(re\ 70)}=2\pi/2(-0.5-0)=2\pi$;

Regarding said variants:

b) Differential motion: Planetary motion of element 70 (profile 270) and rotation of element 80, is defined by the following parameters: $\omega_{f(ro,80)}=-1$; $\omega_{re(70)}=1$; $n_{m(70)}=2$; $n_{f(80)}=3$; $\omega_{m(70)}=\omega_{s(70)}=(\omega_f-\omega_{re})(n_f/n_m)+\omega_{re}=(-1-1)(3/2)+1=-2$; $T_{i(re,70)}=2\pi/2(-1+2)=\pi$; Differential motion: Planetary motion of element 70 (profile 170) and rotation of element 60, is defined by the following parameters: $\omega_{m(ro,60)}=-1$; $\omega_{re,70}=1$; $n_{m(60)}=3$; $n_{f(70)}=2$;$\omega_{f(s,70)}=\omega_{s(70)}=(\omega_m-\omega_{re})(n_m/n_f)+\omega_{re}=(-1-1)(3/2)+1=-2$; $T_{i(re,70)}=2\pi/2(-2+1)=\pi$; From the above it is evident that, in case of differential motion of elements, angular cycle twice decreases and accordingly the efficiency of method increases.

The direction of axial movement of working medium along axis Z in each set of chambers 40, 30 and 20 is defined by the direction of revolution of centres O_{m1}, O_{m2}, therefore in order to choose the same directions of working medium movement, control devices 21, 22 give the same directions of revolution of centres O_{m1}, O_{m2}, and in order to choose the opposite directions of working medium movement in chambers 40, 30 and 20, control devices 21, 22 give the opposite direction of revolution of centres O_{m1}, O_{m2}.

It is to be noted that the working medium is transported along the Z axis in the working chambers of the element sets. If the direction of that axial movement is to be changed, one has to change the direction of

revolution of the centres O_{m1}, O_{m2} of the elements executing planetary motion in the sets.

CLAIMS

1. A method of transforming a motion in a volume screw machine, said machine having at least two sets of conjugated elements (80, 70; 60, 50), each set comprising a first element (80, 60) having an inner screw surface (180, 160) centred around a first axis (passing through centre O) and a second element (70, 50) having an outer screw surface (270, 250) centred around a second axis (passing through centres O_{m2}, O_{m1}), wherein an inner set (50, 60) of conjugated elements is placed coaxially in at least one cavity of the second element of an outer set (80, 70) of conjugated elements,

wherein the first and second axes (passing through centres O; O_{m1}, O_{m2}) are parallel and wherein at least one of said first and second elements of each set is rotatable about its axis,

said method comprising:

the creation of a rotary motion of at least one element in each set.

2. The method of claim 1, characterized in that the motion of said elements is synchronized in such a manner as to provide for a dynamically balanced machine.

3. The method of claim 1 or 2, characterized in that each set comprises an element centred about an axis which coincides with a principal axis of the machine, and wherein the respective second element of each set is centred about an axis which is not coinciding with the principal axis, wherein the non-coinciding axes are rotated in such a manner about the principal axis as to maintain the distance relationship of the non-coinciding axes with regard to each other and with regard to the principal axis.

4. The method of any of claims 1 to 3, characterized in that

said first axes of each set of conjugated elements coincide, whereas the second axes are non-coinciding, or that said second axes of each set of conjugated elements coincide whereas the first axes are non-coinciding,

and that the non-coinciding axes (passing through centres O_{m1}, O_{m2}) are rotated in such a manner about the coinciding axes (passing through centre O) as to maintain the distance relationship of the non-coinciding axes (passing through centres O_{m1}, O_{m2}) with regard to each other and with regard to the coinciding axes (passing through centre O).

5. The method of any of claims 2 to 4, characterized in that

a motion of the elements of different sets of conjugated elements about their respective axes is synchronized.

6. The method of any of claims 1 to 5, characterized in that

of a first group of rotations comprising

a) the rotation of the first element of one set of conjugated elements about the first axis,

b) the rotation of the second element of one set of conjugated elements about the second axis,

c) a rotation of the first axis about the second axis or a rotation of the second axis about the first axis,

at least two rotations are mechanically synchronized each with a respective one of a second group of rotations comprising

d) the rotation of the first element of another set of conjugated elements about the first axis,

e) the rotation of the second element of another set of conjugated elements about the second axis.

7. The method of claim 6,

wherein first and second sets of conjugated elements each comprise a planetarily moving element, and wherein the rotations of the axes of the planetarily moving elements of the first and second sets are synchronized, and wherein the rotations of the planetarily moving elements about their respective axes are synchronized.

8. The method of claim 6,

wherein first and second sets of conjugated elements each comprise a differential motion, and wherein rotations of the axes of the first elements of the first and second sets are synchronized, and wherein

rotations of the axes of the second elements of the first and second sets are synchronized.

9. The method of claim 6,

wherein a first set of conjugated elements comprises a planetary motion and a second set of conjugated elements comprises a differential motion, and wherein rotations of the axes of the first elements of the first and second sets are synchronized, and wherein rotations of the axes of the second elements of the first and second sets are synchronized.

10. The method of claim 6,

wherein a first set of conjugated elements comprises a planetary motion and a second set comprises a synchronization coupling link (O_{m1}-O; O_{m2}-O) for providing a differential motion, and wherein a rotation of the axis of an element of the first set of conjugated elements is synchronized with a rotation of the synchronizing coupling link of the second set of conjugated elements.

11. The method of any of claims 1 to 10,

characterized in that curvilinear inner surfaces (180, 170, 160) of the first elements (80, 70, 60) are put into mechanical contact with curvilinear outer surfaces (270, 260, 250) of the second elements (70, 60, 50), thereby carrying out said motion transfer.

12. A volume screw machine of rotary type, comprising at least two sets of conjugated elements (80, 70; 60, 50), each set comprising a first element (80, 60) having an inner screw surface (180, 160) and enclosed therein a second element (70, 50) having an outer screw surface (270, 250), said machine comprising an outer set of conjugated elements (80, 70) and at least one inner set of conjugated elements (60, 50), wherein each inner set of conjugated elements (60, 50) is placed in a cavity of an element (70) of another set of conjugated elements (80, 70).

13. The screw machine of claim 12,

characterized in that rotatable elements of the different sets of conjugated elements are mechanically coupled to each other such as to provide for a synchronized motion of said elements.

5

1/1

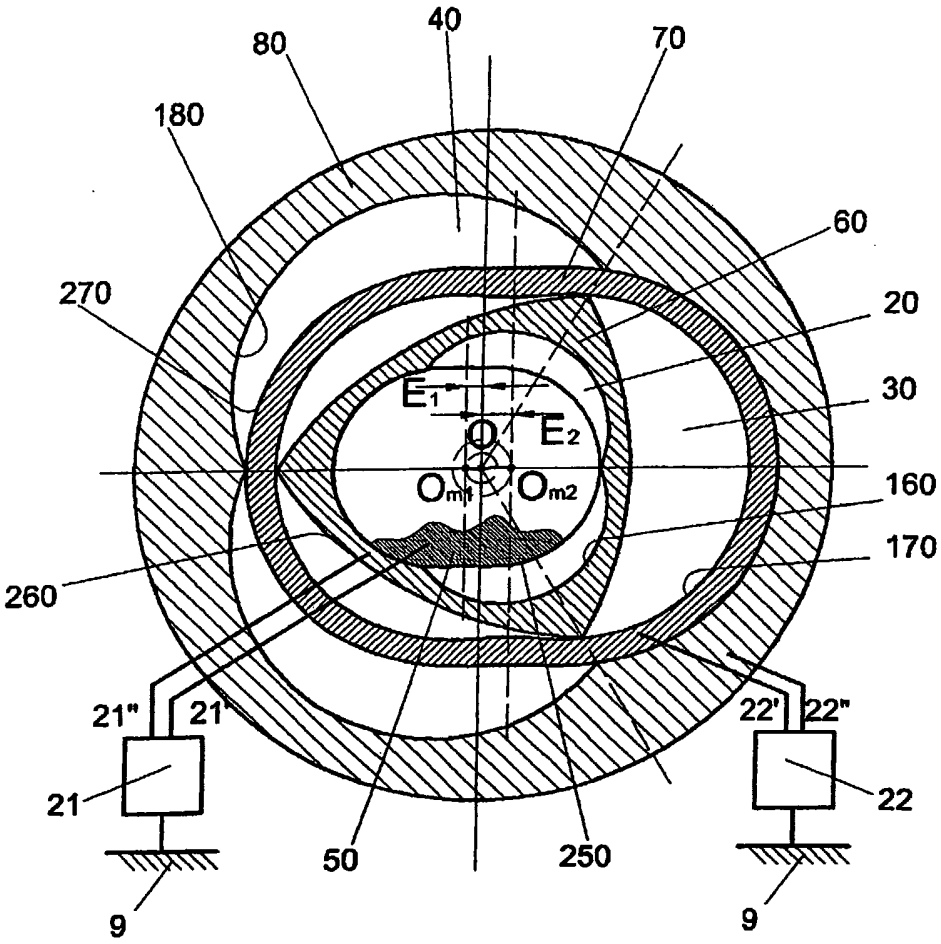
40
80
70
180
60
270
20
E1
30
O
E2
Om1
Om2
160
170
260
21"
21'
22'
22"
21
22
50
250
9
9

FIG.1

INTERNATIONAL SEARCH REPORT

International Application No
PCT/IB 03/03172

A. CLASSIFICATION OF SUBJECT MATTER
IPC 7 F04C2/22 F04C2/10 F04C11/00

According to International Patent Classification (IPC) or to both national classification and IPC

B. FIELDS SEARCHED

Minimum documentation searched (classification system followed by classification symbols)
IPC 7 F04C F01C

Documentation searched other than minimum documentation to the extent that such documents are included in the fields searched

Electronic data base consulted during the international search (name of data base and, where practical, search terms used)
EPO-Internal, WPI Data, PAJ

C. DOCUMENTS CONSIDERED TO BE RELEVANT

Category °	Citation of document, with indication, where appropriate, of the relevant passages	Relevant to claim No.
X	RU 2 140 018 C (BRODOV MIKHAIL EFIMOVICH ;GORBAN ALEKSANDR MIKHAJLOVICH (UA)) 20 October 1999 (1999-10-20) page 7, left-hand column, line 19 -page 7, right-hand column, line 25; figures 1,2 ---	1-14
A	US 3 760 777 A (LEROY M ET AL) 25 September 1973 (1973-09-25) abstract; figures 1,11 ---	1-14
A	US 3 910 733 A (GROVE LESLIE H) 7 October 1975 (1975-10-07) abstract; figures 1,3,11 -----	1-14

☐ Further documents are listed in the continuation of box C.

☒ Patent family members are listed in annex.

° Special categories of cited documents :

"A" document defining the general state of the art which is not considered to be of particular relevance

"E" earlier document but published on or after the international filing date

"L" document which may throw doubts on priority claim(s) or which is cited to establish the publication date of another citation or other special reason (as specified)

"O" document referring to an oral disclosure, use, exhibition or other means

"P" document published prior to the international filing date but later than the priority date claimed

"T" later document published after the international filing date or priority date and not in conflict with the application but cited to understand the principle or theory underlying the invention

"X" document of particular relevance; the claimed invention cannot be considered novel or cannot be considered to involve an inventive step when the document is taken alone

"Y" document of particular relevance; the claimed invention cannot be considered to involve an inventive step when the document is combined with one or more other such documents, such combination being obvious to a person skilled in the art.

"&" document member of the same patent family

Date of the actual completion of the international search	Date of mailing of the international search report
17 October 2003	24/10/2003

Name and mailing address of the ISA	Authorized officer
European Patent Office, P.B. 5818 Patentlaan 2 NL – 2280 HV Rijswijk Tel. (+31-70) 340-2040, Tx. 31 651 epo nl, Fax: (+31-70) 340-3016	Descoubes, P

Form PCT/ISA/210 (second sheet) (July 1992)

INTERNATIONAL SEARCH REPORT

Information on patent family members

International Application No
PCT/IB 03/03172

Patent document cited in search report	Publication date	Patent family member(s)	Publication date
RU 2140018 C	20-10-1999	RU 2140018 C1	20-10-1999
US 3760777 A	25-09-1973	FR 2146526 A5	02-03-1973
		AT 609072 A	15-01-1980
		BE 786347 A1	16-11-1972
		CA 963810 A1	04-03-1975
		CH 560319 A5	27-03-1975
		CS 158731 B2	25-11-1974
		DD 98336 A5	12-06-1973
		DE 2234781 A1	08-02-1973
		ES 404934 A1	16-06-1975
		GB 1394095 A	14-05-1975
		IT 964686 B	31-01-1974
		NL 7209878 A	18-01-1973
		PL 84796 B1	30-04-1976
		SE 386478 B	09-08-1976
US 3910733 A	07-10-1975	NONE	