Feb. 5, 1952 R. H. HUCKNALL 2,584,270

WRIST WATCH GUARD

Filed April 19, 1948

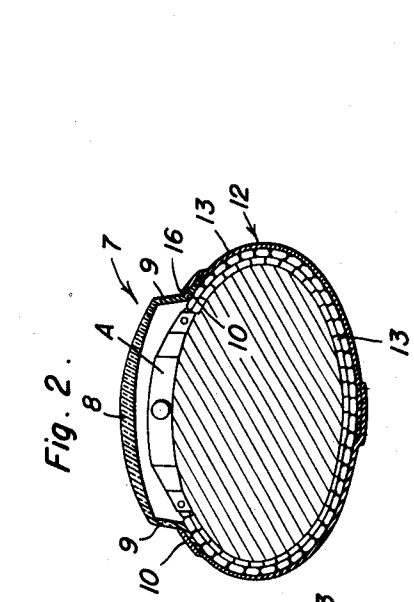

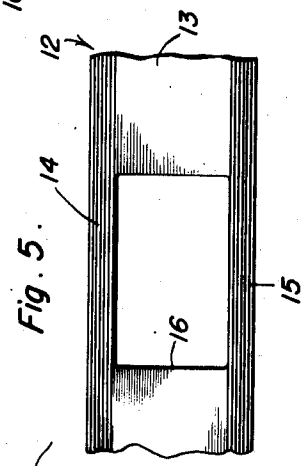

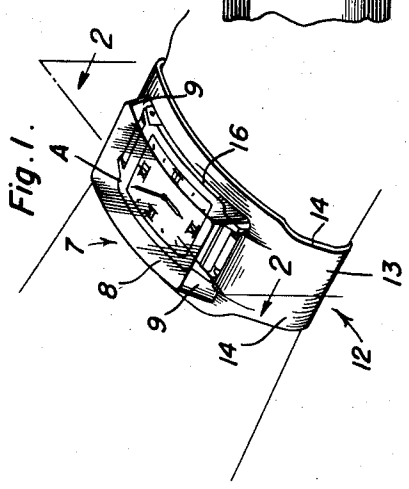

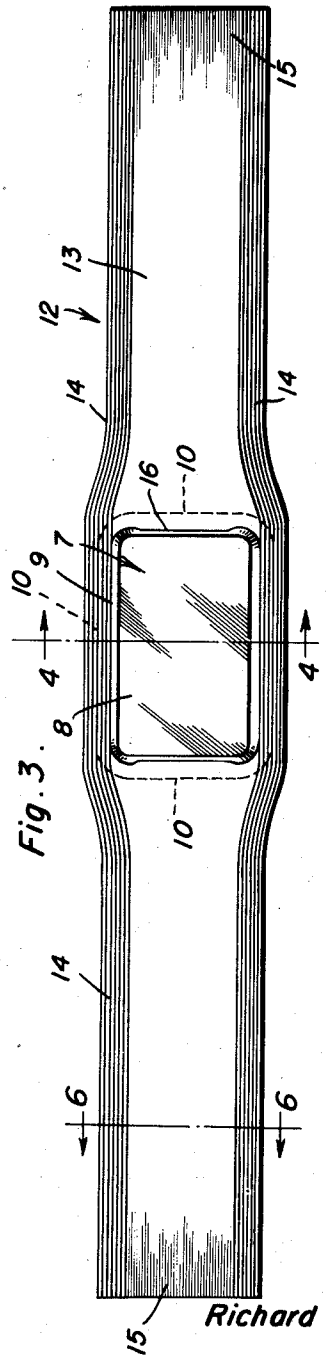

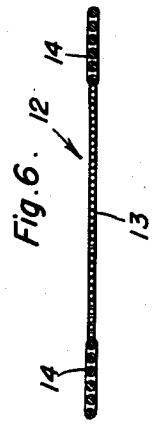

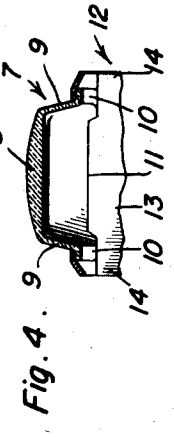

Richard H. Hucknall
INVENTOR.

BY Clarence A. O'Brien and Harvey B. Jacobson
Attorneys

Patented Feb. 5, 1952 2,584,270

UNITED STATES PATENT OFFICE

2,584,270

WRIST WATCH GUARD

Richard H. Hucknall, Bayside, N. Y.

Application April 19, 1948, Serial No. 21,920

1 Claim. (Cl. 58—105)

1

The present invention, as the title implies, has to do with a simple, economical and practical protective guard which is adapted to fit over and enclose a wrist watch and its attaching strap, whereby to protect said parts against accidental damage, scarring and undue wear and tear.

In carrying out the principles of the invention I have evolved and produced a readily applicable and removable guard which is characterized by an unbreakable transparent shield which houses the watch proper, and a combination endless elastic band which fits over and substantially covers the usual watch retaining strap, said guard being dust and dirt-proof and of great usefulness when worn by construction workers, mechanics, laborers, truck drivers and the like.

Another object of the invention is to provide a protective guard of the stated type which is characterized by a transparent plastic or equivalent shield, the latter having the form of a dome-like shield and being so designed and fashioned that it houses the watch with requisite nicety, fits comfortably and firmly against the wrist of the wearer, and readily exposes the dial of the watch for quick and easy reading.

A further object of the invention is to provide a novel and useful wrist watch guard, which despite its rugged construction, does not appreciably detract from desired appearances and does not interfere with the operation and usefulness of the protected watch.

A still further object of the invention is to provide a watch guard which will be durable, washable, light in weight, easy to apply on the wrist and which protects not only the watch but the watch retaining strap as well, the construction being such that adoption and use will aptly serve the needs of manufacturers, retailers and users.

In addition, it is an object of the invention to provide a watch guard of practical significance, one in which the parts are markedly distinct and conform to all necessary requirements and wherein the elasticity of the strap not only provides an effective retainer for the shield, but lends itself readily attachable to the shield in a manner to promote assembling whereby to thus appeal to the needs of manufacturers.

Other objects and advantages will become more readily apparent from the following description and the accompanying sheet of drawings.

In the accompanying drawings, wherein like numerals are employed to designate like parts throughout the views:

2

Figure 1 is a perspective view showing a wrist watch and strap guard constructed in accordance with the invention and illustrating same in use,

Figure 2 is a cross section on the line 2—2 of Figure 1, looking in the direction of the arrows,

Figure 3 is a top plan view with the guard detached,

Figure 4 is a cross section on the line 4—4 of Figure 3, looking in the direction of the arrows,

Figure 5 is a top plan view of the central portion of the strap removed from the shield, and

Figure 6 is an enlarged cross section on the line 6—6 of Figure 3, looking in the direction of the arrows.

The dome-like plastic shell or shield is denoted by the numeral 7 and is of the shape shown in Figures 2, 3 and 4. It includes a convexed lens portion 8, surrounding marginal rim walls 9, and outstanding endless flange means 10 carried by said walls. It will be noted in Figure 4 that the transverse ends are provided with clearance notches 11 to allow same to properly bridge portions of the wrist watch A and to insure firm seating of the flanges 10 on the wrist of the wearer. The shield, as shown in the drawings, is of general rectangular form with the rim walls flaring outwardly and downwardly toward the wrist of the wearer. It is understood, however, that since wrist watches vary in shapes, said shield may also, within the scope of the invention, be varied to conform to varying trade requirements. It is important that the shield be sufficiently large to encompass the watch, also sufficiently deep to accommodate varying trade requirements. It is preferred that the crown portion 8 be such in convex form that it provides limited magnifying properties which expedite reading the watch dial.

The retaining strap is denoted by the numeral 12 and is in the form of a composite endless elastic band. The main web portion is denoted at 13 and this is slightly elastic and porous (see Fig. 6). The marginal edge portions are of comparatively heavier elastic form as denoted at 14 for retentive purposes. The free end portions 15 are, in practice, sewed or otherwise connected to make the band endless. At the center I provide a substantially rectangular opening 16 and this is such that it fits down snugly over the outwardly flaring rim portion of the shield.

When the elastic band is fitted over the shell, the opening 16, which is slightly less in area than the outside measurements of the rim portion of the shield will spread and when the band is pressed down, the heavy elastic edges 14 will

cause same to hug the rim and firmly bind against the flange means 19. This coordination of parts affords a good connection between the band and shield and makes for a substantially dust-proof association of said parts. It also facilitates permanent cementing of the band portions to said flange means. The web portion of the band is sufficiently porous that, while being dust resistant, it will allow passage of sufficient air to avoid overheating and inconvenience to the wearer. The entire band is somewhat wider than the strap B of the wrist watch and, therefore, the fabric portion 13 practically covers the wrist watch strap whereas the ribbed elastic edge portions 14 overhang and hug the longitudinal edge portions of said strap.

By fitting over the wrist watch and seating firmly on the wrist the transparent plastic shell with its elastic band will protect the watch and strap from dust, dirt, scratches, and breakage, etc.

The plastic shell and the wrist band are each of one-piece construction and may be affixed permanently to one another in the course of manufacture. In the structural design I have chosen the plastic shell is primarily for sales appeal. The over-all watch guard will be durable, washable, light and easy to fit on the wrist; fitting over practically every make and model of present day wrist watches. As to size, it may be found advisable to manufacture it in more than one model and thus, better fit the watch that it will be required to cover. Therefore, a man with a small watch doesn't necessarily have to purchase a watch guard made large enough to fit larger watches.

I have designed the plastic shell with an edge flange completely around its base. This is to facilitate attachment to the elastic band. The band will be made in one piece with a section cut out the same size and shape as the sides of the plastic shell. When the two are assembled (the band being slipped over the plastic shell), the flanges of plastic shell will prevent the latter from slipping through said cut-out, and will also serve as the means for permanently cementing the two together. The elastic band will be slightly wider than the over-all plastic shell, so that when being worn the edges of the band will seat firmly on the wrist of the wearer. Any slight space that might occur between plastic shell (even though shell is curved to fit wrist), will now be dust-proof.

Novelty is predicated on the composite type endless wrist watch encircling band with the relatively wide elastic web portion provided along opposite longitudinal edges with relatively heavy elastic elements, there being an opening in the band which is expansible and contractible and which is possessed of sufficient take-up tension that it securely hugs the slightly tapered rim portion of the dome-like shell after the latter is

lined up with and pushed through the opening. As stated, the flange means does not however allow the shell to be forced through the opening and under these circumstances, the flange means provides suitable stop shoulders.

A careful consideration of the foregoing description in conjunction with the invention as illustrated in the drawings will enable the reader to obtain a clear understanding and impression of the alleged features of merit and novelty sufficient to clarify the construction of the invention as hereinafter claimed.

Minor changes in shape, size, materials or rearrangement of parts may be resorted to in actual practice so long as no departure is made from the invention as claimed.

Having described the invention, what is claimed as new is:

A guard for a wrist watch and strap carried by said wrist watch comprising a substantially rigid transparent plastic hollow shell of dome-shaped form including a convexed crown portion and outwardly and downwardly flaring marginal wall portions, said wall portions having endless outstanding flange means, and an endless wrist encircling band, said band being all elastic, yieldable both longitudinally and transversely and having a central porous web portion and relatively stout elastic longitudinal edging and reinforcing elements commensurate in length with said web portion, the elastic properties of said elements being of a greater degree of elasticity than the elasticity of said web portion, the latter being provided with an expansible and contractible opening, the dome-shaped portion of said shell protruding through and beyond said opening with the marginal edge portions of the opening yieldingly encompassing and binding against said wall portions, said flange means projecting well beyond the stated marginal edge portions of the opening and being in contact with said edging elements and adapted to be yieldingly held against the wearer's wrist by the elastic retentive action of the latter.

RICHARD H. HUCKNALL.

REFERENCES CITED

The following references are of record in the file of this patent:

UNITED STATES PATENTS

Number	Name	Date
804,493	McCarthy	Nov. 15, 1905
2,344,136	Dressen	Mar. 14, 1944

FOREIGN PATENTS

Number	Country	Date
57,178	Norway	Oct. 19, 1936
86,244	Switzerland	Jan. 3, 1921
206,869	Switzerland	Nov. 16, 1939
458,916	Germany	Apr. 25, 1928