Aug. 6, 1963 F. R. SEAVEY 3,099,957

DETONATOR SEAL

Original Filed July 2, 1956 2 Sheets-Sheet 1

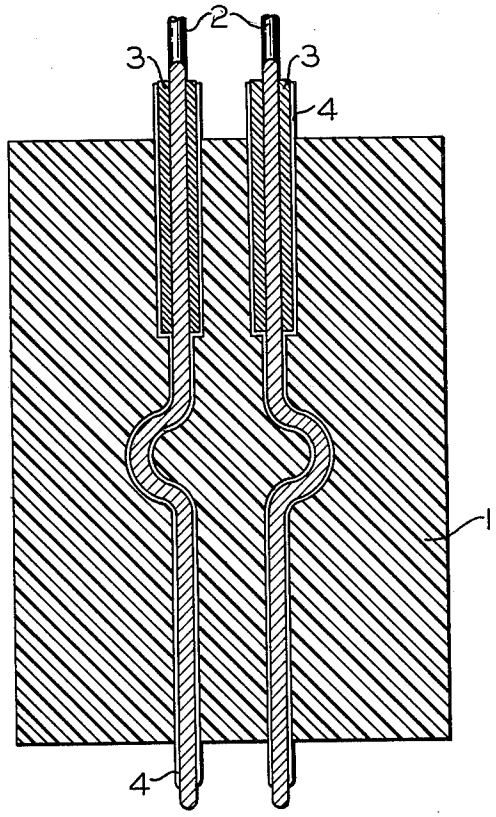

FIG. 1

INVENTOR.
FREDERICK R. SEAVEY
BY John J. Hennechke
Lionel E. Goff
ATTORNEYS

DETONATOR SEAL

Original Filed July 2, 1956 2 Sheets-Sheet 2

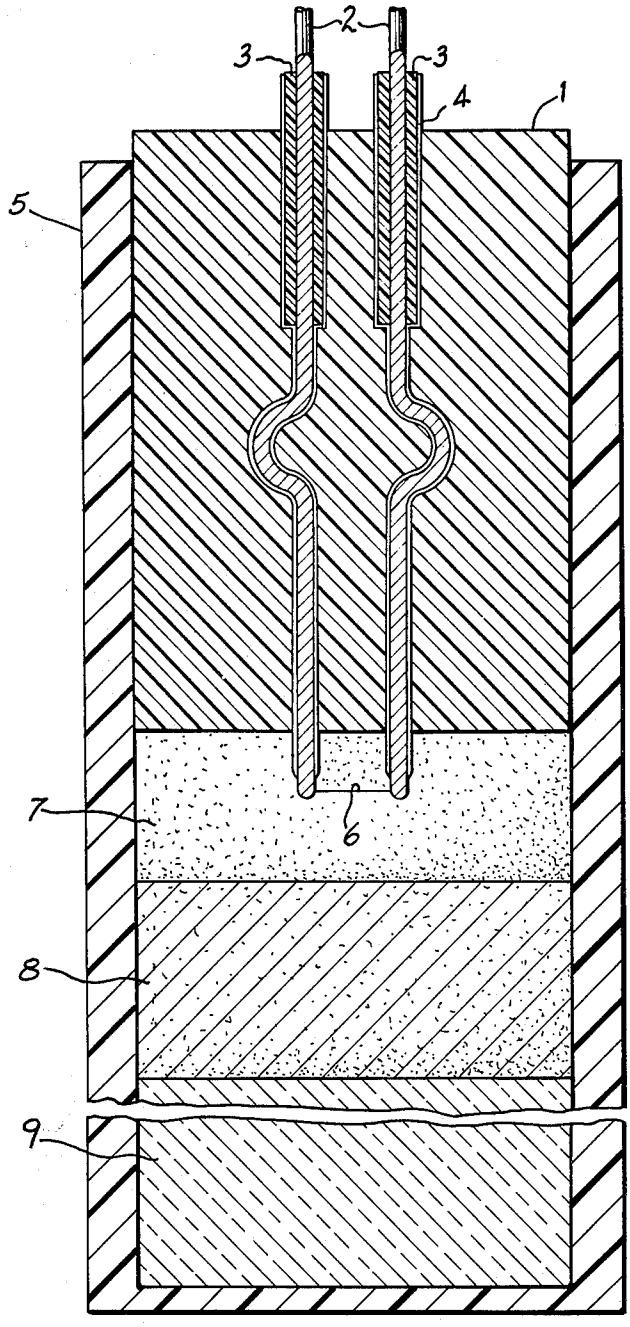

FIG. 2

INVENTOR.
FREDERICK R. SEAVEY
BY Donald R. Clements
ATTORNEY

United States Patent Office

3,099,957
Patented Aug. 6, 1963

3,099,957

DETONATOR SEAL

Frederick R. Seavey, Alton, Ill., assignor to Olin Mathieson Chemical Corporation, East Alton, Ill., a corporation of Virginia

Original application July 2, 1956, Ser. No. 595,120. Divided and this application Aug. 10, 1960, Ser. No. 48,785

1 Claim. (Cl. 102—28)

This invention relates to electric detonators, and particularly to a novel method of providing waterproof closures therefor. The present application is a division of co-pending application, Serial No. 595,120, filed July 2, 1956, now abandoned by Frederick R. Seavey.

Electric detonators heretofore have been provided with plastic bridge plugs and plastic insulated lead wires. While such an assembly offers material advantages over the more conventional sulfur-pitch closure assembly, it does possess a serious inherent weakness in the bond between the lead wires and the bridge plug. In normal molding operations small capillary channels often are formed in the plug material immediately adjacent the lead wires, and such channels permit the ingress of water when the detonator is stored under moist conditions or used in aqueous operations. This problem has been recognized in the art, and various means have been utilized in attempts to minimize the formation of these minute channels in the bond between the lead wires and the bridge plug material. This problem previously has been attacked by positioning a mutual solvent between the lead wire insulation and the bridge plug material as described in U.S. Patent No. 2,382,921, granted August 14, 1945, to Frederick R. Seavey and, also, by coating the lead wires with a waterproof casein glue as described in U.S. Patent No. 2,415,045, granted to the same inventor on January 28, 1947. Such prior art methods have a tendency to increase the water resistance of the wire to plug juncture, but they leave much to be desired and also involve cumbersome and expensive manufacturing procedures. Therefore, it is an object of this invention to provide a novel electric detonator seal and a method of manufacturing it. More specifically, it is an object of this invention to improve the bond between the lead wires and the thermoplastic bridge plug. Another object of this invention is to provide a novel means for preventing the entrance of water into an electric detonator at the juncture between the lead wires and the bridge plug.

In accordance with this invention, these and other objects are accomplished by providing thermoplastic covered detonator lead wires with a coating of a reversible hydrophilic colloid material prior to molding a bridge plug about them. This coating of colloid is most conveniently applied to the wires by dipping them in an aqueous solution or dispersion of the colloidal material. Although the lead wires may be provided with such a coating throughout their entire length, for matters of convenience and economy, it is preferred generally that this material be applied only to the terminal and stripped portions of the wires about which the bridge plug is to be molded.

Any type of reversible hydrophilic colloidal material that will expand or swell in contact with water is suitable for use in connection with this invention. Materials of this general class that have been found to be satisfactory include water soluble cellulose ethers, such as carboxymethyl cellulose and methyl cellulose and natural colloids of vegetable origin including, for example, guar flour, tragacanth and gum arabic.

Practically all of the commercially available thermoplastic materials can be used in the formulation of the bridge plug. Thus, in accordance with this invention the bridge plug can be formed of ethyl cellulose, polyvinyl

chloride, polyvinyl acetate, polyvinyl chloride-acetate copolymers, polyamides, polystyrene, polystyrene-acrylonitrile copolymers, and the like. The lead wire insulation can be prepared from the above thermoplastic materials as well as from neoprene, polyethylene, and synthetic, modified or halogenated rubbers.

In conventional practice a portion of the thermoplastic insulation is stripped from one terminal portion of a pair of lead wires and the bridge plug is molded about these wires so as to cover the end of the insulation as well as a portion of the bared wires. Normally, when a thermoplastic plug is so molded about the lead wires, small crevices or channels are formed between the wires and the bridge plug or between the lead wire insulation and the bridge plug. In accordance with this invention the deleterious effects of any such channels are overcome by positioning a film of a reversible hydrophilic colloid at the juncture of the wires and the bridge plug. This material reduces the possibility of water passing through these channels to a bare minimum. The exact manner in which such colloidal material operates to provide such an effective barrier to the passage of water or water vapor is not understood completely. It is believed, however, that water entering these channels comes in contact with the hydrophilic colloidal material, causing it to expand so as to fill the channels and to exert a great pressure over a relatively small area so as to prevent the passage of any water through the channels.

FIGURE 1 shows a sectional view of the bridge plug assembly of the electric detonator of this invention.

FIGURE 2 is a sectional view of the electric detonator of this invention.

FIGURE 1 shows a sectional view of the bridge plug assembly in which a pair of detonator lead wires 2 sheathed with ethyl cellulose insulation 3 was provided with a thin coating 4 of methyl cellulose, and a bridge plug 1 of ethyl cellulose molding composition was formed about the wires. The insulation was removed from the wires for a length of about two inches from one end thereof. Then this bared portion of the lead wires, together with about one inch of the adjacent insulated portion, was immersed in an aqueous solution of methyl cellulose, removed and permitted to dry at room temperature. The methyl cellulose solution, or dispersion, which was maintained at room temperature, was formed by dispersing 3.7 parts of methyl cellulose in 96.3 parts of water by weight. That portion of the wires coated with the film of methyl cellulose then was placed in a conventional molding fixture, and a bridge plug of ethyl cellulose molding composition was injection-molded about them.

FIGURE 2 shows the electric detonator wherein bridge plug 1 having lead wires 2 sheathed with insulation 3 and a thin coating 4 of reversible hydrophilic colloidal material is sealed to the mouth of a case 5. Sealing of bridge plug 1 to case 5 may be effected by moistening the cylindrical surface of the bridge plug 1 with a suitable solvent, for example, a solution of about 4 parts by volume of benzol and 1 part by volume of methanol and then pressing the plug into the mouth of the case. The plug becomes integrally united with the case after evaporation of the solvent, as disclosed in the aforementioned Seavey Patent No. 2,382,921.

A bridge wire 6 is attached to the uninsulated terminals of lead wires 2 by means of a welding, swaging or soldering procedure. The bridge wire is embedded in a suitable igniter charge 7 such as mercury fulminate or the like. Positioned below the igniter charge 7 is an initiator charge 8 which may be, for example, dextrinated lead azide or the like. A base charge 9 is positioned in the bottom of the case 5 below the initiator charge 8. Base charge 9 may be compressed cyclonite, tetryl, or the like.

Bridge plug assemblies prepared in this manner were

used to seal the mouths of electric detonators having ethyl cellulose housings containing explosive trains, and the completed detonators were subjected to a waterproof test. In carrying out this test, 800 detonators provided with the improved closure of this invention were submerged in water and subjected to 100 p.s.i. for 20 hours at 20° C. At the end of this period, each of the detonators was tested to determine whether any water had entered the case. Out of the 800 detonators tested, only 1 failed to pass this test. In other words, 99.9 percent of the detonators tested withstood this test, which represents more rigorous conditions than normally can be expected in the field.

By contrast, detonators which were prepared in a similar way but not provided with a coating of methyl cellulose between the bridge plug and the lead wires exhibited less satisfactory results when subjected to the same test. The percentage of such conventionally prepared detonators successfully passing the same water immersion test varied between 92 percent and 98 percent. When it is realized that the only means of determining the effectiveness of such a seal is by utilizing destructive testing methods, it will be readily appreciated that anyone using the conventionally prepared detonators has no assurance whatsoever that the detonator can be used in moist or sub-aqueous operations. Other detonators differing from those of this invention only in that the lead wires were coated with a hydrophobic colloid, such as polyvinyl acetate, were prepared. This group of detonators exhibited none of the superior qualities of the detonators of this invention. In fact, the tendency of the detonators to leak was increased by the treatment of the lead wires with polyvinyl acetate, and less than 50 percent of such detonators passed the test described above. In one group of 16 detonators tested there were 9 failures, and in another group of 15 tested there were 12 failures. Thus, it is clear that the seal between the bridge plug and lead wires is more positive when the lead wires are treated with a reversible hydrophilic colloid than when they are untreated or treated with a hydrophobic colloidal material.

While the above example is directed specifically to an electric detonator having a bridge plug and lead wire insulation, both formed of ethyl cellulose, it is to be understood that this invention is not limited to this specific material but that it is applicable equally to bridge assemblies formed of any other thermoplastic material. Also, in the above example, reference was made to a detonator provided with an ethyl cellulose housing. The invention is equally efficacious when used in connection with detonator cases formed of any suitable material, such as other thermoplastics, aluminum, stainless steel, gilding metal, and the like. Furthermore, it is distinctly understood that the electric detonators made in accordance with this invention can contain any suitable explosive, initiating or deflagrating charges.

Having thus described the invention, what is claimed is:

An electric detonator comprising a case containing an explosive train and a thermoplastic bridge plug molded about a pair of lead wires and sealing the mouth of the case, said lead wires extending through said bridge plug into said explosive train, said lead wires being provided with plastic insulation terminating within the bridge plug and a coating consisting of a reversible hydrophilic colloidal material coating the portion of said lead wires and said plastic insulation extending through said bridge plug, said reversible hydrophilic colloidal material being capable of expanding when contacted with water.

References Cited in the file of this patent

UNITED STATES PATENTS

2,329,148	Gerrit	Sept. 7, 1943
2,382,921	Seavey	Aug. 14, 1945
2,415,045	Seavey	Jan. 28, 1947
2,420,721	Pennella	May 20, 1947
2,591,625	Simonsson	Apr. 1, 1952
2,960,933	Scherrer	Nov. 22, 1960