May 21, 1929. D. K. JETTE 1,714,170

FLYING MACHINE

Filed March 11, 1926

Fig. 1.

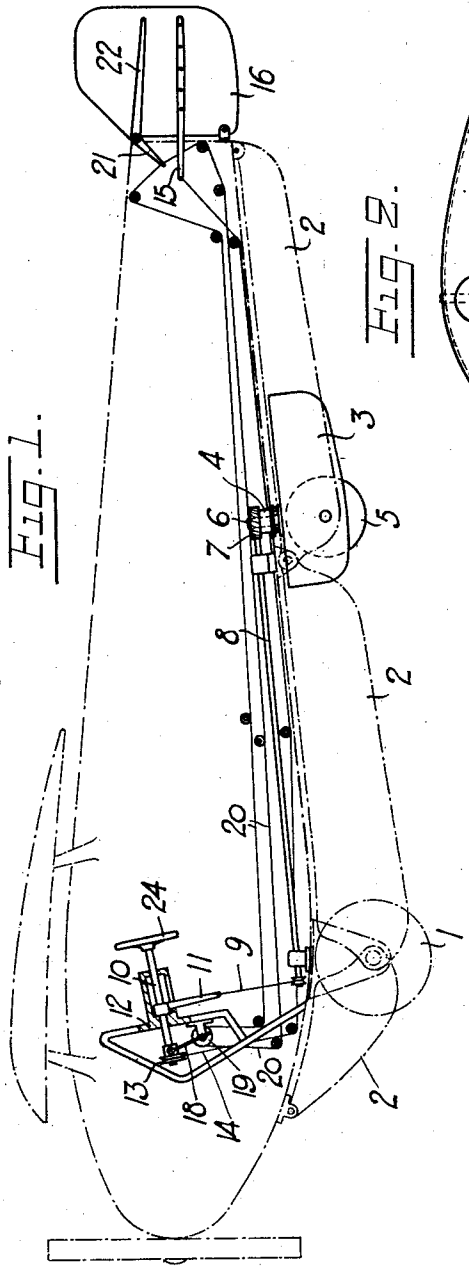


Fig. 2.

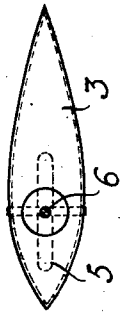


Fig. 3.

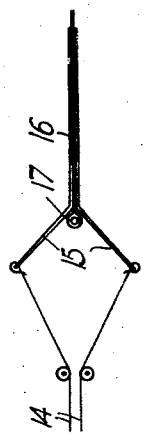


Fig. 5.

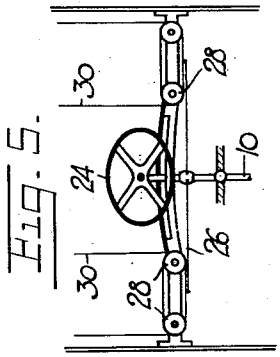


Fig. 4.

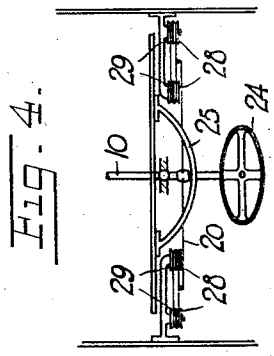


Inventor

David K. Jette.

By Henry Orth & Co Atty.

Patented May 21, 1929. 1,714,170

# UNITED STATES PATENT OFFICE.

DAVID KLINGBERG JETTE, OF MIDSKOG, SWEDEN.

## FLYING MACHINE.

Application filed March 11, 1926, Serial No. 93,987, and in Sweden February 24, 1925.

My invention relates to flying machines and more particularly to that class known as hydro aeroplanes and my object is to provide means for steering the machine when running on the ground or on the sea, and further to provide a handy mechanism for operating said steering means in flight as well as with the machine running on the ground or on the sea.

The invention will be described hereinbelow in connection with flying machines having on the under side of their fusilage a swingably mounted rudder adapted to act in the running of the flying machine on the sea and having further a supporting and steering wheel combined with said rudder adapted to steer the machine when running on the ground. The invention is characterised, chiefly, by the fact that a mechanism to operate the water rudder carrying the supporting wheel is combined with the mechanism for operating the usual vertical air rudder of the flying machine.

In the drawing, Fig. 1 is a diagrammatic side elevation, with part in section, of a flying machine in which means embodying the invention are provided. Fig. 2 is a top plan view of the water rudder with the supporting wheel carried thereby. Fig. 3 is a detail view of the mechanism to operate the vertical air rudder. Fig. 4 is a plan view and Fig. 5 is a front view of a modified form of the mounting of the hand-wheel of the controlling mechanism.

The drawing illustrates, by way of example, a flying machine having a pair of front supporting wheels 1 and pontoons 2 to enable running of the machine both on the ground and on the sea. Provided in the middle of the machine at an appropriate distance behind the front supporting wheels 1 is a rudder 3 pivoted to the under side of the bottom of the fusilage 1 by means of a shaft 6 extending through the bottom of the fusilage and through suitable bearings 4. The rudder 3 is preferably stream-lined. Loosely mounted within an opening in said rudder is a supporting wheel 5. Carried by the shaft 6 above the upper bearing 4 is a worm-wheel 7 meshing with a worm formed on a horizontal shaft 8 connected, as by a rope transmission 9, to arms 11 attached to the operating shaft 10, one such arm only being shown on the drawing.

The operating shaft 10 is rotatably and slidably mounted in a framework 12 and carries in addition to the arms 11 a rope wheel or sprocket wheel 13 and a hand-wheel 24. The wheel 13 is connected by a rope transmission 14 (see also Fig. 3) to transversely extending arms 15 of the vertical air rudder 16 pivoted to the fusilage at 17.

Rotatably mounted on the shaft 10 is a non-sliding fork 18 attached at its opposite end to a rotatably mounted rope wheel 19 connected by a rope 20 to a forwardly projecting arm 21 of the horizontal rudder 22.

Upon rotation of the hand-wheel 24 in either direction the rudder 3 with the wheel 5 as well as the rudder 16 will be moved by the connections described, the arrangement being such that the rudders 3 and 16 will move in the same direction. Whether the machine is traveling in the air, on the ground, or on the sea, it is only necessary in order to effect side steering that the pilot operates the hand-wheel 24. If the hand-wheel 24 with the shaft 10 is pushed forwardly or rearwardly, that is, from or towards the pilot, respectively, the horizontal rudder 22 will be turned downwardly or upwardly, respectively.

In Figs. 4 and 5 I have shown a modified form of the mounting of the operating or control shaft 10 in which said shaft 10 is not only rotatable and slidable but also capable of transverse swinging movement. To this effect any appropriate mounting arrangement may be used, provided it permits said three movements, as, for instance, a rotatably mounted spherical journal, through which the shaft slidably extends. A guiding arc 25 may, preferably, be provided to guide the shaft in its transverse swinging movements. The swinging movement of the shaft 10 may be used to hold the flying machine in equilibrium or balance inasmuch as the shaft is connected by ropes 26 to endless ropes or the like carried by disks 28, rope wheels 29 rigidly connected to the disks 28 being provided to guide and move ropes 30 connected to the balancing planes of the flying machine.

It is thus seen that all movements as required to balance the flying machine as well as to steer it in the air or on the ground or sea may be operated by means of a common hand-wheel.

What I claim is:

1. In a flying machine of the hydro aeroplane type, a body, a vertical air rudder pivoted thereon, a stream-lined water rudder

pivoted on the under side of said body, a ground wheel mounted in and movable with the water rudder and projecting slightly below the latter, a horizontal elevating rudder pivoted on said body, control members connected with said rudders, a rotary and axially movable operating shaft, actuating means operable by the rotation of the shaft for operating the control members connected with the vertical and water rudders, and actuating means operable by the axial movement of the shaft for operating the control members connected with the horizontal rudder.

2. In a flying machine of the hydro aeroplane type, a body, a vertical air rudder pivoted thereon, a stream-lined water rudder pivoted on the underside of said body, a ground wheel mounted in and movable with the water rudder and projecting slightly below the latter, a horizontal elevating rudder pivoted on said body, control members connected with said rudders, a rotary and axially movable operating shaft, actuating means operable by the rotation of the shaft for operating the control members connected with the vertical and water rudders, actuating means operable by the axial movement of the shaft for operating the control members connected with the horizontal rudder and a hand wheel on the shaft for rotating and moving the same axially.

3. In a flying machine of the character described, a body, a vertical air rudder pivoted thereon, a water rudder on the underside of said body, a shaft pivotally connecting the water rudder to said body, a worm wheel on the shaft, a horizontal worm-shaft meshing with said wheel, a rotary and axially movable operating shaft, a rope transmission operable by the rotation of the operating shaft for rotating the worm shaft, a pulley fixed on the operating shaft, a rope transmission operatively connecting the pulley and air-rudder for swinging the latter, a horizontal air rudder pivoted on the body, a flexible actuating member operatively connected with the horizontal rudder, a wheel for moving the flexible member, and means operable by the axial movement of the operating shaft to rotate said wheel thereby swinging the horizontal rudder.

4. In a flying machine of the hydro aeroplane type, a body, a vertical air rudder, a stream-lined water rudder on the underside of said body, a ground wheel mounted in said water rudder to be enclosed therein except for its lowermost portion so as to serve as steering wheel in the movement of the aeroplane on the ground, a common controlling mechanism for said rudders, including a rotatable and slidable shaft with a hand-wheel, the rotation of which moves said rudders in synchronism, an elevating rudder, and connections between said elevating rudder and said shaft to permit controlling said elevating rudder by moving said hand-wheel forwardly and rearwardly.

In testimony whereof I have signed my name.

DAVID KLINGBERG JETTE.