Dec. 23, 1952 D. FINLAYSON ET AL 2,622,961

GASEOUS TREATMENT OF FILAMENTARY TEXTILE MATERIAL AT SUPERSONIC AND SUBSONIC GAS VELOCITIES AND APPARATUS THEREFOR

Filed April 17, 1948 3 Sheets-Sheet 1

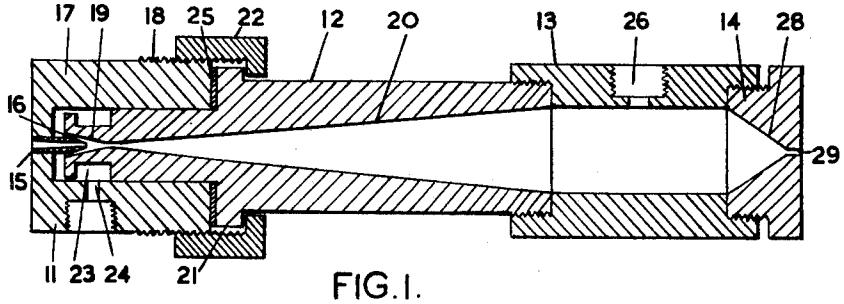

FIG. 1.

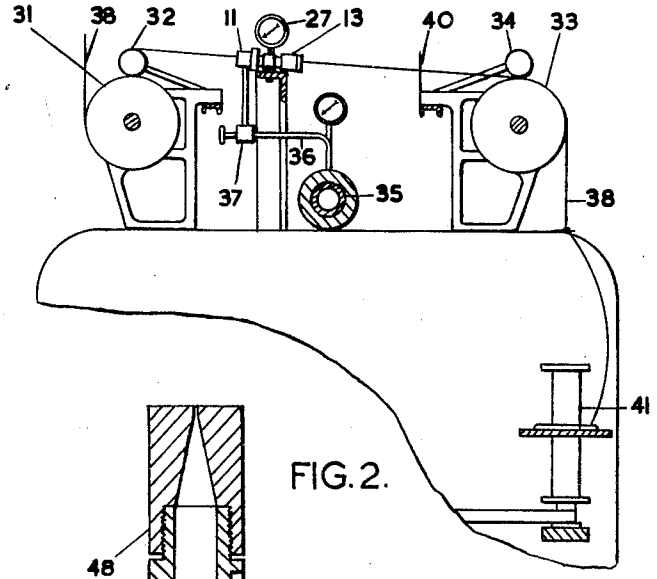

FIG. 2.

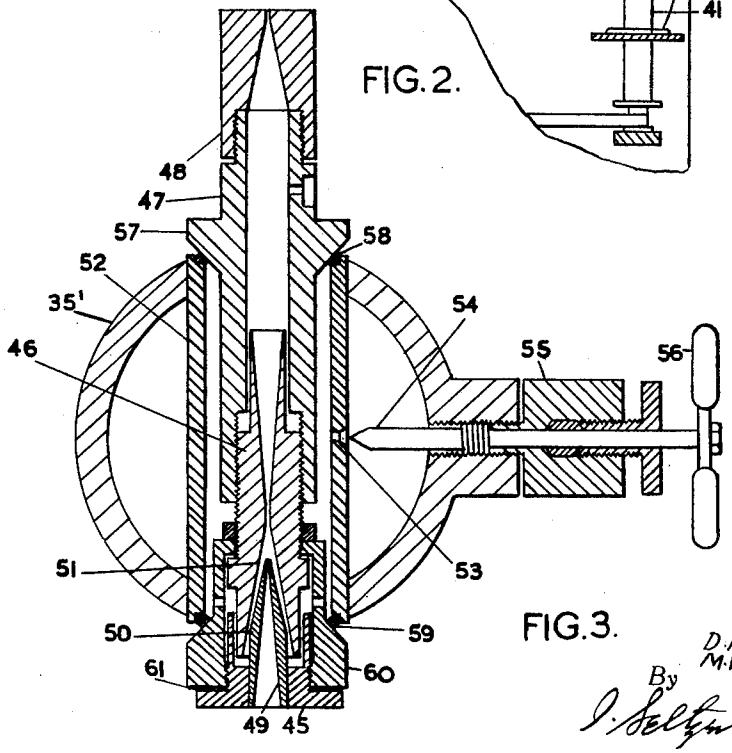

FIG. 3.

Inventors
D. FINLAYSON
M. W. ALFORD
By
I. Seltzer & C. Levinson
Attorneys

Dec. 23, 1952 D. FINLAYSON ET AL 2,622,961

GASEOUS TREATMENT OF FILAMENTARY TEXTILE MATERIAL AT SUPERSONIC AND SUBSONIC GAS VELOCITIES AND APPARATUS THEREFOR

Filed April 17, 1948 3 Sheets-Sheet 2

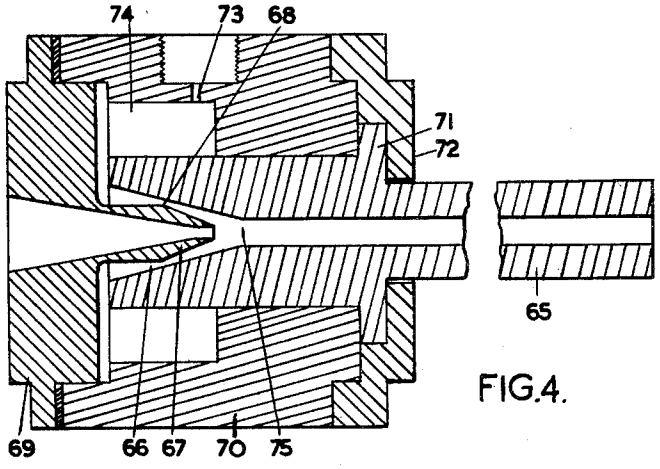

FIG.4.

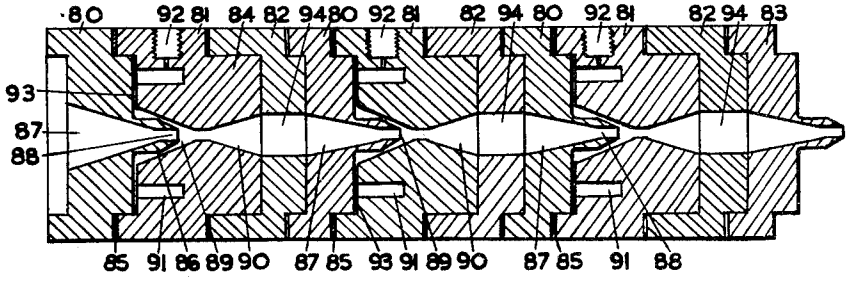

FIG.5.

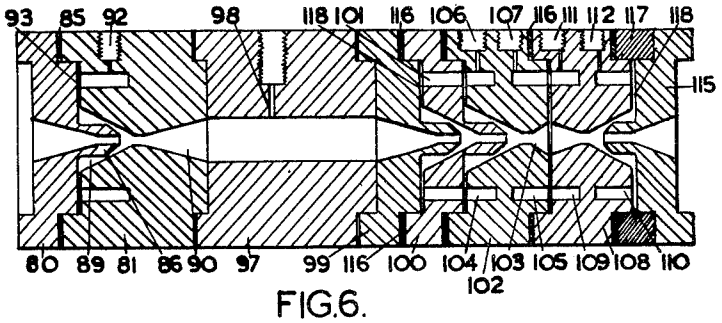

FIG.6.

Inventors
D. FINLAYSON
M. W. ALFORD
By
Attorneys

Dec. 23, 1952 D. FINLAYSON ET AL 2,622,961

GASEOUS TREATMENT OF FILAMENTARY TEXTILE MATERIAL AT SUPERSONIC AND SUBSONIC GAS VELOCITIES AND APPARATUS THEREFOR

Filed April 17, 1948 3 Sheets-Sheet 3

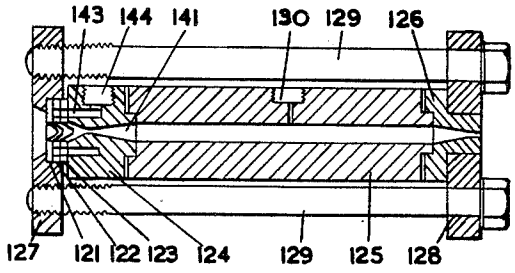

FIG. 7.

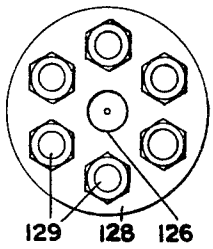

FIG. 8.

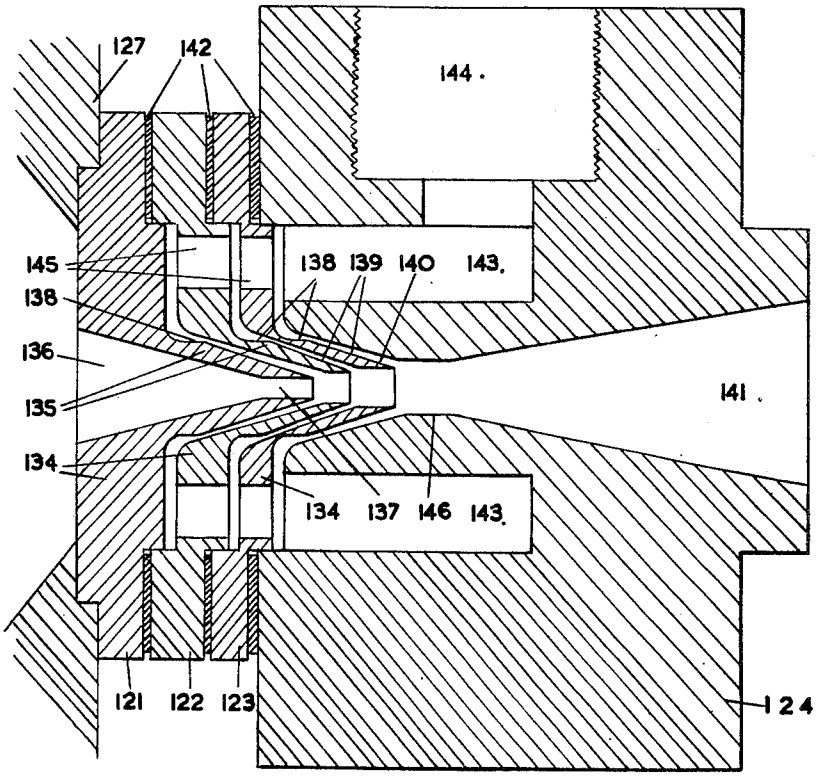

FIG. 9.

Inventors
D. FINLAYSON
M. W. ALFORD
By
Attorneys

Patented Dec. 23, 1952

2,622,961

UNITED STATES PATENT OFFICE

2,622,961

GASEOUS TREATMENT OF FILAMENTARY TEXTILE MATERIAL AT SUPERSONIC AND SUBSONIC GAS VELOCITIES AND APPARATUS THEREFOR

Donald Finlayson and Maitland Walton Alford, Spondon, near Derby, England, assignors to Celanese Corporation of America, a corporation of Delaware

Application April 17, 1948, Serial No. 21,688

18 Claims. (Cl. 8—149.3)

1

This invention relates to the treament of yarn and like materials with fluids, and particularly to processes and apparatus for the treatment of yarns and the like with gaseous fluids under pressure (i. e. superatmospheric pressure) during the travel of the yarns from one point to another. A particular example of such a treatment, with which the present invention is particularly but not exclusively concerned, is the stretching of yarns in the presence of wet steam under pressure, as is described in U. S. Patent No. 2,142,722.

It is an object of the present invention to make use, in such processes and apparatus, of the properties of a gaseous fluid flowing through a passage under pressure which enable the fluid, by a suitable configuration of the passage through which it is flowing, and particularly by causing the passage to increase in cross-sectional area at an appropriate point in its length, to be brought at the expense of its pressure energy to a velocity exceeding the acoustic velocity of the fluid, and to be caused thereafter to rise in pressure at the expense of the kinetic energy due to its velocity. It has been found that a travelling yarn or like material can be introduced into a gaseous fluid behaving in this manner at a point where its velocity is super-acoustic and its pressure is low, and can be caused to travel with the fluid through that part of the passage in which the velocity is reduced and the pressure raised, whereby the material is subjected to the action of the gaseous fluid under pressure. This has been found possible, moreover, not withstanding the limitations of design imposed on the configuration of the passage by the necessity of arranging for the introduction of yarn or like material into the passage. Amongst the advantages to be gained in this way are a greater simplicity in the design of units of apparatus employed for yarn treatment, the rendering of such units self-threading both at the input and output ends thereof at the beginning of treatment, and a considerable economy in the amount of gaseous fluid expended in the course of treatment.

According to the present invention, therefore, a process for the treatment of yarns and like materials with a gaseous fluid under pressure comprises supplying the fluid to a passage having a diverging part at a rate sufficiently high for expansion of the fluid as it passes along said diverging part to give rise to an increase in the velocity of the fluid, introducing the yarn or like material into the fluid in the neighbourhood of the point of maximum cross-section of said diverging part and causing the material to travel

2

with the fluid along a part of said passage that diminishes in cross-section beyond said point, in which part the velocity of the fluid falls and its pressure rises so that the material is subjected to the action of the fluid under the increased pressure thereof. In order to make the pressure of the fluid rise (and its velocity fall) beyond the point where the material enters, the passage is caused to converge for some distance beyond that point, the high rate of flow of the fluid, which caused its velocity to increase in passing along a diverging part, now causing its velocity to diminish while it is passing through a converging part, with a consequent rise of pressure.

Thereafter, the velocity having fallen to a certain value, the passage may diverge again to secure a further fall of velocity and rise of pressure, the increased pressure obtained in this way being maintained by providing a constricted outlet orifice from which the gaseous fluid and the material can emerge together at atmospheric pressure. The outlet orifice is preferably led into by a smooth convergence of the walls of the passage, preceding which the passage may be of constant cross-section for some distance over which the pressure and velocity of the fluid remain substantially constant and the material is subjected to the action of the fluid at the maximum pressure recovered thereby in the passage. Where the pressure attained by the convergence of the passage immediately beyond the point where the material enters it is sufficient for the purpose of treating the material in the desired manner, the convergence may lead into a narrow tube or capillary in which the pressure so recovered falls away gradually by friction, the material passing along said capillary and being subjected to the increased pressure attained.

By carrying out the treatment of a yarn in the manner described above, the flow of gaseous fluid through the yarn inlet in a direction opposite to the direction of travel of the yarn is prevented or reduced to negligible proportions, while the rapid flow of fluid at the point where the yarn first enters serves to draw the yarn forward into the inlet, against the action of such counterflow if any. On the other hand, after the yarn has entered the fluid stream, the recovery of the pressure of the fluid arising from the reduction of its velocity enables the yarn to be subjected to the action of the fluid under pressure in the desired manner.

It is generally convenient that the diverging part of the passage for the gaseous fluid should be entered by way of a convergent throat, to

which the fluid is supplied under high pressure and with a negligibly small velocity. The convergence of the entry to the diverging passage, however, may be effected in a very short distance and may appear as a mere rounding off or streamlining of the entry. In the converging entry the velocity of the gaseous fluid increases and its pressure drops, but the amount of pressure drop obtainable in such a converging passage is limited, for which reason a further pressure drop can only be obtained by the divergence of the passage into which the gaseous fluid is then led. Similarly, for the recovery of the pressure after the gaseous fluid has reached the end of the diverging passage, the passage converges again until the pressure has risen and the velocity fallen to a certain point, after which a further divergence of the passage is required to give a further decrease in velocity and rise in pressure. It appears that, with such an arrangement the gaseous fluid at the throat of the entry to the first diverging part of the passage attains a velocity equal to that of sound in the fluid in the condition obtaining in the throat and at higher velocities a divergence and not a convergence of the passage is required to increase the velocity further and to reduce the pressure. Conversely, when the fluid has attained a speed above the speed of sound a reduction of velocity and an increase of pressure are brought about by a convergence of the passage up to the point at which the speed is reduced to the speed of sound. Beyond that point a further divergence reduces the speed and increases the pressure.

As will appear from the above discussion a unit of apparatus suitable for the treatment of yarn and like material with a gaseous medium under pressure in accordance with the invention comprises a member having a passage therein for the flow of gaseous fluid, which passage comprises an entry throat for the fluid supplied under pressure, a divergence beyond said entry throat to enable the fluid to increase in velocity while expanding, and then a convergence to enable the fluid to increase in pressure while losing velocity, after which the passage may diverge again to give a further fall of velocity and increase in pressure. Thereafter the passage may remain parallel for a short distance, and then converge to the outlet from the member. A further passage is provided for the introduction of the yarn or like material to be treated into the stream of gaseous fluid at a point in the first passage near where the first divergence thereof changes to a convergence. In this neighborhood the fluid flows at its maximum velocity, and minimum pressure. It is preferable that the entry throat for the fluid should be rounded to constitute a converging throat.

The passage for the flow of gaseous fluid can be made of circular cross-section throughout its length and, for the purpose of introducing the yarn or like material, a suitably shaped tube may be provided, co-axial with the fluid passage, the fluid passage up to the end of the tube being annular in form and its inner wall being constituted by the outer wall of the tube. Conveniently the outer wall of the annular passage can converge along the whole length of the central tube, the effective divergence of the passage, regarded as a passage for fluid, being brought about by shaping the outer wall of the central tube to a much blunter angle than the outer wall of the annular passage. The convergence of the outer wall of the annular passage continues beyond the end of the tube so as to constitute the converging part of the passage in which the gaseous fluid loses velocity and gains pressure.

The fluid passage need not be of circular cross-section, however, but may for example be of rectangular section. Thus, the member in which the passage is formed can be of sandwich construction, having two flat side plates clamped one on each side of a thin metal plate that is divided in two from one end (the outlet end) to, or almost to, the other by a carefully profiled slit constituting the passage, the width of the slit being varied to give the passage the requisite convergences and divergences. The fluid may enter the inlet end of the passage through holes formed in the side plates, and the yarn may also be introduced through one of the side plates by an obliquely bored hole reaching the fluid passage at the appropriate point. Alternatively however, the slit at the inlet end may be formed with three branches, the middle branch extending to the edge of the plate for the entry of the yarn and the other two being provided for the flow of fluid introduced through the side plates.

It is a particular advantage of the invention that the devices described above can readily be made self-threading, not only by the sucking of an end yarn into the inlet of the device but also by its ejection through the outlet thereof. For this purpose, if the pressure of the medium with which the yarn is to be treated is high, it may be necessary to reduce said pressure, by reducing the pressure at which the fluid is supplied in the first instance. Once threading is effected the pressure of the supply can be raised until the pressure to which the yarn is subjected has reached the desired value. Alternatively, threading can be effected by stiffening the end of the yarn for a short distance and pushing it into the inlet, after which the flow of fluid is sufficient, in appropriate circumstances, to carry the yarn through the device and out through the outlet.

The invention presents considerable advantages over that described in U. S. Patent No. 2,450,045 and U. S. Patent No. 2,425,037, which, like the present invention, is concerned with the treatment of yarns and like materials with gaseous fluids under pressure and is of chief importance in connection with the stretching of artificial yarns having a basis of an organic derivative of cellulose in the presence of saturated or wet steam serving as a softening agent for the substance of the yarn. In U. S. Patent No. 2,450,045 and U. S. Patent No. 2,425,037 yarns and like materials are treated with a gaseous fluid during their passage through a substantially closed chamber, the yarn entering the chamber through an inlet forming part of an injector and the gaseous fluid also being introduced into the chamber through said injector. In the use of the arrangement described in U. S. Patent No. 2,450,045 and U. S. Patent No. 2,425,037 for this purpose, it is necessary, in order to avoid the flow of steam through the yarn inlet of the device, to supply through said inlet water under a pressure slightly greater than that of the steam in the stretching chamber. In the present invention, however, the pressure of the steam at the point where the yarn enters it is very much lower than the pressure of the steam to which the yarn is subsequently subjected and it is an important advantage of the present invention that the provision of a supply of water under pressure at the yarn inlet is rendered unnecessary. Again, for the purpose of threading up

the apparatus described in the prior patent, compressed air is temporarily supplied through the injector instead of steam, the compressed air inducing a flow of air through the yarn inlet by means of which an end of yarn can be carried into said inlet. In the present case this function can be fulfilled by the steam used in the treatment of the yarn and the provision of a separate supply of compressed air and of the necessary valves and control gear for using such compressed air in alternation with steam are unnecessary. Furthermore, by avoiding the use of water supplied to the inlet of the device the condensation of the steam by such water is avoided and a very great economy is thereby effected in the quantity of steam employed.

While, as mentioned above, the invention is of particular importance for the purpose of stretching yarns made of an organic derivative of cellulose in wet or saturated steam, its value is not confined to such an operation. It may be employed, for example, in stretching yarns and other materials, e. g. ribbons, having a basis of other substances and particularly thermoplastic substances, e. g. polyamides or polyvinyl compounds. The invention is, moreover, not confined to stretching operations, but extends to any treatment of materials with gaseous fluids under pressure carried out during the passage of the materials through a substantially closed treating chamber. Furthermore, the steps of the process according to the invention may be carried out repeatedly upon the same material while it is travelling from one point to another. For example, two or more units of apparatus of the kind described above may be employed in series or built up into a single unit adapted to perform the function of several such units as are described above. Or again, a unit of the kind may be caused to act in opposition to one or more other units on the same travelling yarn. Yet again, parts of the unit may be reduplicated, as by the provision of two or more fluid passages meeting at or near the point of entry of the yarn.

By way of example several forms of unit of apparatus in accordance with the invention that are suitable for the stretching of yarn with wet steam under pressure, and the mode of employment of such units, will now be described in greater detail with reference to the accompanying drawings in which,

Fig. 1 is a sectional side elevation of a simple form of unit, in which steam reaching super-acoustic velocity is used,

Fig. 2 is a side elevation partly in section of apparatus for the stretching of yarns in which the unit shown in Fig. 1 is embodied,

Fig. 3 is a section similar to Fig. 1 of another form of unit similar in function to that in Fig. 1,

Fig. 4 is a diagrammatic sectional view of a third form of unit,

Figs. 5 and 6 are diagrammatic sectional views each showing a plurality of units used in combination,

Fig. 7 is a view similar to Fig. 1 of yet another form of unit, having a multiple inlet orifice,

Fig. 8 is a view of the outlet end of the unit shown in Fig. 7, and

Fig. 9 shows a detail on a larger scale of the unit shown in Fig. 7.

The unit shown in Fig. 1 comprises four main parts, namely a yarn input section 11, a combining tube 12, a parallel tube 13 and a yarn output section 14. The yarn input section 11 comprises a short hollow needle 15, the end or point of which is conical so as to present a shoulder 16. The needle 15 is set in the centre of a cup 17 which is externally screw threaded at 18.

The combining tube 12 has a bore which converges at 19 over a short part of its length and then diverses at 20 for the remainder of its length. It is provided with an external flange 21 enabling it to be secured by an internally flanged nut 22 to the cup 17, and is formed with a deep groove 23 extending round it in register with a steam supply passage 24 formed in the wall of the cup 17. The needle 15 is located in the converging part 19 of the core of the tube 12 so that the shoulder 16 is just inside the bore while the tip of the needle, and indeed the apex of the cone into which the tip is formed, lies short of the end of the converging part 19. The relative positions of the needle 15 and tube 12 are adjustable by the provision of a shim 25 of the required thickness between the flange 21 and the edge of the cup 17. The end of the needle 15 tapers more quickly than the convergence 19 so that the annular space between the two forms a passage which, after diminishing in cross-sectional area as far as the shoulder 16 then increases in area as far as the tip of the needle.

The parallel tube 13 is simply a short cylinder screwed on the outside of the end of a combining tube 12 and provided on one side with a threaded aperture 26 for the fitting of a pressure gauge 27 (Fig. 2). The yarn output section 14 screws into the end of the parallel tube 13 and has a bore which converges at 28 from the diameter of the parallel tube 13 to that of the yarn outlet 29, which is substantially equal to the diameter of the yarn entry orifice at the tip of the needle 15.

In the operation of the device described above steam enters under pressure through the steam passage 24 in the side of the cup 17, into the annular groove 23, and passes round the end of the combining tube 12 to the space surrounding the needle 15. The steam then flows into the passage between the needle and the inner wall of the converging part 19, which passage diminishes in cross-section for a short distance until it reaches the throat of said passage, at the shoulder 16 of the needle 15. The passage then increases gradually in sectional area until the tip of the needle is reached, at which point the area increases suddenly. The passage then continues as a converging passage, free from the restriction of the yarn input needle, until the throat of the combining tube is reached. Thereafter the passage increases in size until the parallel tube is reached, the diameter of which is constant until the converging yarn outlet nozzle is reached. The apparatus is so designed that the pressure of steam entering the device diminishes from the point of entry to the enlargement just beyond the tip of the yarn input needle 15, the velocity of the steam increasing throughout this time, after which the pressure rises again until the parallel tube is reached, the velocity diminishing as the pressure increases. In the parallel tube the pressure and velocity are steady and in the yarn output nozzle the pressure diminishes while the velocity increases.

In use, the unit is disposed, as shown in Fig. 2, between a pair of feed rollers 31, 32 and a pair of draw-off rollers 33, 34, and is connected to a steam header 35 supplying wet or saturated steam by means of a pipe 36 through a needle valve 37. The rollers 31, 33 are driven with different pe-

ripheral speeds, the roller 33 being driven at 2, 5, 10 or more times the speed of the roller 31 according to the degree of stretch required. Yarn 38 supplied to the apparatus passes under the roller 31 and over the roller 32. Steam is turned on by means of the valve 37 and its flow is adjusted so as to give a flow of air inwards through the hollow needle 15. The end of the yarn 38 is then presented to the yarn input section 11 and is sucked in, drawn through the device and ejected from the yarn outlet 29. The yarn is then passed through a slotted steam-deflector plate 40 and over the draw-off roller 33, and is then thrown-on to a ring-spinning device 41 by means of which the yarn is taken up as fast as it is received. If the steam pressure now being applied is sufficient for the yarn 38 to be softened and stretched to the desired degree, the roller 34 is lowered on to the roller 33 so as to permit the exact degree of stretching to be determined by the rollers 33, 34. If not, the roller 33 slips past the yarn proceeding to the ring-spinning device 41 until the steam pressure, as indicated by the gauge 27, is raised by means of the valve 37 to stretching pressure. This enables the desired degree of stretch to take place, and the roller 34 is then lowered on to the roller 33 so that the degree of stretch is exactly determined. Although the pressure at the tip of the needle 15 may thereby be raised above atmospheric pressure, the yarn 38 continues to be drawn into and through the unit by the velocity of the steam, and to be stretched in the course of its passage.

The steam supplied to the header 35 is preferably drawn from a supply adapted to deliver steam of constant and adjustable quality, for which purpose it may be desirable to provide a special boiler rather than to draw steam from ordinary steam mains in which the quality is liable to vary according to the steam demand for other purposes. Or again, steam from a main or from a separate boiler may be specially treated to bring it to a desired quality, e. g. by drying and superheating it to a known degree, and then expanding it by a known amount. The unit shown in Fig. 1, as also the several units described hereafter, are made throughout of Phosphor bronze, stainless steel or other suitable material.

The unit shown in Fig. 3 is similar in principle to that of Fig. 1, comprising a yarn input section 45, combining tube 46, parallel tube 47 and yarn output section 48. In this device the yarn input needle 49 is tapered over its whole length, but tapers more rapidly above the shoulder 50 than below, the degree of taper of the converging part 51 of the combining tube 46 being intermediate between those of the two parts of the needle 49 so as to produce the desired effect as in Fig. 1. The device shown in Fig. 3 differs principally from that shown in Fig. 1, however, in that the major part of it is contained within the steam header 35'. For this purpose a stainless steel tube 52 is welded into the header 35' and is provided with a countersunk hole 53 constituting a seating for a valve needle 54 passing through a gland 55 and operated by a hand-wheel 56. The parallel tube 47 is provided with a coned flange 57 engaging with a copper ring 58 at one end of the tube 52 while at the other end a copper ring 59 is engaged by shouldered member 60 screwed on to the combining tube 46. The yarn input section 45 screws into the member 60, and the needle 49 is located with reference to the convergent part 51 of the bore of the combining tube 46 by shims 61. A series of units of the kind described in Fig. 3 can thus be employed along the length of the steam header 35' in the apparatus described in Fig. 2, and, by closing the valve 53, 54 any one unit can be removed from the steam header without interference with the others. The unit is employed in the manner already described in Fig. 2 with reference to the form of unit shown in Fig. 1, the valve 53, 54 serving in place of the valve 37.

The forms of unit described with reference to Figs. 1 and 3 are designed so that the steam, in passing along the combining tube 12 or 46, should lose in pressure and gain in velocity while passing along the length of the needle 15 or 49 and should then recover its pressure, at the expense of its velocity, in the remainder of the converging part of the combining tube and also in the diverging part thereof. The form of unit shown in Fig. 4 is designed for use, in the apparatus shown in Fig. 2, when the recovery of pressure in the converging part alone of the combining tube is sufficient for stretching purposes. In Fig. 4 the combining tube is in the form of a long capillary 65 having a converging entry 66 into which a yarn input nozzle 67 enters. The yarn input nozzle 67, as in Fig. 1, has a parallel portion and a tapered tip, the shoulder 68 formed between them entering into the convergent entry 66 of the combining tube 65. The member 69 of which the yarn input nozzle 67 forms a part fits into a cylindrical member 70 through the other end of which the base of the combining tube 65 passes, the latter being located with reference to the cylinder 70 by a flange 71, and secured by a ring 72. High pressure steam enters the member 70 through the steam passage 73 communicating with an annular space 74 between the base of the combining tube 65 and the wall of the cylindrical member 70. From the space 74 the steam enters the annular passage between the cylindrical part of the yarn input nozzle 67 and the flared entry 66 of the combining tube 65, which passage diminishes in area as far as the shoulder 68. From the shoulder 68 to the tip of the nozzle 67 and immediately beyond the tip the area of the passage increases, the steam flowing along this part of the passage with an increasing velocity exceeding the acoustic velocity attained in the neighbourhood of the shoulder 68. Just beyond the tip of the nozzle 67 the pressure is at a minimum and the velocity at a maximum, but from this point to the point 75 the convergence of the passage causes the velocity of the steam to fall and its pressure to rise to a value sufficient to bring about softening of the yarn. As the steam passes along the capillary part of the combining tube 65 its velocity is reduced by friction but its pressure is maintained at a sufficient value and for a sufficient period to effect the desired softening of the yarn.

Fig. 5 is a diagrammatic sectional view of a plurality of stretching units of a kind designed to be used in series and to be built up as a single device adapted to be employed in the apparatus shown in Fig. 2 in place of the unit described with reference to Fig. 1. In Fig. 5 each unit, of which there are three, involves four parts, namely an input section 80, a combining tube section 81, a parallel tube section 82 and an output section constituted by the input section 80 of the next unit. An additional section 83, identical in form with the input section 80, is provided to serve as the output section of the last unit. Each section is in the form of a cylindrical block having a coaxial cylindrical projection on one face, as at 84 and a recess on the other face, of diameter

equal to that of said projection and of a depth approximately equal to that of the projection on the next preceding section. By these means the several sections constituting the device fit together in the manner clearly shown in Fig. 5 and may be secured by any convenient means, e. g. by end-rings and clamping bolts in the manner later to be described with reference to Figs. 7 and 8. Shims 85 are provided between the sections 80, 81 for adjusting the relative axial positions of the sections.

Each input section 80 comprises an input nozzle 86 projecting from one face, similar in shape to that described with reference to Fig. 4, i. e. provided with a parallel portion and a rapidly tapered tip. The section 80 has a convergently tapered bore 87 leading into a short parallel portion 88 of a diameter suitable for the passage of a yarn. Each combining tube section 81 has a convergent/divergent bore 89, 90, the nozzle 86 entering into the convergent part 89 of said bore to an extent determined by the thickness of the shim 85 between the sections 80 and 81. An annular chamber 91 in the section 81 is fed with steam through a steam passage 92 and communicates with a flat space 93 between the projection on the face of the section 80 and the bottom of the recess in the adjacent face of the section 81. The flat space 93 communicates with the annular passage between the nozzle 86 and the bore 89. The parallel section 82 has a plain cylindrical bore 94 equal in diameter to the largest diameter of the divergent bore 90 in the preceding section, and also to that of the convergent bore 87 in the next succeeding section 80.

In the three units shown in Fig. 5, the steam pressures in the three parallel bores 94 increase in value from left to right. Steam of the same condition of pressure, temperature and wetness is supplied to all three units simultaneously, and suction is induced in the part 88 of the bore of the first input section 80. The end of the yarn to be stretched is then presented to said input section, is sucked in, drawn completely through the device and ejected from the last section 83 of the device, whence it is led to a take-up device in the manner described with reference to Fig. 2. In passing through the three parallel sections 82 the yarn is subjected to three successively higher pressures and to corresponding successively higher temperatures. Between the sections 82, however, the yarn is subjected to lower pressures but is in contact with steam at high velocities, the frictional drag of which stretches the yarn softened in the sections 94. The differences of pressure and temperature in the three sections 82 may be increased by supplying steam at successively higher pressures and temperatures in the three steam supply passages 92, instead of steam of the same condition.

If it is desired to subject the yarn, while still under the influence of steam, to a period of relaxation, the device shown in Fig. 6 can be employed. This device, like that of Fig. 5, is built up of a number of sections and is adapted to be used in the apparatus shown in Fig. 2. The first two sections are a yarn input section 80 and a combining tube section 81 similar to those of Fig. 5. The next section 97 is a parallel tube section similar to the sections 82 of Fig. 5, but of greater length and provided with an aperture 98 for a pressure gauge. The next section 99 is of the same form as the section 80 and the next section 100 is of similar form but is provided with a ring of passages 101 parallel to the axis thereof for a purpose to be described hereafter. The next section 102 has a convergent/divergent bore similar to that of the section 81 except that the divergent part 103 thereof is shorter in length than the divergent part 90 of the section 81. Annular recesses 104, 105 are formed in the two faces of the section 102, these recesses communicating with steam passages 106, 107. The next section 108 is similar to the section 102 except that the bore thereof is reversed. Annular recesses 109, 110 therein, corresponding to the recesses 104, 105 communicate with the steam passages 111, 112, respectively. The last section 115 is similar in form to the first section 80 but faces in the opposite direction. The first two sections 80, 81, as in Fig. 5, are spaced apart by the provision of a shim 85 so as to leave a shallow flat space 93, and the several sections 100, 102, 108, 115 are similarly spaced apart by shims 116 and by a spacing ring 117 between the sections 108, 115, so as to leave spaces 118 similar to the space 93.

In the operation of the device the yarn travels through the device from left to right. In order to thread up, high pressure steam is supplied to the steam passages 92 and 106, from which it passes through the annular passages surrounding the nozzles 86 of the three sections 80, 99, 100, reaching the section 99 by way of the ring of passages 101. The end of the yarn is then presented to the input section 80 and the yarn is sucked through the device and ejected through the output section 115. The yarn is then thrown-on to a take-up device as described with reference to Fig. 2. High pressure steam is then supplied to the passage 112, and the passages 107, 111 are connected to a low pressure steam reservoir into which the steam escapes from the space 118 between the sections 102, 108. At the same time the supply of steam through the passage 92 is increased so as to cause steam to blow back slightly through the input nozzle 86, and impart back-tension to the yarn.

The device described in Fig. 6 differs from those previously described in that the take-up rollers 33 (Fig. 2) are called upon to impose a substantial tension on the yarn in its dry state, in order to overcome the back tension imposed by the steam entering through the passage 112 and passing from right to left through the annular space between the nozzle of the section 115 and the divergent portion of the bore of the section 108. The action of the device as a whole is as follows. The yarn is drawn into the device by the action of the nozzles of the sections 99, 100, both of which are supplied with steam through the passage 106. This action takes place against the slight back tension imposed by the steam flowing outwardly (from right to left) through the nozzle 86. The bore of the parallel tube section 97 is filled with steam at high pressure entering through the steam passage 92 and this steam softens the yarn and enables it to be stretched by the action of the nozzle sections 99, 100. After passing through these sections however, and on entering the divergent portion 103 of the section 102, the tension in the yarn is relaxed, by reason of the flow of steam from right to left in the section 108. The yarn is thus subjected to stretching in the section 97 and to relaxation, enabling the stretched yarn to retract somewhat, in the sections 102, 108. The steam entering the low pressure reservoir through the passages 107, 111 can be used for space heating or for any other purpose to which steam at low pressure can be put.

The device shown in Figs. 7, 8 and 9 is a unit having a multiple input nozzle but (unlike the device shown in Fig. 5) a single stretching chamber. As shown in Fig. 7 the device comprises three input nozzle sections 121, 122, 123, a combining tube section 124, a parallel tube section 125 and a yarn output section 126, all these being clamped together by means of two clamping rings 127, 128 held together by six bolts 129 as shown in Figs. 7 and 8. An aperture 130 for connection with a pressure gauge is provided in the parallel section 125.

The yarn input nozzle sections 121, 122, 123 and the combining tube section 124 are shown on a larger scale and in greater detail in Fig. 9. It will be seen that each of the sections 121, 122, 123 comprises a plate-like element 134 having an input nozzle 135 protruding from the inner face thereof. Each of the input nozzles 135 has a tapered bore with a semi-vertical angle of 15° converging to a short parallel section 137. Externally each nozzle 135 comprises a short parallel section 138 and a converging tip 139 having a semi-vertical angle of 17½°. The combining tube section 124 has a convergent/divergent bore of which the convergent part 140 has a semi-vertical angle of 15° while the divergent part 141 has a semi-vertical angle of 10°. Connecting the parts 140, 141 is a short parallel part of the bore, 146. The nozzles 135 of the sections 121, 122 enter into the nozzles of the sections 122, 123 respectively, while the nozzle of the section 123 enters into the converging part 140 of the combining tube section 124. The axial position of each nozzle within the bore which it enters, is adjusted by the provision of shims 142 alternating between the sections 121, 122, 123 and 124. The combining tube section 124 is formed with a deep annular recess 143 communicating with a steam supply passage 144 and with a ring of holes 145, say six in number, extending through the plate-like parts 134 of the sections 122, 123.

The device shown in Figs. 7 to 9 is particularly designed so as to be self-thraeding even when the steam pressure within the parallel tube section 125, in which stretching takes place, is high. Pressure in the parallel part 137 of the bore of section 121 is below atmospheric so that the end of the yarn can be sucked in. The pressures in the parallel parts of the bores of the sections 122, 123 and 124, however, are successively slightly higher, the yarn being carried into and through them by the flow of steam through the annular passages between successive adjacent elements. The pressure in the throat 146 of the combining tube section 124 is finally built up during the passage of the steam along the diverging part 141 of the bore of said section leading to the bore of the parallel section 125. As with the devices shown in Figs. 3 to 6, the device is mounted and operated in the manner described with reference to Fig. 2.

The various forms of yarn treating unit described above, while they may be used for the treatment of yarns with gaseous fluids in general, are particularly designed for the stretching of yarns of cellulose acetate or other organic derivative of cellulose in the presence of wet or saturated steam, the temperature and pressure of the steam to which the yarn is subjected depending upon the degree of stretching to be effected. Thus the steam to the action of which the yarn is subjected within the unit may be, for example, at a temperature of the order of 110° C. to 140° C. or more, and at a corresponding pressure of about 20 to 52.5 lbs. per square inch absolute or more, the higher the degree of stretch desired, the higher being the pressure and temperature necessary. The pressure attained within the device is preferably adjusted, by adjusting the supply pressure, so that at least the major part of the stretching action is exerted by the flow of the steam itself, acting frictionally on the yarn, so that, except in the case of the device shown in Fig. 6, the rollers 31—34 of Fig. 2 merely exert a slight stretching action to determine with precision the final degree of stretch effected. Indeed it is possible to dispense with these rollers altogether, the yarn being drawn substantially without tension from a source of supply by the tractive effect at the inlet of the unit, and being ejected from the outlet in a stretched condition.

Having described our invention, what we desire to secure by Letters Patent is:

1. Process for the treatment of filamentary textile materials with a gaseous fluid under pressure, said process comprising passing the gaseous fluid through a passage, having a portion whose cross-section is increased and then diminished along the length of said portion to a point of minimum cross-section, with a velocity along said portion exceeding the acoustic velocity of the fluid, introducing filamentary textile material into the said passage in the neighborhood of the point of its maximum cross-section whereby said filamentary textile material is introduced into the passage at a point of minimum fluid pressure and is thereafter subjected to the action of said fluid under increased pressure, passing the material from the point of entrance thereof through a further portion of the passage, beginning at said point of minimum cross-section, of increasing cross-section, passing the fluid along said further portion of the passage with a diminishing velocity less than the acoustic velocity of the fluid so as to achieve a further increase of fluid pressure, and then passing the fluid and the material through a small outlet to the atmosphere.

2. Process according to claim 1 wherein the passage converges gradually to the small outlet.

3. Process according to claim 2 wherein the passage, before converging gradually to the small outlet, is of uniform cross-section where the pressure and velocity of the fluid are steady.

4. Process according to claim 3 wherein the fluid is saturated steam and the substance of the yarn is cellulose acetate.

5. Process according to claim 1 comprising passing a further supply of treating fluid in the opposite direction to join the fluid moving in the same direction as the material, said further fluid being introduced through a further passage whose cross-section increases up to the point of introduction and being supplied with a velocity exceeding the acoustic velocity of the fluid, and withdrawing the material from said further fluid in the neighborhood of the point of introduction of said further fluid.

6. Apparatus for the treatment of filamentary textile materials with a gaseous fluid under pressure, said apparatus comprising an elongated hollow member having a needle provided with a passage extending axially thereof for the introduction of filamentary textile material into said apparatus, the interior wall of said member and the exterior wall of said needle forming a passage surrounding said needle, said latter passage forming with the periphery of said needle an entry throat for the treating fluid supplied under pres-

sure, said interior wall of said member and the exterior wall of said needle beyond said throat diverging and then converging, whereby the cross-section of the passage beyond said entry throat is increased and then diminished, the passage in said needle communicating with said portion in the neighborhood of the point of maximum cross-section thereof, whereby the filamentary textile material is introduced into said latter passage at the point of maximum cross-section of said portion, the passage in said needle being directed towards the end of said latter passage remote from the entry throat thereof.

7. Apparatus according to claim 6 comprising filamentary textile material supply means for delivering filamentary textile material to the member at a fixed rate and filamentary textile material take-up means for collecting said material from the member at a fixed rate.

8. Apparatus according to claim 7 comprising means for driving the take-up means at a greater take-up rate than the supply rate of the supply means whereby the filamentary textile material is stretched in passing from one to the other.

9. Apparatus according to claim 8 comprising means for supplying steam of known quality to the member to serve as the gaseous fluid therein.

10. Apparatus according to claim 6 wherein, beyond the final point of convergence of said passage, the interior wall of said member diverges in the direction of motion of the fluid and the material.

11. Apparatus according to claim 6 wherein, the exit end of said interior wall is in the form of a capillary passage leading to the atmosphere.

12. Apparatus for the pretreatment of filamentary textile materials with a gaseous fluid under pressure, said apparatus comprising an elongated hollow member having a needle provided with a passage extending axially thereof for the introduction of filamentary textile material into said apparatus, the interior wall of said member and the exterior wall of said needle forming a passage surrounding said needle, said latter passage forming with the periphery of said needle an entry throat for treating fluid supplied under pressure, said interior wall of said member and the exterior wall of said needle beyond said throat diverging and then converging, whereby the cross-section of the passage beyond said entry throat is increased, then diminishes, the interior wall of said member then diverging again, then continuing as a passage of uniform cross-section, then converging to an outlet leading to the atmosphere, the passage in said needle communicating with said portion in the neighborhood of the point of maximum cross-section thereof, whereby the filamentary textile material is introduced into said latter passage at the point of maximum cross-section of said portion, the passage in said needle being directed towards the end of said latter passage remote from the entry throat thereof.

13. Apparatus according to claim 12 comprising filamentary textile material supply means for delivering filamentary textile material to the member at a fixed rate, and filamentary textile material take-up means for collecting said material from said member at a greater rate whereby the material is stretched in passing from one to the other.

14. Apparatus according to claim 13 comprising means for supplying steam of known quality to the member as the gaseous fluid therein.

15. Apparatus for the treatment of filamentary textile materials with a gaseous fluid under pressure, said apparatus comprising an elongated hollow member having a needle provided with a passage extending axially thereof for the introduction of filamentary textile material into said apparatus, the interior wall of said member and the exterior wall of said needle forming a passage surrounding said needle, said latter passage forming with the periphery of said needle an annular entry throat for the treating fluid supplied under pressure, said interior wall of said member and the exterior wall of said needle beyond said entry throat diverging and then converging, whereby the cross-section of the passage beyond said entry throat first increases and then diminishes, the passage in said needle communicating with said portions in the neighborhood of the point of maximum cross-section thereof, whereby the filamentary textile material is introduced into said latter passage at the point of maximum cross-section of said portion, the passage in said needle being directed towards the end of said latter passage remote from the entry throat thereof.

16. Apparatus according to claim 15 wherein the inner wall of said member converges up to the point of entry of the material, and beyond said point.

17. Apparatus according to claim 16 comprising filamentary textile material supply means for delivering filamentary textile material to the member at a fixed rate, and filamentary textile material take-up means for collecting said material from said member at a greater rate whereby the material is stretched in passing from one to the other.

18. Apparatus according to claim 17 comprising means for supplying steam of known quality to the member as the gaseous fluid therein.

DONALD FINLAYSON.
MAITLAND WALTON ALFORD.

REFERENCES CITED

The following references are of record in the file of this patent:

UNITED STATES PATENTS

Number	Name	Date
1,897,122	Hartmann	Feb. 14, 1933
2,131,409	Nai	Sept. 27, 1938
2,371,579	Cole	Mar. 13, 1945
2,425,037	Jackson	Aug. 5, 1947

OTHER REFERENCES

"Technical Thermodynamics," by Schule, pages 228 to 230, published by Pitman (of record).