(12) INTERNATIONAL APPLICATION PUBLISHED UNDER THE PATENT COOPERATION TREATY (PCT)

(19) World Intellectual Property Organization
International Bureau

(43) International Publication Date
15 October 2020 (15.10.2020)

WIPO | PCT

(10) International Publication Number
WO 2020/208349 A1

(51) International Patent Classification:
A61F 2/95 (2013.01)

(21) International Application Number:
PCT/GB2020/050912

(22) International Filing Date:
08 April 2020 (08.04.2020)

(25) Filing Language: English

(26) Publication Language: English

(30) Priority Data:
1904922.0 08 April 2019 (08.04.2019) GB

(71) Applicant: **VASCUTEK LIMITED** [GB/GB]; Newmains Avenue, Inchinnan, Renfrewshire PA4 9RR (GB).

(72) Inventor: **SIMPSON, Graeme**; 0/2 3, Havelock Street, Glasgow Central Scotland G11 5JB (GB).

(74) Agent: **MURGITROYD & COMPANY**; Murgitroyd House, Murgitroyd House, 165-169 Scotland Street, Glasgow Central Scotland G5 8PL (GB).

(81) Designated States *(unless otherwise indicated, for every kind of national protection available)*: AE, AG, AL, AM, AO, AT, AU, AZ, BA, BB, BG, BH, BN, BR, BW, BY, BZ, CA, CH, CL, CN, CO, CR, CU, CZ, DE, DJ, DK, DM, DO, DZ, EC, EE, EG, ES, FI, GB, GD, GE, GH, GM, GT, HN, HR, HU, ID, IL, IN, IR, IS, JO, JP, KE, KG, KH, KN, KP, KR, KW, KZ, LA, LC, LK, LR, LS, LU, LY, MA, MD, ME, MG, MK, MN, MW, MX, MY, MZ, NA, NG, NI, NO, NZ, OM, PA, PE, PG, PH, PL, PT, QA, RO, RS, RU, RW, SA, SC, SD, SE, SG, SK, SL, ST, SV, SY, TH, TJ, TM, TN, TR, TT, TZ, UA, UG, US, UZ, VC, VN, WS, ZA, ZM, ZW.

(84) Designated States *(unless otherwise indicated, for every kind of regional protection available)*: ARIPO (BW, GH, GM, KE, LR, LS, MW, MZ, NA, RW, SD, SL, ST, SZ, TZ, UG, ZM, ZW), Eurasian (AM, AZ, BY, KG, KZ, RU, TJ, TM), European (AL, AT, BE, BG, CH, CY, CZ, DE, DK, EE, ES, FI, FR, GB, GR, HR, HU, IE, IS, IT, LT, LU, LV, MC, MK, MT, NL, NO, PL, PT, RO, RS, SE, SI, SK, SM, TR), OAPI (BF, BJ, CF, CG, CI, CM, GA, GN, GQ, GW, KM, ML, MR, NE, SN, TD, TG).

Published:
— *with international search report (Art. 21(3))*
— *before the expiration of the time limit for amending the claims and to be republished in the event of receipt of amendments (Rule 48.2(h))*

(54) **Title:** MEDICAL DEVICE RELEASE APPARATUS, SYSTEM AND METHOD OF USE

(57) **Abstract:** The present invention concerns a medical device delivery apparatus, the apparatus comprising:- a head element (11) at a proximal end of the apparatus, the head being configured for extending through the medical device and projecting proximally therefrom; the head element having one or more hook elements (13) for engaging a control loop coupled to the medical device, wherein the one or more hook elements are axially fixed in relation to the head element.

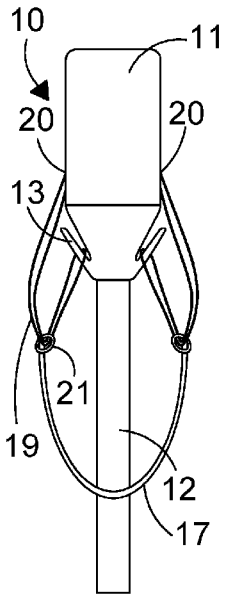

FIG. 4A

WO 2020/208349 A1

Medical Device Release Apparatus, System and Method of Use

The present invention relates to a medical device release apparatus and a method of use thereof.

In this regard, medical devices such as endovascular stent devices are generally attached to their delivery system using a combination of control loop, eyelet and release wire. As shown in Figures 1 to 3, this connection is achieved by threading the free end of a control loop 2 of a control thread through an eyelet 3 with the other end being fixed to the tip of the delivery system. A release wire 4 is then passed through the open loop of the control thread, created when the control thread is passed through the eyelet, to prevent it from being pulled back through the eyelet.

The medical device 5 is released from the delivery system by removing the release wire 4, which allows the control loop 2 to pull back through the eyelet, freeing the device from the delivery system.

This arrangement can cause issues if the release wire is damaged and cannot be removed from the control loop. This prevents the user from being able to remove the delivery system from the patient without additional bail out procedures or a full conversion to open surgery.

Issues can also occur if the user forgets to remove the release wire before attempting to remove the delivery system. This causes the device to migrate from the intended sealing zone, disrupting the seal and potentially damaging the vessel in the process.

The present invention provides an apparatus and method, which seek to alleviate the problems of such known arrangements.

According to the present invention there is provided a medical device delivery apparatus, the apparatus comprising:- a head element at a proximal end of the apparatus, the head being configured for extending through the medical device and projecting proximally therefrom; the head element having one or more hook elements

for engaging a control loop coupled to the medical device, wherein the one or more hook elements are axially fixed in relation to the head element.

In this manner, the medical device can be released at the same time as the delivery system is withdrawn without additional mechanical operation of the apparatus.

Preferably, the one or more hook elements are forward facing, with their free end extending in a direction towards the proximal end of the head element.

Conveniently, the head element has two hook elements.

Preferably, the hook elements are provided at diametrically opposite sides of the head element.

Conveniently, the one or more hook elements extend proximally to project radially outwardly from the longitudinal profile of the head element.

Preferably, the one or more hook elements are provided at a distal end of the head element.

Conveniently, the one or more hook elements each take the form of an inclined slot, open at a proximal end and closed at a distal end.

Preferably, each slot has a tapering profile.

Conveniently, the head element comprises a head body and a head plate, the head plate being coupled to a distal end of the head body to define said one or more hook elements between the head body and the head plate.

Preferably, the head body is chamfered at its distal end, to define said one or more hook elements.

Conveniently, the apparatus further comprises one or more attachment points for an end of a control loop.

Preferably, the one or more attachment points are provided on the head element proximally of the one or more hook elements.

Conveniently, the one or more hook elements are moveable between deployed and un-deployed positions.

Preferably, the one or more hook elements are pivotable between the deployed and un-deployed positions.

Conveniently, the one or more hook elements are retractable so as to be substantially flush with the longitudinal profile of the apparatus.

Preferably, the one or more hook elements are profiled so that rotation of the head element promotes release of any control loop engaged by the one or more hook element.

Conveniently, the one or more hook elements comprise an angled section having a radially extending portion, the radially extending portion being configured to engage a control loop.

The apparatus preferably further comprises alignment means for aligning said one or more hook elements with one or more eyelets of medical device.

According to a further aspect of the present invention there is provided a medical device deployment system for deploying a medical device comprising:- medical device delivery apparatus having a head element at a proximal end of the apparatus, the head being configured for extending through the medical device and projecting proximally therefrom, the head element having one or more hook elements for engaging a control loop coupled to the medical device, wherein the one or more hook elements are axially fixed in relation to the head element.

According to a yet further aspect of the present invention there is provided a method of deploying a medical device using the delivery apparatus or deployment system of any preceding claim, the method comprising the steps:- passing said delivery apparatus through the interior of the medical device so that it protrudes from a

proximal end thereof; coupling the medical device and one or more hook elements of the delivery apparatus using one or more control loops; advancing the apparatus to the deployment site; deploying the medical device at the site; and retracting the delivery apparatus, the one or more control loops releasing from the one or more hook elements, wherein the one or more hook elements are axially fixed in relation to the head element.

Preferably, said one or more control loops are attached to the head element of the delivery apparatus, pass through one or more eyelets provided to said medical device and then pass around said one or more hook elements before passing again through the one or more eyelets.

Conveniently, the one or more control loops are attached to the medical device, and pass around the one or more hook elements.

Preferably, the medical device has an undulating proximal end profile, the one or more control loops being attached to proximal peaks of the medical device.

Conveniently, the one or more hook elements are moved to facilitate release the one or more control loops.

Preferably, the one or more hook elements are pivoted rearwardly to facilitate release the one or more control loops.

Conveniently, the head element is rotated about its longitudinal axis to facilitate release the more or more control loops.

Embodiments of the present invention will now be described by way of example and with reference to the accompanying drawings, of which:-

Figures 1 to 3 show a known arrangement for delivering a medical device to a site;
Figures 4a to 4d show a first embodiment of the present invention;
Figure 5a to 5e show a second embodiment of the present invention;
Figure 6a to 6c show a third embodiment of the present invention; and
Figures 7a and 7b show a fourth embodiment of the present invention.

Figures 1 to 3 are discussed above and relate to a conventional delivery system for an endovascular device. Such systems can experience issues where the release wire is damaged or where the user forgets to remove it before attempting to remove the delivery system.

The present invention hence seeks to provide a medical device delivery system that does away with the need for release wire.

In this respect, as shown in Figures 4a to 4d, the delivery apparatus 10 comprises a tip or head element 11 at the proximal end of a longitudinal shaft 12. The head element has hook elements 13 that project radially outwardly and forwardly towards the proximal end of the head element. The hook elements may be formed in any suitable manner, and in the present embodiment are formed by chamfering the distal end of the head element and coupling a plate 14 thereto, in order to form slots 15. As shown, the ends 16 of the plates preferably project radially outwardly of the general outer longitudinal profile of the head element 11.

As shown, in use the head element is positioned to extend through the interior of a medical device 17, such as an endovascular stent, so that the head element 11 projects out of its proximal end. For clarity, the structure of the medical device is not shown in detail in the figures but may comprise an expandable stent device having an undulating proximal end denoted by reference 17. In the embodiment of Figures 4a to 4d, control loops 19 are attached at one end to the head element at attachment points 20 above the hook elements, namely closer to the proximal end of the head element.

Each control loop extends rearwardly and passes through an eyelet 21 coupled to the medical device. The loop then returns back to the head element to be looped around hook element 11 before returning to the eyelet and then up towards the proximal end of the apparatus.

Figures 4a to 4d show the progression of the head element relative to the medical device 17. In Figure 4a, the medical device has been moved to the correct position in relation to the site where it can be fixed in position. This may be by expanding the device so that it seals against the internal surfaces of a vessel in which it is being deployed.

Once correctly fixed in position, the delivery apparatus is retracted as shown in Figures 4b to 4d so that it passes rearwardly within the device towards its distal end.

As the eyelets become level with the hook elements 11, the control loops are no longer pulled downwardly into the hook elements and can therefore start to become free of the hook elements, as shown in Figures 4b and 4c. Then at Figure 4d the

control loops are no longer hooked around the hook elements so can run through the eyelets as the delivery apparatus is retracted.

The head element design removes the requirement for release wires in the attachment method and releases the device at the same time as the delivery system is removed from the patient, with no additional actions required from the user.

As described above, this may be achieved this by increasing the length of the control loops and incorporating two hooks, one at either side of the head element or tip, co-linear with the control loops. To assemble the device to the delivery system the control loops are fed through the eyelets before the free ends are attached to the hooks on the tip.

When the device eyelets are lower than the tip, the control loops will stay attached to the hooks. The device will therefore stay attached to the delivery system during compaction and unsheathing. However, when the tip is moved lower than the eyelets (e.g. when the delivery system is removed from the device), the control loops will detach from the hooks, allowing them to pull out of the eyelets and freeing the device from the delivery system.

The configuration of the present invention as such means that a separate mechanical step is not required as the apparatus is withdrawn. The device is released merely by withdrawing the head element, i.e. the delivery system tip.

In this connection, the hooks elements are axially fixed in place on the delivery system tip, and it is the relative position of the graft, with respect to the hooks, that fixes or releases the device.

In this connection, the hooks elements/slots should preferably be:- integrated onto the delivery system; above the level of the device; angled towards the device so that the 'closed' portion of the hook/slot is closest to the device; and open at one end so the control loops are free to leave. The control loops are preferably:- attached to the delivery system at one end (with the other end free); and long enough to loop through the eyelets and attach onto the hooks. The eyelets preferably are attached to the device.

A second embodiment of the present invention is described in relation to Figure 5a to 5e.

In this embodiment, control loops 30 are attached to the peaks 31 of the 1st ring of the medical device. When assembling the device to the delivery system, the control loops simply latch onto the hook elements 32 provided on the tip. This attachment method functions in the same way as above in relation to the first embodiment (the relative position of the tip with regard to the control loop attachment point would

dictate whether or not the device was attached to the delivery system). However, this embodiment would leave control loops attached to the device in situ.

The hook elements may be provided with a secondary feature that allows them to be removed from the head element or tip, leaving the control loops free to pull out of the eyelets. This would aid in any circumstance in which the control loops became caught on the hook elements preventing the device from releasing.

Figures 6a to 6c shows a third embodiment where the hook elements 40 are able to be retracted in order to release the device.

As shown in the fourth embodiment of figures 7a and 7b, the hook elements 50 may be angled or shaped such that rotation of the head element 11 also causes or facilitates the control loops to exit the hooks.

The control loops 52 may run the length of the delivery system so that they can be cut and removed, freeing the device from the delivery system. This would act as a failsafe if the control loops got caught in the hook elements.

The various embodiments of the present invention maintain the advantages of tethering the top of the medical device to the delivery system for more accurate deployment and easier manufacturing, but they remove any additional steps required by the user to detach the device from the delivery system, such as removing release wires, top cap, etc. associated with known methods.

Claims:-

1. A medical device delivery apparatus, the apparatus comprising:-

a head element at a proximal end of the apparatus, the head being configured for extending through the medical device and projecting proximally therefrom;

the head element having one or more hook elements for engaging a control loop coupled to the medical device, wherein the one or more hook elements are axially fixed in relation to the head element.

2. Apparatus according to claim 1, wherein the one or more hook elements are forward facing, with their free end extending in a direction towards the proximal end of the head element.

3. Apparatus according to claim 1 or 2, wherein the head element has two hook elements.

4. Apparatus according to claim 3, wherein the hook elements are provided at diametrically opposite sides of the head element.

5. Apparatus according to any one of claims 1 to 4, wherein the one or more hook elements extend proximally to project radially outwardly from the longitudinal profile of the head element.

6. Apparatus according to any preceding claim, wherein the one or more hook elements are provided at a distal end of the head element.

7. Apparatus according to any preceding claim, wherein the one or more hook elements each take the form of an inclined slot, open at a proximal end and closed at a distal end.

8. Apparatus according to claim 7, wherein each slot has a tapering profile.

9. Apparatus according to any preceding claim, wherein the head element comprises a head body and a head plate, the head plate being coupled to a

distal end of the head body to define said one or more hook elements between the head body and the head plate.

10. Apparatus according to claim 9, wherein the head body is chamfered at its distal end. [to define said one or more hook elements with said]

11. Apparatus according to any preceding claim, further comprising one or more attachment points for an end of a control loop.

12. Apparatus according to claim 11, wherein the one or more attachment points are provided on the head element proximally of the one or more hook elements.

13. Apparatus according to any preceding claim, wherein the one or more hook elements are moveable between deployed and un-deployed positions.

14. Apparatus according to claim 13, wherein the one or more hook elements are pivotable between the deployed and undeployed positions.

15. Apparatus according to claim 13, wherein the one or more hook elements are retractable so as to be substantially flush with the longitudinal profile of the apparatus.

16. Apparatus according to any preceding claim, wherein the one or more hook elements are profiled so that rotation of the head element promotes release of any control loop engaged by the one or more hook element.

17. Apparatus according to claim 16, wherein the one or more hook elements comprise an angled section having a radially extending portion, the radially extending portion being configured to engage a control loop.

18. Apparatus according to claim 16 or 17, further comprising alignment means for aligning said one or more hook elements with one or more eyelets of medical device.

19. A medical device deployment system for deploying a medical device comprising:-

medical device delivery apparatus having a head element at a proximal end of the apparatus, the head being configured for extending through the medical device and projecting proximally therefrom, the head element having one or more hook elements for engaging a control loop coupled to the medical device, wherein the one or more hook elements are axially fixed in relation to the head element.

20. A method of deploying a medical device using the delivery apparatus or deployment system of any preceding claim, the method comprising the steps:-

passing said delivery apparatus through the interior of the medical device so that it protrudes from a proximal end thereof;

coupling the medical device and one or more hook elements of the delivery apparatus using one or more control loops;

advancing the apparatus to the deployment site;

deploying the medical device at the site;

retracting the delivery apparatus, the one or more control loops releasing from the one or more hook elements, wherein the one or more hook elements are axially fixed in relation to the head element.

21. The method of claim 20, wherein said one or more control loops are attached to the head element of the delivery apparatus, pass through one or more eyelets provided to said medical device and then pass around said one or more hook elements before passing again through the one or more eyelets.

22. The method of claim 20, wherein the one or more control loops are attached to the medical device, and pass around the one or more hook elements.

23. The method of claim 22, wherein the medical device has an undulating proximal end profile, the one or more control loops being attached to proximal peaks of the medical device.

24. The method of claim 20, wherein the one or more hook elements are moved to facilitate release the one or more control loops.

25. The method of claim 24, wherein the one or more hook elements are pivoted rearwardly to facilitate release the one or more control loops.

26. The method of claim 20, wherein the head element is rotated about its longitudinal axis to facilitate release the more or more control loops.

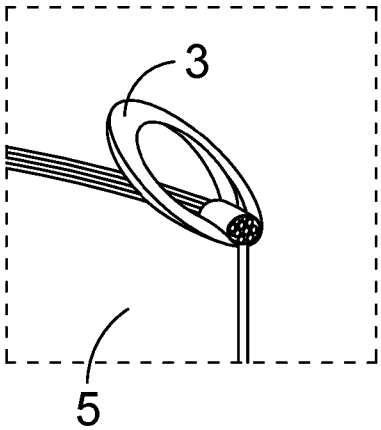

FIG. 1

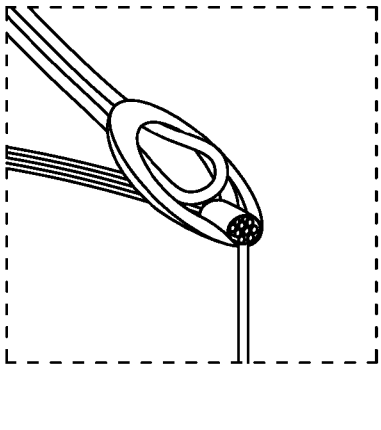

FIG. 2

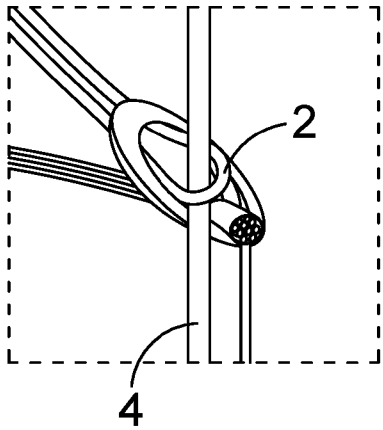

FIG. 3

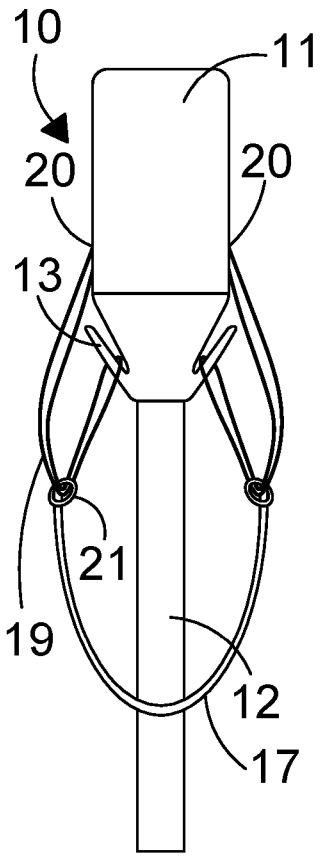

FIG. 4A

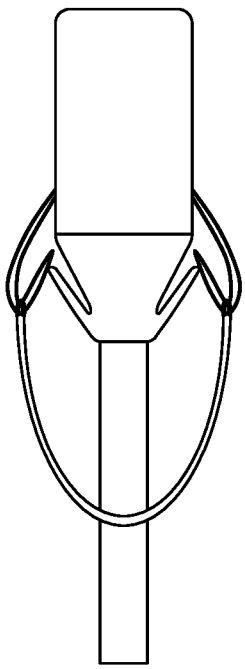

FIG. 4B

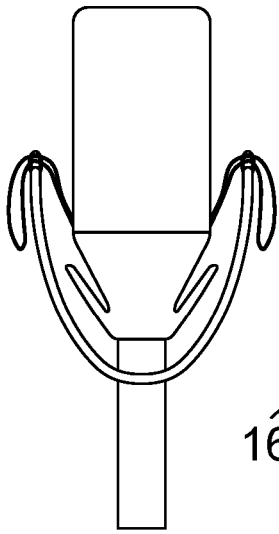

FIG. 4C

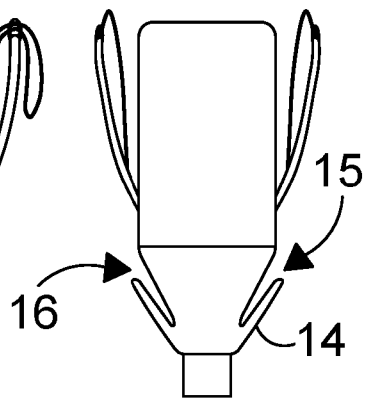

FIG. 4D

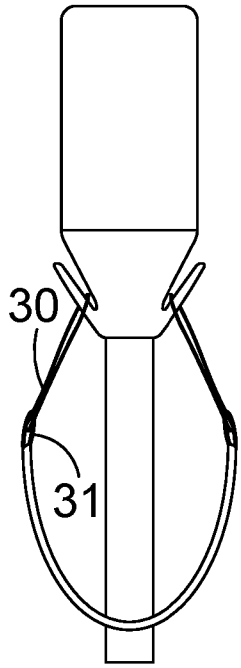

FIG. 5A

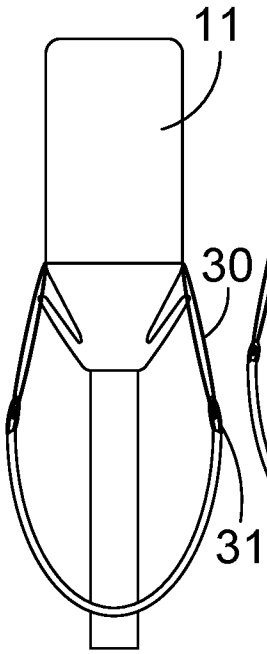

FIG. 5B

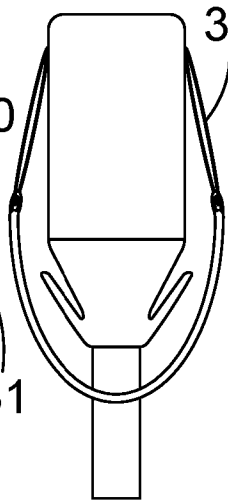

FIG. 5C

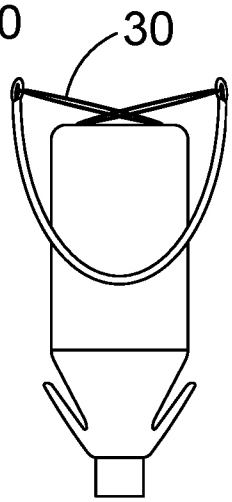

FIG. 5D

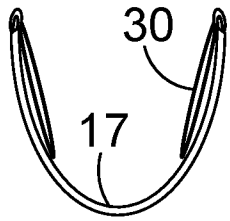

FIG. 5E

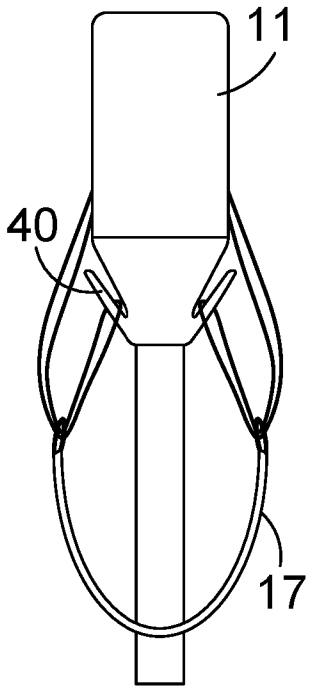

FIG. 6A

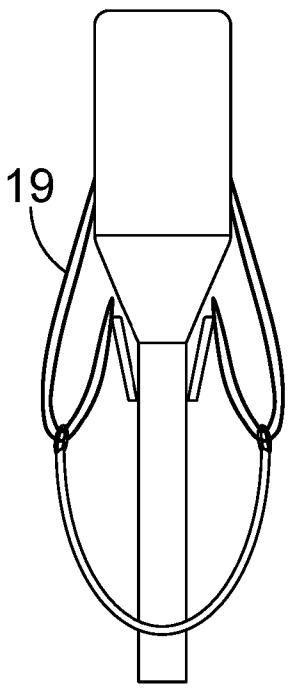

FIG. 6B

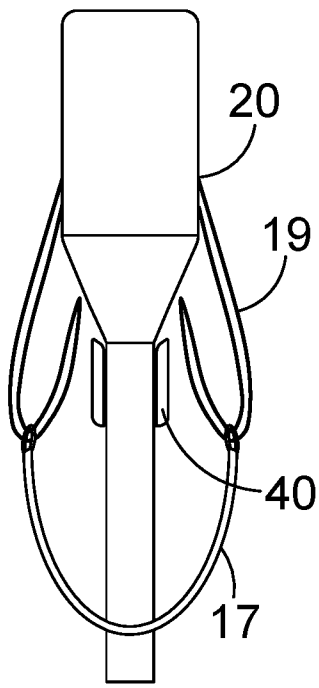

FIG. 6C

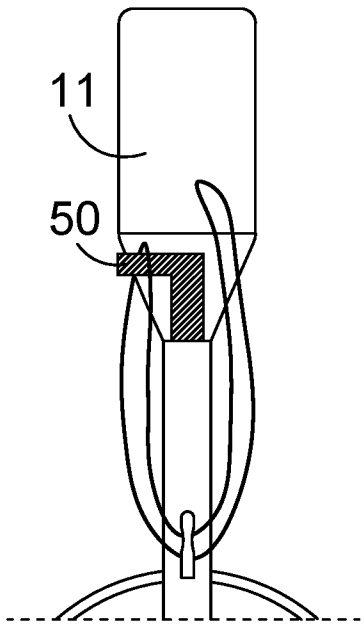

FIG. 7A

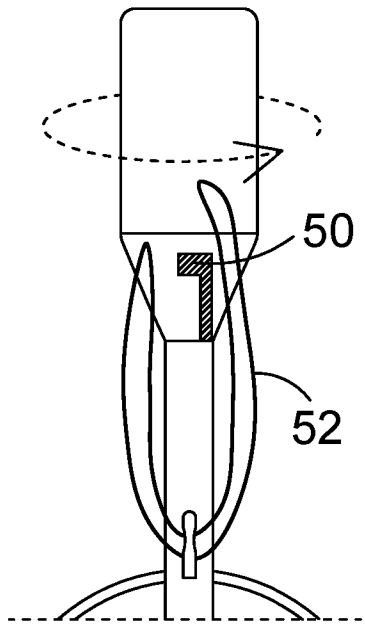

FIG. 7B

INTERNATIONAL SEARCH REPORT

International application No
PCT/GB2020/050912

A. CLASSIFICATION OF SUBJECT MATTER
INV. A61F2/95
ADD.

According to International Patent Classification (IPC) or to both national classification and IPC

B. FIELDS SEARCHED

Minimum documentation searched (classification system followed by classification symbols)
A61F

Documentation searched other than minimum documentation to the extent that such documents are included in the fields searched

Electronic data base consulted during the international search (name of data base and, where practicable, search terms used)
EPO-Internal, WPI Data

C. DOCUMENTS CONSIDERED TO BE RELEVANT

Category*	Citation of document, with indication, where appropriate, of the relevant passages	Relevant to claim No.
X	US 2013/289703 A1 (KINKADE JEREMY [US] ET AL) 31 October 2013 (2013-10-31)	1-10,19
A	paragraphs [0038] - [0040]	11,12
A	US 2014/236278 A1 (ARGENTINE JEFFERY [US] ET AL) 21 August 2014 (2014-08-21) the whole document	1

☐ Further documents are listed in the continuation of Box C.

☒ See patent family annex.

* Special categories of cited documents :

"A" document defining the general state of the art which is not considered to be of particular relevance

"E" earlier application or patent but published on or after the international filing date

"L" document which may throw doubts on priority claim(s) or which is cited to establish the publication date of another citation or other special reason (as specified)

"O" document referring to an oral disclosure, use, exhibition or other means

"P" document published prior to the international filing date but later than the priority date claimed

"T" later document published after the international filing date or priority date and not in conflict with the application but cited to understand the principle or theory underlying the invention

"X" document of particular relevance; the claimed invention cannot be considered novel or cannot be considered to involve an inventive step when the document is taken alone

"Y" document of particular relevance; the claimed invention cannot be considered to involve an inventive step when the document is combined with one or more other such documents, such combination being obvious to a person skilled in the art

"&" document member of the same patent family

Date of the actual completion of the international search	Date of mailing of the international search report
9 June 2020	12/08/2020

Name and mailing address of the ISA/	Authorized officer
European Patent Office, P.B. 5818 Patentlaan 2 NL - 2280 HV Rijswijk Tel. (+31-70) 340-2040, Fax: (+31-70) 340-3016	Angeli, Markus

INTERNATIONAL SEARCH REPORT

International application No.
PCT/GB2020/050912

Box No. II Observations where certain claims were found unsearchable (Continuation of item 2 of first sheet)

This international search report has not been established in respect of certain claims under Article 17(2)(a) for the following reasons:

1. [X] Claims Nos.: 20-26
because they relate to subject matter not required to be searched by this Authority, namely:

Rule 39.1(iv) PCT - Method for treatment of the human or animal body by surgery

2. [ ] Claims Nos.:
because they relate to parts of the international application that do not comply with the prescribed requirements to such an extent that no meaningful international search can be carried out, specifically:

3. [ ] Claims Nos.:
because they are dependent claims and are not drafted in accordance with the second and third sentences of Rule 6.4(a).

Box No. III Observations where unity of invention is lacking (Continuation of item 3 of first sheet)

This International Searching Authority found multiple inventions in this international application, as follows:

see additional sheet

1. [ ] As all required additional search fees were timely paid by the applicant, this international search report covers all searchable claims.

2. [ ] As all searchable claims could be searched without effort justifying an additional fees, this Authority did not invite payment of additional fees.

3. [ ] As only some of the required additional search fees were timely paid by the applicant, this international search report covers only those claims for which fees were paid, specifically claims Nos.:

4. [X] No required additional search fees were timely paid by the applicant. Consequently, this international search report is restricted to the invention first mentioned in the claims; it is covered by claims Nos.:

1-12, 19

Remark on Protest

[ ] The additional search fees were accompanied by the applicant's protest and, where applicable, the payment of a protest fee.

[ ] The additional search fees were accompanied by the applicant's protest but the applicable protest fee was not paid within the time limit specified in the invitation.

[ ] No protest accompanied the payment of additional search fees.

FURTHER INFORMATION CONTINUED FROM PCT/ISA/ 210

This International Searching Authority found multiple (groups of) inventions in this international application, as follows:

1. claims: 1-12, 19

   A medical device delivery apparatus directed to a special control loop attachment point for facilitating the use of a control loop.

   ---

2. claims: 13-15

   A medical device delivery apparatus directed to special movable hooks for facilitating detachment introduction or extraction of the apparatus.

   ---

3. claims: 16-18

   A medical device delivery apparatus directed to special profiled hooks for facilitating release of the control loop.

INTERNATIONAL SEARCH REPORT

Information on patent family members

International application No
PCT/GB2020/050912

Patent document cited in search report	Publication date	Patent family member(s)	Publication date
US 2013289703 A1	31-10-2013	US 2013289703 A1	31-10-2013
		US 2015025617 A1	22-01-2015
US 2014236278 A1	21-08-2014	CN 105007865 A	28-10-2015
		EP 2958528 A1	30-12-2015
		JP 6261619 B2	17-01-2018
		JP 2016511042 A	14-04-2016
		US 2014236278 A1	21-08-2014
		WO 2014130235 A1	28-08-2014