Jan. 26, 1965 J. H. LEMELSON 3,166,829

DUCTED SHEETING CONSTRUCTION

Filed May 28, 1956

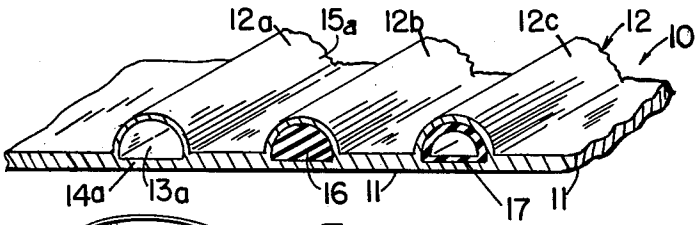

Fig.1

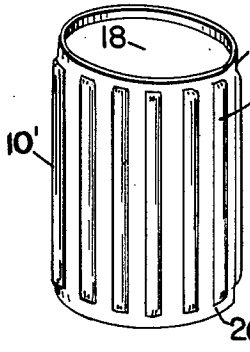

Fig. 2

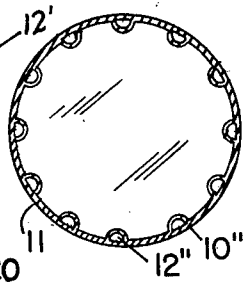

Fig.3

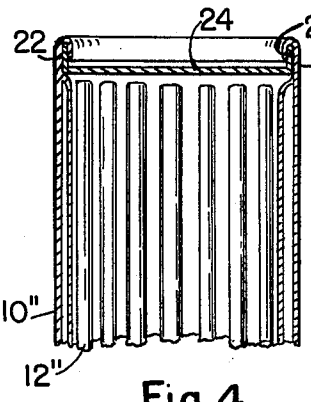

Fig. 4

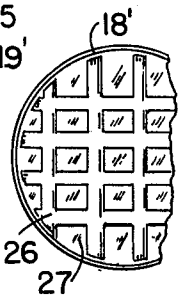

Fig.5

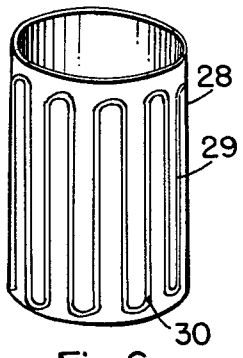

Fig. 6

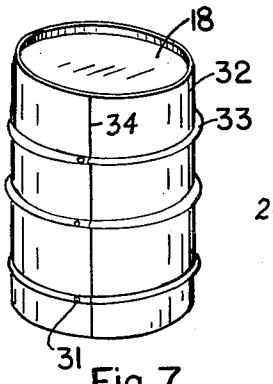

Fig. 7

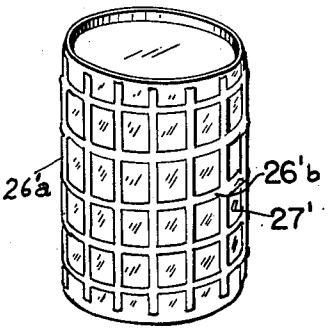

Fig. 8

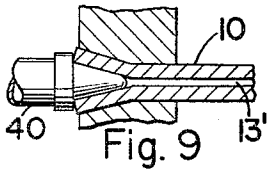

Fig. 9

INVENTOR.

JEROME H. LEMELSON

BY

United States Patent Office 3,166,829 Patented Jan. 26, 1965

3,166,829

DUCTED SHEETING CONSTRUCTION

Jerome H. Lemelson, 289 High St., Perth Amboy, N.J.

Filed May 28, 1956, Ser. No. 589,848
8 Claims. (Cl. 29—155)

This invention relates to methods for fabricating a reinforced metal panel capable of various uses, for example, the fabrication of containers, walls, heat exchangers and the like.

It is known in the art to form a sheet or plate of metal having a strip-like interfacial volume disposed between the major faces of the sheet and extending substantially parallel thereto, which volume may be expanded by applying fluid pressure thereto to cause the metal adjacent at least one side of said strip-like volume to outwardly expand and to form a duct or tubular formation in the sheet. Two fabrication techniques have had substantially wide commercial acceptance in the fabrication of so called ducted sheeting and are commercially referred to as the Tube-In-Strip and Roll-Bond Methods. The Roll-Bond method involves printing a pattern of stop-weld material on a first sheet of metal such as aluminum and hot rolling said sheet to a second sheet in a manner to weld the two together save in the printed areas which define said strip-like volumes which are capable of being expanded by the application of fluid pressure thereto. The Tube-In-Strip method involves the incorporation of strips of friable material into the metal billet to be rolled into sheet form which strips eventually define thin sheets of said friable material within the final hot rolled sheeting and prevent the fusion of material in the immediate area of the strips, thereby defining a non-welded, strip-like interfacial volume capable of inflation and outward deformation of the resulting metal.

Sheeting produced by either of the above methods has the characteristic that the outwardly expanded portion of the sheet forming the wall of the ducting is substantially reduced in cross-section and is unsupported from within. Accordingly, the expanded portion of the sheet has substantially less strength than the sheet itself and may be easily buckled or inwardly collapsed if subjected to blows or other forces applied thereagainst. It is accordingly a primary object of this invention to provide a reinforced metal panel of improved design which can be produced inexpensively.

Another object is to provide an improved method of fabricating a sheet metal panel from a unitary sheet of metal from which a variety of improved articles of manufacture may be fabricated.

Another object is to provide a method of reinforcing and stiffening a sheet of metal containing integral duct formations without the need for providing external supports therefore.

Another object is to provide a method of simultaneously expanding a sheet of metal and providing internal reinforcing means therefore in a single operation.

To the accomplishment of the foregoing and related ends, said invention then consists of means hereinafter fully described and particularly pointed out in the claims, the annexed drawing and the following description setting forth in detail certain structures and methods embodying the invention, such disclosed means constituting, however, but one of various forms in which the principle of the invention may be used.

FIG. 1 is an isometric view of a fragment of a ducted sheet showing a reinforcing material retained within certain of the duct formations of the sheeting;

FIG. 2 is an isometric view of a container fabricated at least in part of reinforced sheet material similar to the type shown in FIG. 1;

FIG. 3 is a cross sectional view of a cylindrical container made of the material shown in FIG. 1 wherein the duct formations extend inward;

FIG. 4 is a fragmentary view taken in longitudinal cross-section of the container shown in lateral cross-section in FIG. 3;

FIG. 5 shows the reinforcing means of FIG. 1 applied to the top or bottom of a container;

FIG. 6 is an isometric view of a cylindrical container having a duct formation of a sinuous shape extending around its sidewall;

FIG. 7 is an isometric view of a container having a plurality of circular reinforcing duct-like formations in its side-wall; and

FIG. 8 is an isometric view of a cylindrical container having a grid-like reinforcing formation in its side-wall.

FIG. 9 is a side view of a sheet of the type illustrated in FIG. 1 having an injection nozzle coupled to an edge opening therein prior to expansion of the sheet.

Illustrated in FIG. 1 is a portion of a sheet metal panel 10 having integrally formed conduits or ducts 12 provided between solid formations 11 of the sheet and referred to by notations 12*a*, 12*b* and 12*c* which are illustrated as extending substantially parallel to each other along respective lateral portions of the sheet. Such ducted sheeting may be fabricated by initially providing a sheet having one or more strip areas which are void of metal such as illustrated at 13' and run parallel to and between the major faces of the sheet with the metal and the disposition of the strip volumes being such that the application of sufficient fluid pressure to said strip volume will cause the sheet material adjacent said strip volumes to outwardly inflate or bulge from the remaining portions of the sheet.

For the purposes of illustrating the various aspects of this invention, duct formation 12*a* is shown as having an interior volume 13*a* defined thereby and the portion 14*a* of the opposite wall of the sheet comprising a flat wall of said ducting, as being void of any supporting material other than fluid contained within said volume. Duct formation 12*b* is shown having a solid material 16 completely filling the interior volume 13*b* of the duct. Duct formation 12*c* defines a volume 13*c* interior thereof and the opposite wall portion of the sheet which is partially filled with a material 17 lining the inside wall thereof. A sheet or panel such as 10 may be provided in a predetermined shape and utilized, with interiorally reinforced formations such as provided at 12*b* or 12*c* which sheeting may also contain one or more duct formations such as 12*a* which are void of solid fillers.

The filler materials or formations defined by the notations 16 and 17 may serve one or more of a plurality of useful purposes, the primary of which is to reinforce and strengthen the panel by preventing the inward buckling or collapsing of portions of the outwardly expanded walls of the ducting filled thereby. It is obvious that, as long as the wall formations 12 which expand outward from the main body of the sheet 10, are not indented, buckled or locally damaged, the full advantage of the rigidity imparted to the sheet by said formations is retained and to this end, various low cost filler materials may be employed within said duct formations. For example, the filler materials may comprise various, self hardenable fluid or liquid materials such as various mortars, Portland cement, ceramcis, plastics or even metal injected into either the pre-formed ducting or said interfacial strip areas, prior to solidifying, and in a manner to effect the outward deformation or inflation of the metal sheet to provide either formations of the type illustrated in FIG. 1 or formations bulging from both surfaces of the ducted sheet 10. Various molten plastic materials which may be injected to solidify within the voids in the ducted sheet material include such thermoplastic materials as vinyls, polyamides, fluorocarbons, polystyrenes, acetates, ure-

thanes and other resins as well as thermosetting materials such as polyesters, epoxys, ureas and other similar resins. These may also include foamed or cellular plastic materials which foam and cure within the expanded ducting as the result of the chemical reaction of the components thereof. Molten metals such as aluminum, lead or the like may also be utilized as filler material.

A number of methods are hereinafter provided for fabricating sheeting of the type illustrated in FIG. 1 and articles thereof:

In a first method, the sheet of metal containing one or more slits or strip volumes extending parallel to the major surfaces of the sheet such as 13' illustrated in FIG. 1, is provided in a non-deformed state and an injection nozzle is coupled to the strip volume by, for example, insertion into an opening thereto extending from an edge of the sheet such as illustrated at 13'. Once coupling of said nozzle and the sealing thereof against the walls of the strip volume of the sheet is effected and all other openings to the strip volume are sealed off, a filler material in a fluent or liquid state is injected through the nozzle into the sheet to effect the expansion of the strip-like volume and the outward bulging of at least one wall thereof to provide a duct-like formation such as 12 which is completely filled with the bulk filler material such as illustrated 16. Thereafter the edge opening to the expanded volume is closed off such as by collapsing a portion of the expanded wall of the tubular formation or by allowing the liquid filler material thereafter to solidify. Depending on the characteristics of the filler material, the panel may be further fabricated to effect the solidification or partial solidification of said filler material. For example, if the filler material requires the transfer of heat therefrom to solidify, the panel may be immersed in a heat transfer liquid to effect transfer of said heat.

In another method, the panel may be pre-expanded by means of a first fluid and thereafter filled or at least partially filled with the core material in a fluent or liquid state which is thereafter allowed or caused to solidify within the panel. Here again, closure of the end of the sheet tubular formation may be effected by either collapsing the end of the formation to cause the walls thereof to abut each other or by allowing the filler material to solidify. Further modifications to the above methods may include such post operations as welding the collapsed portions of the tubular formations of the sheet to assure closure thereof and further forming of the sheet either prior to or after expansion of the tubular formations therein such as rolling, bending or the like into an article of manufacture or a component of an article of manufacture.

The material 17 lining the inside wall of duct formation 12c in FIG. 1 may be provided by flowing a molten or fluidized plastic material through the expanded duct formation and causing said material to coat or solidify as a shell against the inside surface of the tubular formation. Excess plastic may be poured off or removed prior to the formation of a solid core to provide a lining for the inside wall of the duct.

The methods described hereinabove may be applied to the fabrication of sheeting or panels of metal which may be used as components of wall panels, containers, or other articles requiring an integrally stiffened sheet of metal. If the material injected to fill or partly fill the vein-like duct formations is a self-forming plastic capable of solidifying within the duct-formations 12 into a cellular material, it may be utilized to absorb vibrations or shock forces to which the panel is subjected during use, and/or serve as an insulating means.

FIGS. 2 to 8 illustrate various structures in cylindrical containers or cannisters fabricated of ducted sheeting of the type illustrated in FIG. 1. In FIG. 2 the container is provided with a cylindrically shaped side wall 10' having a plurality of outwardly projecting formations 12' corresponding to the duct formations 12 of FIG. 1, which formations extend longitudinally along said side wall and parallel to the longitudinal axis of the container. Fabrication of the container of FIG. 2 is affected by rolling a section of the sheet material 19 into a cylinder, either prior to or after inflating the interfacial volumes 13' and, after inflations of said interfacial volumes to provide a plurality of parallel outwardly projecting formations, preferably with reinforcing material such as 16 provided therein, flattening the end portions of each formation to provide end links or portions of the cylinder free of the projections as illustrated at 19 and 20. The flat sheet formations 19 and 20 may thereafter by folded, beaded or otherwise fabricated for securing end walls such as 18 thereto to provide a closed container. The container side-wall may also have any other suitable shape.

In FIGS. 3 and 4 a container structure is illustrated in which a plurality of parallelly extending ducted formations 12' corresponding to 12 of FIG. 1, project inwardly from the inside surface of the sheet metal side wall 10'' as illustrated. The exterior surface of the container is thus retained cylindrical and free of projecting portions such as 12' of FIG. 2. If the ducted formations 12'' are reinforced by means of a filler material such as 16, material or articles retained within the container will be less likely to effect denting or collapsing the inwardly expanded portions of the duct formations 12''. In FIG. 4, an end wall 24 is shown secured to one end of the cylindrical container by over-lapping or folding the end-portion 22 of the side wall 10'' around a cylindrical, longitudinally extending side wall 25 of 24. Notation 19' refers to the flattened end of 10'' while 22 refers to that portion of 19' which is rolled or folded over the edge of 25.

In FIG. 5 is shown a closure similar to the closure 18 of FIG. 2 but modified with a plurality of duct-like formations 26 provided in the end-wall portion 24 thereof to increase the rigidity of the end wall and preferably filled with a bulk material such as 16 to prevent the collapsing of said outwardly protruding inflated wall portions. Notation 27 refers to spaces between the duct-like formations 26 which are not deformed and correspond to the portions 11 of sheet 10 of FIG. 1.

FIG. 6 illustrates a cylindrical side-wall 28 of container of the type hereinabove described having, instead of parallel outwardly deformed duct-like formations, a plurality of parallel formations which are joined by semi-circular formations to provide a single convolving duct in the side wall which may be filled with supporting filler material by means of a single injection tool applied to an opening 30 in 29.

In FIG. 7 the outwardly expanded duct-like formations 33 circumscribe the cylindrical side wall 32 of the container, as illustrated, and are individually inflated by applying an inflation tool either to an opening in the edge of said sheet or a small opening in the wall of said sheet as at 31. Notation 34 refers to abutted or lap-joined portions of opposite edges of the original sheet which is rolled into the cylindrical formation 32 which may be welded, soldered or otherwise joined by conventional means. Here again, the circularly extending formations 33 may be individually filled with a bulk supporting material such as 16 to prevent collapsing thereof when the container is urged against another surface.

In FIG. 8, the grid-like ducted structure illustrated in FIG. 5 is applied to the side wall of a container and comprises a plurality of longitudinally extending duct like formations 26'*a* which cross and interconnect with a plurality of laterally extending formations 26'*b* which run circularly around the cylindrical side wall of the container and are preferably filled with said filler material. Notation 27' refers to those portions of the sheet of metal which comprise the side wall of the container, which are not outwardly deformed and comprise solid

metal sheet portions such as **11** of FIG. 1. The grid-like duct formations are essentially corrugations in the side wall which are internally supported and, as such, substantially stiffen the side wall to permit the use of an original sheet of metal of substantially less thickness than one which is not so deformed or inflated with such formations.

FIG. 9 illustrates an injection tool **40** shown applied to an opening at the edge of a sheet metal panel **10** of the type illustrated in FIG. 1 and operatively coupled to the flat strip-like volume **13'** thereof prior to injecting an expansion fluid into said volume. As stated, said fluid may comprise any suitable expansion fluid which may be removed thereafter or one of said described liquid filler materials which may harden or solidify within the expanded portion of the sheet.

While I have shown and described preferred and alternate forms of my invention, it will be apparent to those skilled in the art that many changes may be made therein without departing from the broad principles herein disclosed. Consequently, I do not wish to be restricted to the particular form or arrangement of parts or sequence of operations herein shown and described, except as limited by my claims.

I claim:

1. A method of fabricating a stiffened hollow metal panel in the form of a single sheet of homogeneous metal having an unjoined interior portion defined and contained between portions of solid metal, said sheet provided with an inlet for fluid pressure to said unjoined portion with said unjoined portion being adapted to contain a fluid under pressure, said method comprising attaching an injection tool to said sheet in sealing engagement with said inlet, injecting a fluent filler material through said tool under sufficient pressure to outwardly expand said unjoined portion, permanently entrapping a predetermined quanity of said filler material within the expanded, unjoined portion of the sheet by collapsing part of the outwardly expanded portion of the sheet and sealing the collapsed part, and thereafter solidifying said fluent material to provide a core member within said expanded unjoined portion, said solidified core member being of sufficient rigidity to provide substantial support for the walls of the unjoined portion of the sheet and to prevent it from becoming inwardly deformed when normal forces are applied to said walls on the exterior of said duct.

2. A method of fabricating a stiffened, hollow metal panel in accordance with claim 1 in which said filler material is a self foaming material which foams into a solid mass conforming to the shape of the walls of said unjoined portion of the sheet.

3. A method of fabricating a stiffened hollow metal panel in accordance with claim 1 whereby the collapsed, unjoined portion of the sheet is sealed by means of pressure welding.

4. A method of fabricating a stiffened hollow metal panel in the form of a single sheet of homogeneous metal having an unjoined interior portion defined and contained between portions of solid metal, said sheet provided with an inlet for fluid pressure to said unjoined portion with said unjoined portion being adapted to contain a fluid under pressure, said method comprising attaching an injection tool to said sheet in sealing engagement with said inlet, injecting an expansion fluid through said tool under sufficient pressure to outwardly expand said unjoined portion of said sheet, said fluid comprising a bulk filler material in a fluent condition, and permanently entrapping a predetermined quantity of said filler material within the expanded, unjoined portion of the sheet by collapsing part of the outwardly expanded portion of the sheet and sealing the collapsed part, and thereafter solidifying said bulk material into a solid mass to provide a core member of sufficient rigidity to offer support for the walls of the unjoined portion of the sheet and to substantially resist its inward deformation when normal forces are applied to said walls.

5. A method of fabricating a stiffened, hollow metal panel in accordance with claim 4 in which the expansion fluid is a thermoplastic material in a molten condition when injected and is adapted to solidify thereafter into a solid core member providing substantial support for the walls of said unjoined portion of said sheet.

6. A method of fabricating a stiffened, hollow metal panel into a reenforced container wall, said panel being in the form of a single sheet of homogeneous metal having an unjoined interior portion defined and contained between portions of solid metal, said sheet provided with an inlet for fluid pressure to said unjoined portion with said unjoined portion adapted to contain a fluid under pressure, said inlet extending from an edge of said sheet, said method comprising deforming said sheet and fabricating it into a cylindrical member with the fluid inlet provided at one end of the cylindrical member, attaching an injection tool to said inlet in sealing engagement therewith, injecting a fluid through said tool under sufficient pressure to outwardly expand said unjoined portion and, permanently entrapping a predetermined quantity of the fluid in the unjoined portion by collapsing the outwardly expanded portion of the sheet and flattening it from the edge of the sheet a marginal distance along the wall of the cylindrical member, and thereafter deforming that portion of the end of the cylindrical member within said marginal distance for receiving and retaining an end wall for said container, the outwardly expanded portion of said sheet serving to substantially enhance the rigidity of said container wall and the entrapped fluid serving to support the outwardly expanded portion of the sheet from inward deformation.

7. A method of fabricating and reinforcing a hollow metal panel made in the form of a sheet of homogeneous metal having an unjoined interior portion defined and contained between portions of solid metal, said sheet provided with an inlet for fluid pressure to said unjoined portion with said unjoined portion being adapted to contain a fluid under pressure, said method comprising outwardly expanding a portion of said sheet adjacent said unjoined portion to form a vein-like duct therein, providing a quantity of a filler material in a fluent state, attaching an injection tool to said sheet in sealing engagement with said inlet, injecting said filler material through said tool to substantially fill said duct, and encapsulating a predetermined quantity of said filler material within said sheet by closing off said duct by collapsing the wall thereof adjacent said inlet and solidifying said filler material into a unitary solid mass which mass substantially conforms to the volume defined within said duct.

8. A method of fabricating a stiffened hollow metal panel made in the form of a sheet of homogeneous metal having an unjoined interior portion defined and contained between portions of solid metal, said sheet provided with an inlet for fluid pressure to said unjoined portion with said unjoined portion being adapted to contain a fluid under pressure, said method comprising outwardly expanding a portion of said sheet adjacent said unjoined portion to form a vein-like duct therein, providing a quantity of a filler material in a fluent state, attaching an injection tool to said sheet in sealing engagement with said inlet, and enclosing a predetermined quantity of said filler material within said sheet by injecting said filler material through said tool to substantially fill said duct and solidifying said filler material within said vein-like duct whereby the walls of the duct are supported and are substantially reinforced against collapsing by said solidified filler material.

References Cited in the file of this patent

UNITED STATES PATENTS

167,688 Puffer ---------- Sept. 14, 1875

(Other references on following page)

7

UNITED STATES PATENTS

820,107	Gerner	May 8, 1906
1,216,733	Rowland	Feb. 20, 1917
1,410,741	Erdle	Mar. 29, 1922
1,843,835	Romeiser	Feb. 2, 1932
1,843,837	Romeiser	Feb. 2, 1932
1,883,003	Sexton	Oct. 18, 1932
1,916,474	French	July 4, 1933
2,154,216	Savage	Apr. 11, 1939
2,331,824	Buckingham	Oct. 12, 1943
2,375,334	Valyi et al.	May 8, 1945
2,416,015	McGuffey	Feb. 19, 1947
2,438,561	Kearsley	Mar. 30, 1948
2,449,478	Herzog	Sept. 14, 1948
2,467,388	Kamborian	Apr. 19, 1949

8

2,469,975	McCloy	May 10, 1949
2,587,116	Clay	Feb. 26, 1952
2,604,870	Blood et al.	July 29, 1952
2,662,273	Long	Dec. 15, 1953
2,668,782	Gross	Feb. 9, 1954
2,690,002	Grenell	Sept. 28, 1954
2,740,188	Simmons	Apr. 3, 1956
2,744,042	Pace	May 1, 1956
2,756,487	Heidorn	July 23, 1956
2,806,812	Merz	Sept. 17, 1957
2,830,800	Gerhardt	Apr. 15, 1958
2,837,180	Armstrong	June 3, 1958
2,857,660	Staples	Oct. 28, 1958
2,859,509	Adams	Nov. 11, 1958
2,863,303	Wurtz	Dec. 9, 1958
2,977,729	Frechmann	Apr. 4, 1961