Dec. 3, 1946. R. H. GEORGE 2,411,963

SIGNAL RECEIVER CIRCUIT

Filed April 28, 1942

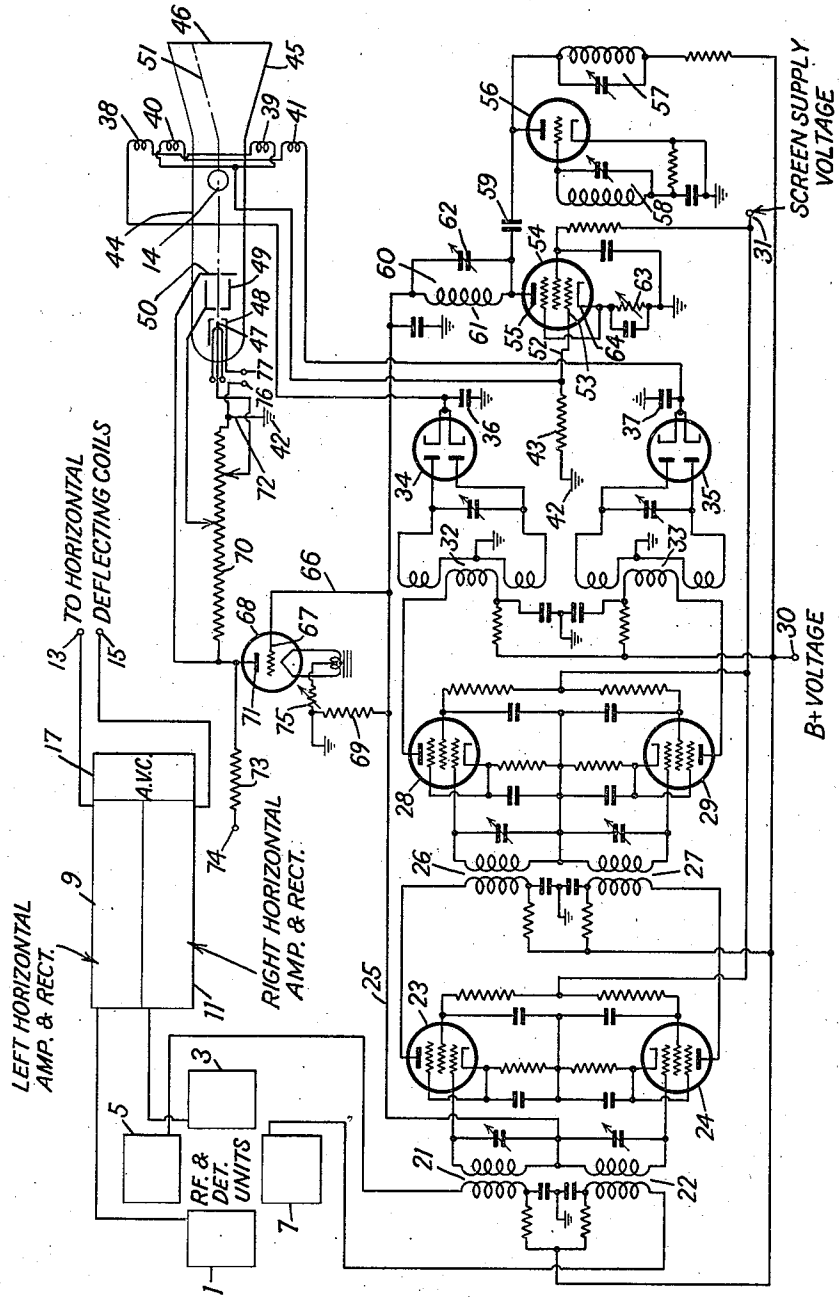

INVENTOR
R. H. GEORGE
BY H. G. Grover.
ATTORNEY

Patented Dec. 3, 1946

2,411,963

UNITED STATES PATENT OFFICE

2,411,963

SIGNAL RECEIVER CIRCUIT

Roscoe H. George, West Lafayette, Ind., assignor to Radio Corporation of America, a corporation of Delaware

Application April 28, 1942, Serial No. 440,820

8 Claims. (Cl. 315—22)

1

The present invention relates to a system by which aircraft or the like may be guided efficiently without sight of the significant areas toward which they are approaching, the areas from which they are departing, and the areas over which they are flying.

In my prior Patent No. 2,216,707 granted October 1, 1940, a system was disclosed by which it was made possible for the pilot of an aircraft to guide its flight path by observing, on the viewing target of a cathode ray tube, bright spots for each marker on the airport or other significant area toward which, over which, or from which the airplane is flying. Provision was made, according to the patent above discussed, whereby, on the viewing screen of the cathode ray tube, the spots representing adjacent significant areas were caused to appear in correct perspective, so that the pilot would, in a sense, actually see at least the boundary indications of the area in question. Further provision was made for controlling the operation of the system so that for changes in signal strength, an efficiently operating automatic volume control would function to maintain the indications upon the viewing tube.

One form of volume control, as applied to the circuit of Patent No. 2,216,707 particularly, was more specifically claimed and disclosed in Patent No. 2,289,493 issued on July 14, 1942, covering a divisional portion of the patent hereinabove referred to.

The present invention is one tending to improve upon the blind landing system disclosed in the aforesaid patent and application, and to provide an automatic gain or volume control for use in connection therewith, but, at the same time, provides an automatic gain control which improves upon the arrangements hereinbefore disclosed, which held the combined signal of the vertical and horizontal direction finding circuits to be of substantially constant value.

The present invention has, however, as one of its primary purposes and objects, that of providing proper observation of the resulting pattern, and at the same time, that of providing so that the ratio of the brilliance of the resultant spots as they produce indications upon the viewing target of the cathode ray tube shall be generally inversely proportional to the actual geographical distance of the observer from the significant area in question.

It has been found in the past that it is difficult to obtain extremely great stability of operation with the types of gain controls heretofore used when the signals change abruptly, as in the case

2

of signals transmitted with the type of blind landing system herein disclosed. Furthermore, with the type of automatic volume control and the general receiver arrangement heretofore disclosed, the true illusions of perspective which are so desirable in connection with a system of blind landing or blind guiding are lost, to some extent, or at least impaired, because with the light points on the target being represented at all times in the same brilliance, irrespective of the actual location of the transmitter with regard to the 'plane, this objection has been overcome to a substantial extent by the present disclosure.

In its broader sense, this disclosure has as its object, that of providing ways and means by which the defects of prior art arrangements are overcome. In this connection, it is possible to overcome the defects hereinabove noted, simultaneously, by providing an automatic gain control which will control the beam voltage on the cathode ray tube in such a manner that the beam voltage is increased with an increase of signal strength. The result is that not only does the increase in the beam voltage at the tube cause an increase in the brilliance of the resultant spot appearing upon the luminescent target of the tube because of the increased velocity of beam impact, but, at the same time, the deflection sensitivity of the cathode ray tube is decreased because of the higher velocity of the beam resulting in a so-called "stiffer" beam, so that the automatic gain control thus inherently tends to provide the perspective features of the illusion. This has the effect then of changing the beam velocity or "stiffness" in such a manner that the automatic volume control need not act as rapidly as those provided by prior art arrangements, and at the same time provision is made so that the automatic volume control can have a substantial voltage change produced and still be effective in its operation.

Other objects and advantages of the invention are those of providing a system which simplifies the arrangements of the prior art and at the same time operates with a greater efficiency than did the arrangements of the prior art. Still other objects and advantages will become apparent to those skilled in the art to which the invention is directed by a reading of the following specification taken in connection with the single figure of drawings which shows a relatively simplified form of receiver circuit arrangement.

Referring now to the drawing, the radio frequency amplifier detector units 1, 3, 5 and 7 are all schematically illustrated. In this group of

amplifiers and detectors it is intended that the units 1 and 3 shall connect respectively to the left side horizontal amplifier and rectifier 9, and 5 and 7 to the right side horizontal amplifier and rectifier 11. The output from these units is adapted to energize horizontal deflecting coils (conventionally represented at 14) connected to terminal points 13 and 15. The horizontal deflecting coils are not shown in detail, but the connection of the amplifiers thereto will be apparent from what is to be indicated in connection with the vertical deflection and also from what has been shown in the aforesaid Patent No. 2,216,707.

Where desired, suitable automatic volume control features, as indicated conventionally at 17, may be incorporated with a horizontal receiving system. Signals to represent the vertical control as received and amplified in the radio frequency amplifier and detector units 5 and 7 are supplied through the transformers 21 and 22 to be amplified in the amplifying tubes 23 and 24. The output energy from these amplifying tubes is then fed by way of further transformers 26 and 27 to two additional stages of amplification represented by the tubes 28 and 29. Operating voltages for these tubes are supplied from the terminal points 30 and 31, as indicated, for the D. C. potentials, and the heater elements of the various tubes are energized from a suitable A. C. source in well known manner (not illustrated). The output signals from the amplifiers 28 and 29 are then fed by way of the transformers 32 and 33 to the rectifying tubes 34 and 35. These tubes may be of any suitable type known in the art, for instance, as the double diode, and identifiable by the type number 6H6.

The heterodyne frequency introduced on the transformers 21 and 22 into the amplifier stages comprising the tubes 23, 24 and 28, 29 is then filtered out by suitable condensers 36 and 37 connected across the output load circuit of the rectifier tubes 34 and 35. Rectified current then passes from the tubes 34 and 35 through the differentially connected magnetic deflecting coils 38, 39 on the one hand, and 40, 41 on the other hand, and returns to ground potential at point 42 by way of the common output or load resistor 43. The coils 38, 39 and 40, 41 are each preferably wound in two or more parts to more accurately superimpose their fields and to prevent distortion. The coils are arranged to surround the neck portion 44 of the cathode ray tube 45, upon the viewing target 46 of which the luminous trace or the luminous spots are to become visible.

Where desired and necessary, suitable well known damping means such as tubes or resistors (not shown) may be connected across the coils 38, 39 and 40, 41 in known manner.

Within the cathode ray tube 45 there is provided the usual electron gun structure comprising the cathode 47, shield 48 which may serve also as a control electrode, an anode element 49 and a suitable second anode element 50, which, together, form the cathode ray beam conventionally indicated by the dot-dash line 51.

At times, when signals are received in the receiver detector units 5 and 7 and output energy flows through the rectifiers 34 and 35 to produce a voltage drop across the resistor 43 caused by the combined signal currents, the resultant voltage drop is applied by way of a conductor 52 to the control electrode 53 of an automatic gain or automatic volume control tube 54. The plate or anode element 55 of tube 54 is supplied only with high frequency voltage from an oscillator tube 56 having the tuned plate circuit comprising the inductance and capacity elements forming the tank circuit 57 and the tuned grid circuit formed from the inductance and capacity elements forming the tank circuit 58, and such energy is supplied to the plate or anode 55 through the coupling condenser 59.

In order to maintain a sufficiently high A. C. plate voltage on the tube 54, a tuned tank circuit 60, comprising the inductance element 61 and the capacity 62, which is made resonant to the frequency of the oscillator tube 56, is connected in series with the plate element 55 of the automatic volume control tube 54. From this connection it can be appreciated that the current rectified in the plate circuit of the tube 54 will be proportional, because of the control exercised by the control electrode 53 thereupon, to the positive potential produced across the load resistor 43 in excess of any adjustable bias that is provided by way of the conventionally indicated variable bias means 63 applied to the cathode 64 of the automatic volume control tube 54.

As is indicated by the conductor 25, which is connected to the center tap of the secondary windings of the transformers 21 and 22, which also connects to the end of the tuned circuit 60, this rectified voltage is applied to one of the first stages of the amplifier, and, also, the same voltage is applied by way of a second conductor 66 to the control electrode 67 of the high voltage tube 68. A resistance 69 is connected between conductor 25 and ground to function as a grid resistor for tubes 23 and 24.

The triode 68 is connected in parallel with the high resistance bleeder 70 which has one terminal thereof connected to the plate or anode 71 of the tube 68, and the other terminal thereof connected to ground 42 by way of the conductor 72. The bleeder resistor 70 is intended to supply the various accelerating potentials to the various electrodes of the cathode ray tube 45, and current to this bleeder-resistor is supplied by way of a resistor 73 which is connected at terminal point 74 to a source of high voltage (not shown).

Since the tube 68 is connected in parallel with the bleeder-resistor 70, it is, of course, quite apparent that the total beam voltage developed within the cathode ray tube 45 may be varied over a very considerable range by any variation in the current passed by the tube 68, to produce a variation in the voltage drop across resistor 73. Accordingly, by a variation of the potential applied to the control electrode 67 of this tube, the current flowing within the tube may be varied within relatively wide limits, so that varying amounts of current are by-passed from the bleeder-resistor 70.

In normal operation, the automatic gain control tube 54 is biased to approximately a cut-off point by means of the variable bias 63. This bias, where desired, may be taken from the main power supply by way of a suitable potentiometer. The adjustable bias 75 for the tube 68 is suitably adjusted so that with no signal being received, the impact point of the cathode ray beam 51 upon the luminescent target 46 of tube 45 is just barely visible, but not of a brightness which even approaches the maximum. Thus, it is apparent that as the signal received in the amplifying and detecting units 5 and 7 and the normal operating levels are obtained, the voltage from the automatic gain control tube 54 is such that a negative bias is applied to the control electrode 67 of the tube 68 so that a decrease in the plate

current drawn by the tube is produced, and this obviously results in a rise in intensity of the luminous points produced by the impact of the beam 51 upon the luminescent target 46, because less current is drawn in the shunt path including the tube 68. This decrease of current through the tube 68 results not only in a bright impact point on the target area 46, but also results in a decrease in sensitivity of deflection of the tube, because it permits a higher accelerating voltage to be applied to form the cathode ray beam 51, and consequently, the electrons of the beam are moving through the tube 45 more rapidly so as to be less subject to a shift in location on the target by any predetermined deflection energy than would an electron beam formed of less rapidly moving electrons.

With the arrangement as it is disclosed, the automatic gain control tube 54 is so arranged that it can permit a considerable rise in the output of the receiver instrumentality, comprising the various amplifiers hereinabove described, with any increases in signal strength, and yet have this rise in the output signal compensated for by the increased stiffness of the beam, that is, the beam is moving so rapidly that the sensitivity of the tube deflection system becomes less.

It is, of course, possible to vary, to some extent, the control arrangement herein disclosed, by replacing the control tube 68 by a tetrode, for instance. Transients which occur across the coils 38, 39 and 40, 41 may be rectified, where desired, and applied, for instance, at the terminal points 76, 77 of the tube 20 in such a way as to cut off the beam 51 developed within the tube during the period of readjustment when changing from a strong signal to a weak one, or the reverse.

Still other modifications may readily be made, provided such modifications fall fairly within the spirit and scope of what is herein set forth and what is claimed in the claims following.

Having described the invention, what is claimed is:

1. Signal reproducing apparatus comprising means to receive and amplify signal energy, a cathode ray tube having included therein means to develop an electron beam and means associated therewith for deflecting the developed electron beam under the control of applied energy, means to rectify the received and amplified signals, means to energize the beam deflecting means under the control of the said rectified signals, an automatic volume control tube, means included within the signal reproducing apparatus for locally generating alternating current energy for energizing said automatic volume control tube, means for applying the rectified energy to the control circuit of said automatic volume control tube, and means controlled by the ouput energy of the automatic volume control tube for varying the velocity of the developed cathode ray beam whereby the intensity of the light developed thereby varies with the variances in the intensity of the received signals.

2. The system claimed in claim 1, wherein the last named control means includes an electron bleeder tube.

3. Signal reproducing apparatus comprising means to receive and amplify signal energy, a cathode ray tube having included therein means to develop an electron beam and means associated therewith for deflecting the developed electron beam under the control of applied energy, means to rectify the received and amplified signals, means to energize the beam deflecting means under the control of the said rectified signals, an automatic volume control tube, means included within the signal reproducing apparatus for locally generating alternating current energy and supplying said energy to the output circuit of said automatic volume control tube, means for applying the received rectified energy to the control circuit of said automatic volume control tube, an inductive means connected to receive the output energy from the automatic volume control tube and to supply said energy to the amplifier means to vary the amplification of the received signals in the amplifier, and electronic means controlled by the output energy of the automatic volume control tube for varying the velocity of the developed cathode ray beam.

4. Signal reproducing apparatus comprising means to receive and amplify signal energy, an oscillation generator for generating energy at a frequency relatively high with respect to that of the signal energy received, a cathode ray tube having included therein means to develop an electron beam and means associated therewith for deflecting the developed electron beam under the control of applied energy, means to rectify the received and amplified signals, means to energize the beam deflecting means under the control of the said rectified signals, an automatic volume control tube, means for supplying the locally generated high frequency energy to the output circuit of said automatic volume control tube, and means for applying the rectified energy to the control circuit of said automatic volume control tube, means responsive to the output energy from the automatic volume control tube for varying the amplification of the received signals in the amplifier, and means controlled by the output energy of the automatic volume control tube for varying the velocity of the developed cathode ray beam, whereby the intensity of the light developed thereby varies with the variances in the intensity of the received signals.

5. Signal reproducing apparatus comprising means to receive and amplify signal energy, a cathode ray tube having included therein electrode means to develop an electron beam and means associated therewith for deflecting the developed electron beam under the control of applied energy, a bleeder resistor to control the voltage supplied to the beam forming electrodes, means to rectify the received and amplified signals, means to energize the beam deflecting means under the control of the said received rectified signals, an automatic volume control tube, means for locally generating alternating current to energize said last named tube, means for applying the rectified energy to the input circuit of said automatic volume control tube to produce an output voltage proportional to the intensity of the received signals, means responsive to the output voltage from the automatic volume control tube for varying the amplitude of deflection of the developed beam and the velocity of the developed cathode ray beam, whereby the intensity of the light developed thereby and the raster dimensions vary with the variances in the intensity of the received signals.

6. Signal reproducing apparatus comprising means to receive and amplify signal energy, a cathode ray tube having included therein means to develop an electron beam and means associated therewith for deflecting the developed electron beam under the control of applied energy, means to rectify the received and amplified sig-

nals, means to energize the beam deflecting means under the control of the said amplified and rectified signals so that the deflection is proportional to signal intensity, an automatic volume control tube, a source of alternating current energy for energizing said automatic volume control tube, means for supplying the rectified signal energy to the control circuit of said automatic volume control tube so that the output energy is a direct current proportional to the received signal intensity, inductive means connected to the output circuit of the automatic volume control tube for supplying the output energy therefrom to the amplifying means so that the amplification of the received signals in the amplifier is varied, and electronic means also controlled by the output energy of the automatic volume control tube for varying the velocity of the developed cathode ray beam, whereby the intensity of the light developed thereby varies with the variances in the intensity of the received signals and the deflection is variable with variances in the rectified received energy.

7. A signal reproducing apparatus comprising means to receive and amplify independently of each other two time separated versions of signal energy of a predetermined character, a cathode ray tube having means therein for developing a cathode ray beam and means for deflecting the said developed beam under the control of applied energy, means for rectifying and combining the two received signals, means to vary the deflection in accordance with difference in intensity of the two rectified signals, an automatic volume control tube, means to generate alternating current energy to energize said last named tube, means

to supply the said rectified and combined signal energy to said last named tube so that the output energy therefrom is a direct current of an intensity proportional to the received signal intensity, means to supply said direct current to the amplifying means to control the amplification level thereof and means to simultaneously control the intensity of the cathode ray beam developed so that the cathode ray beam intensity is substantially proportional to the received signal intensity.

8. A signal reproducing device comprising a pair of means to receive and amplify independently of each other two like time separated versions of signal energy, a cathode ray tube having included therein means for developing a cathode ray beam, and means associated therewith for deflecting the cathode ray beam under the control of applied energy, rectifying means for rectifying each of the amplified signals, means for differentially applying the output of the rectifying means to the deflecting means for energizing said means in accordance with the differential output of the said two rectifying means, automatic volume control means connected to develop biasing voltages proportional to the received signal intensity, means for controlling the amplification level of the amplifying means in accordance with the voltage output of the automatic volume control means, and means for varying the velocity of the cathode ray beam developed proportional to the output of the automatic volume control means, whereby the light initiated by the impact of the cathode ray beam upon a target element is of an intensity proportional to the signal strength.

ROSCOE H. GEORGE.