(No Model.) 3 Sheets—Sheet 1.

G. J. BEDFORD.

MAIL POUCH.

No. 384,736. Patented June 19, 1888.

Fig. 1.

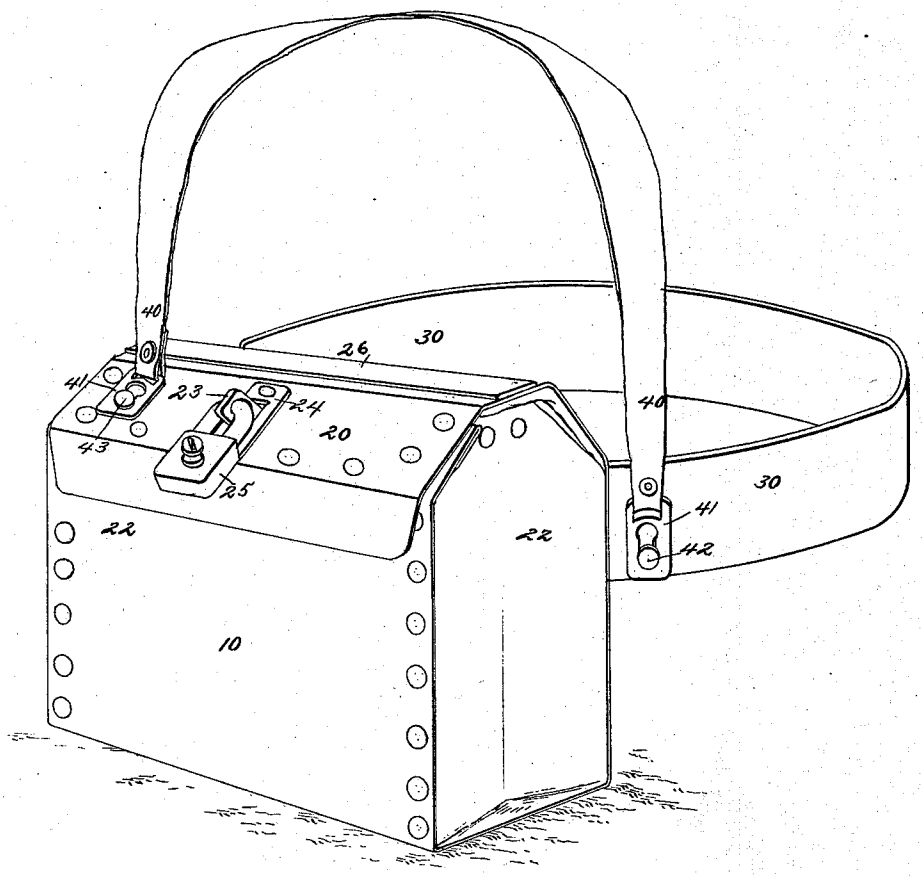

WITNESSES:

W. R. Davis.

C. Sedgwick.

INVENTOR:

G. J. Bedford.

BY Munn & Co

ATTORNEYS.

N. PETERS. Photo-Lithographer, Washington, D. C.

(No Model.) 3 Sheets—Sheet 2.

G. J. BEDFORD.

MAIL POUCH.

No. 384,736. Patented June 19, 1888.

Fig. 2.

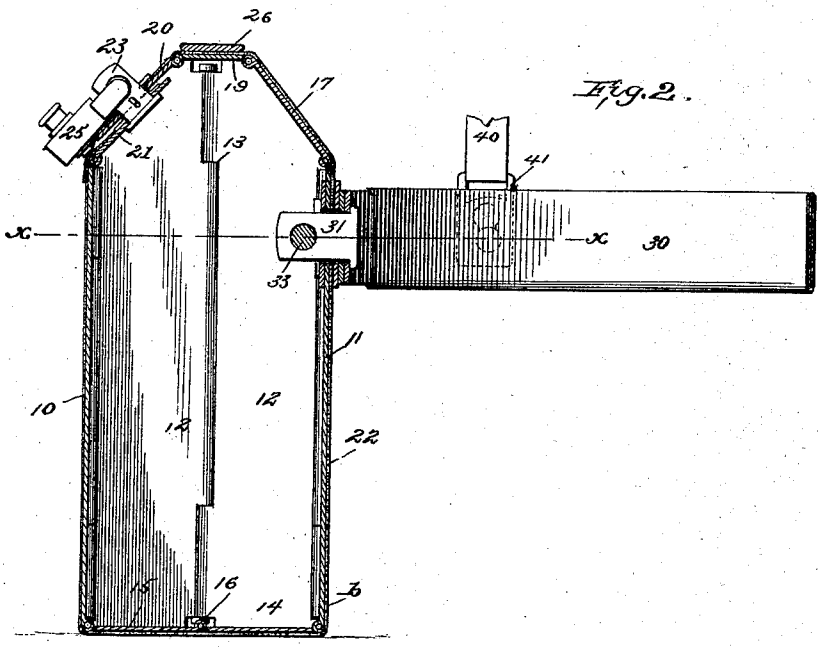

Fig. 2a.

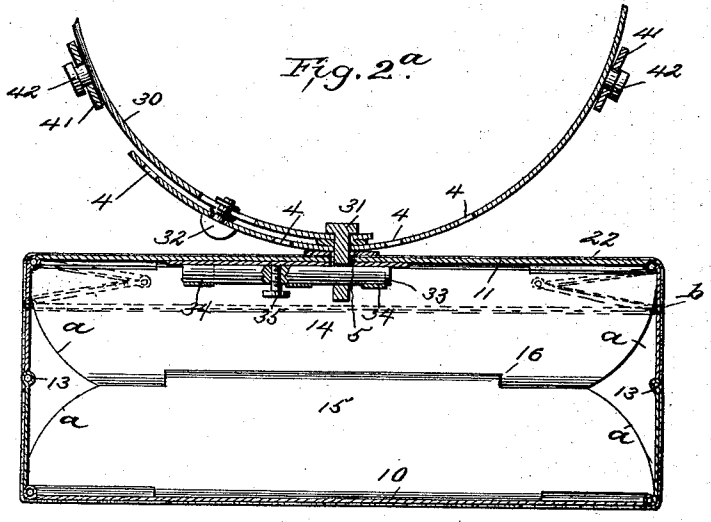

WITNESSES:

W. R. Davis.

C. Sedgwick.

INVENTOR:

G. J. Bedford.

BY Munn & Co

ATTORNEYS.

N. PETERS, Photo-Lithographer, Washington, D. C.

(No Model.) 3 Sheets—Sheet 3.

G. J. BEDFORD.

MAIL POUCH.

No. 384,736. Patented June 19, 1888.

Fig. 3.

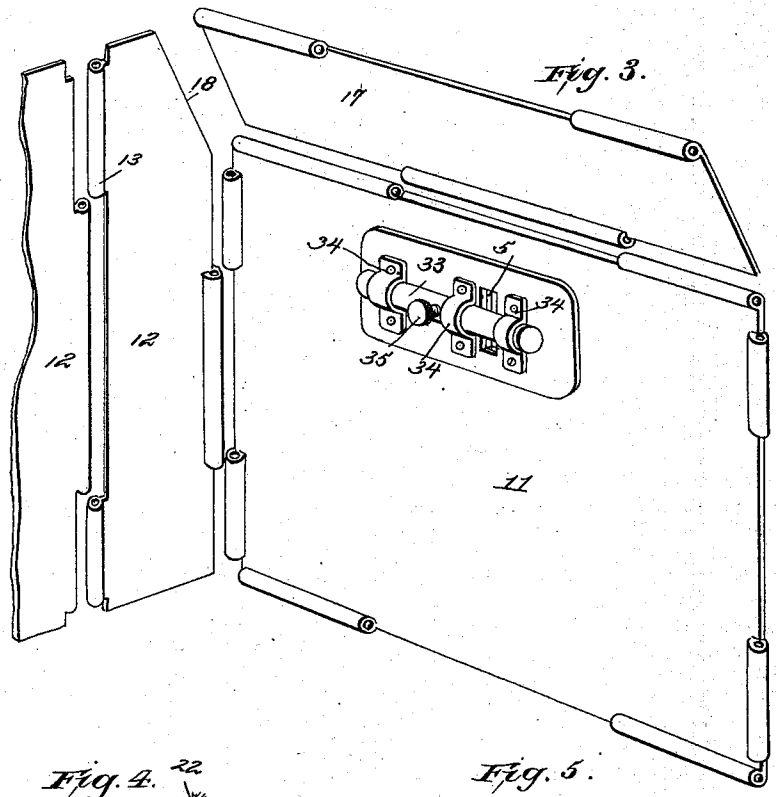

Fig. 4.

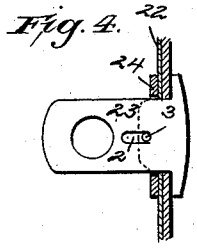

Fig. 5.

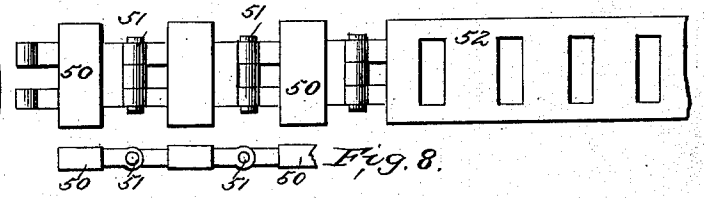

Fig. 8.

Fig. 6.

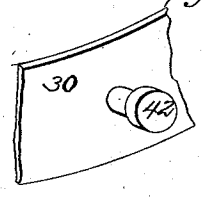

Fig. 7.

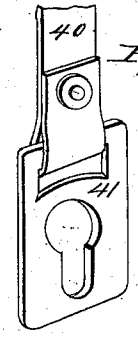

WITNESSES:

W. R. Davis.
C. Sedgwick

INVENTOR:

G. J. Bedford.

BY Munn & Co

ATTORNEYS.

N. PETERS, Photo-Lithographer, Washington, D. C.

UNITED STATES PATENT OFFICE.

GEORGE J. BEDFORD, OF ANAMOSA, IOWA, ASSIGNOR TO AMELIA R. LOCKWOOD, OF EAST ORANGE, NEW JERSEY.

MAIL-POUCH.

SPECIFICATION forming part of Letters Patent No. 384,736, dated June 19, 1888.

Application filed October 29, 1887. Serial No. 253,678. (No model.)

To all whom it may concern:

Be it known that I, GEORGE J. BEDFORD, of Anamosa, in the county of Jones and State of Iowa, have invented a new and Improved Mail-Pouch, of which the following is a full, clear, and exact description.

The object of this invention is to provide for the safe transport of valuable packages—such, for instance, as registered letters and securities—the invention consisting, essentially, of a metallic-lined pouch that is arranged for connection with a metallic belt that is to be placed about the person of the messenger intrusted with the securities, the pouch itself being provided with any proper form of lock, all as will be hereinafter more fully described, and specifically pointed out in the claims.

Reference is to be had to the accompanying drawings, forming a part of this specification, in which similar figures of reference indicate corresponding parts in all the views.

Figure 1 is a perspective view of my improved metal pouch. Fig. 2 is a central cross-sectional elevation of the pouch. Fig. 2ª is a sectional plan view taken on line *x x* of Fig. 2. Fig. 3 is a perspective view illustrating the construction and arrangement of a portion of the plates with which the pouch is lined, the plates, however, being represented as they appear when separated the one from the other. Fig. 4 is a detail view illustrating the construction and arrangement of the eyebolt that is carried by the front plate of the pouch, said plate, its covering, and the washer arranged in connection with the bolt being shown in section. Fig. 5 is a detail view illustrating the construction of a modified form of belt. Fig. 6 represents a section of the belt which is provided with a stud. Fig. 7 is a detail view of one of the slotted plates carried by the shoulder-strap, the plate being arranged to engage with a stud represented in Fig. 6, and Fig. 8 is an edge view of the belt illustrated in Fig. 5.

In constructing such a pouch as the one illustrated in the drawings above referred to I provide a front plate, 10, a rear plate, 11, and sectional end plates, 12, all of which plates are connected by hinge-joints, as is clearly shown in the drawings, the connected plates forming the front, back, and ends of the pouch, the sectional end plates being connected by a central hinge-joint, 13. The bottom of the pouch is formed of plates 14 and 15, that are connected by a hinge-joint, 16, the outer edges of the plates 14 and 15 being hinged, respectively, to the rear plate, 11, and the front plate, 10.

To the rear plate, 11, I hinge a plate, 17, which is equal in width to the inclined rear edges, 18, of the rear plates, 12, and to the plate 17, I hinge a plate, 19, which in turn carries a plate, 20, the plate 20 constituting the forward outer flap of the cover, the under forward flap of the cover being formed by a plate, 21, that is hinged to the plate 10, this plate 21 being arranged to fold against the forward inclined edges of the forward plates, 12, when the pouch is closed. The edges of the plates 14 and 15 are rounded off, as shown at *a*.

The plates above described constitute the main frame or body of the pouch, which frame or body is covered with leather or other proper material, as shown at *b*, and, if desired, the inside of the pouch may be also covered. The inner covering, however, is not shown in the drawings forming part of this specification.

When the pouch is to be put in use, the parts are adjusted, as represented in full lines in the drawings; but when not in use the sectional end plates, 12, and the bottom plates, 14 and 15, may be turned upon themselves, and the pouch may be folded to the position represented by dotted lines in Fig. 2ª.

In order that the pouch may be locked I pass an eyebolt, 23, through an aperture formed in the plate 21, and also through a washer, 24, that is placed outside of the covering 22, with which the plate 21 is faced. This eyebolt is formed with a slot, 2, through which there is passed a pin, 3, which is held by upwardly-extending bosses that are formed on the washer 24, as indicated in Fig. 4. The plate 20 is provided with an aperture through which the bolt 23 is passed in order that it may be engaged by the bolt of a padlock, 25, or any other proper locking device could be employed in connection with the pouch.

To the plate 19, I secure a loop, 26, that may be used in the handling of the pouch when it is not secured to the person; but for additional safety I prefer that the pouch be connected to a metallic belt made of hoop-steel, as shown in Figs. 1, 2, and 2ª, or of chain-links, as represented in Figs. 5 and 8.

The belt shown in the figures, made from hoop-steel, consists of a spring-band, 30, bent to circular form and provided at one end with an eyebolt, 31, and a turn-button, 32, the turn-button being mounted in a slot that is formed in the body of the hoop, the other end of the hoop being formed with a number of apertures, 4, adapted to receive the extending end of the eyebolt 31.

Upon the inner face of the rear plate, 11, I mount a bolt, 33, which is held to the plate by keepers 34, and in this bolt I form a threaded aperture in which there is fitted a thumb-screw, 35. An aperture, 5, is formed in the rear plate, 11, through which the eyebolt 31 is passed to be engaged by the bolt 33, as represented in Fig. 2ª, the bolt 33 being locked to place after having been passed through the eyebolt 31 by turning the thumb-screw 35 forward, so that the bolt will be forced outward against its keepers, to be held in position by frictional contact with said keepers.

In practice the belt 30 is placed about the body of the messenger and the eyebolt 31 is passed through such of the apertures 4 as will bring the belt to position so that it will fit the wearer. The turn-button 32 is then passed through one of the apertures near the end of the hoop and turned so as to hold the end of the hoop down against the body thereof. The eyebolt 31 is then passed through the aperture 5 and brought into engagement with the bolt 33, as hereinbefore described.

In order that the weight of the pouch and its contents may be conveniently supported, I provide a shoulder strap or band, 40, to the ends of which there are secured apertured metallic plates 41, the apertures in said plates being arranged for engagement with studs 42, that are carried by the belt 30, the strap 40 in practice being passed over the shoulders of the wearer and brought into engagement with the studs 42 of the belt 30, or one of the plates may be brought into engagement with one of the studs 42 while the other is brought into engagement with the stud 43, that is carried by the plate 20, this being the arrangement shown in Fig. 1.

In Fig. 5, I illustrate a construction wherein the chain is made up of links 50, that are connected by hinge-joints 51, said links carrying at one end a slotted or apertured plate, 52, and at the other a plate having an eyebolt similar to the eyebolt 31. This chain belt is more flexible than the belt made of hoop-steel, and by properly constructing the hinge-joints it may be made just about as strong as the hoop-belt. In practice the plates forming the body of the pouch should be made of steel.

Having thus fully described my invention, I claim as new, and desire to secure by Letters Patent—

1. The combination, with a pouch, of a metal belt provided with apertures at one end, an eyebolt carried at the other end of the belt and arranged to pass through one of the apertures of the belt, and a bolt carried by the pouch, said bolt being mounted to cross an aperture formed in the pouch and arranged to engage the eyebolt when such eyebolt is passed through the pouch-aperture, substantially as described.

2. The combination, with a metal-lined pouch, of a metal belt provided with apertures at one end, an eyebolt carried at the other end of the belt and arranged to pass through one of the apertures of the belt, and a bolt carried by the pouch and arranged to engage with the eyebolt, substantially as described.

3. The combination, with a metal-lined pouch, of a metal belt provided with apertures at one end, an eyebolt carried at the other end of the belt and arranged to pass through one of the apertures of the belt, a bolt carried by the pouch and arranged to engage with the eyebolt and a thumb-screw arranged in connection with the bolt, substantially as described.

4. The combination, with a metal-lined pouch, of a metal belt provided with apertures at one end, an eyebolt and a turn-button carried at the other end of the belt and arranged to pass through the apertures of the belt, and a bolt carried by the pouch and arranged to engage with the eyebolt, substantially as described.

GEORGE J. BEDFORD.

Witnesses:
A. C. MERRILL,
D. G. MCKAY.