PCT WORLD INTELLECTUAL PROPERTY ORGANIZATION
International Bureau

INTERNATIONAL APPLICATION PUBLISHED UNDER THE PATENT COOPERATION TREATY (PCT)

(51) International Patent Classification 6 : B23K 26/06	A1	(11) International Publication Number: WO 96/33839
		(43) International Publication Date: 31 October 1996 (31.10.96)

(21) International Application Number: PCT/US96/04322

(22) International Filing Date: 29 March 1996 (29.03.96)

(30) Priority Data:
08/429,302 26 April 1995 (26.04.95) US

(71) Applicant: MINNESOTA MINING AND MANUFACTURING COMPANY [US/US]; 3M Center, P.O. Box 33427, Saint Paul, MN 55133-3427 (US).

(72) Inventors: FLEMING, Patrick, R.; P.O. Box 33427, Saint Paul, MN 55133-3427 (US). OUDERKIRK, Andrew, J.; P.O. Box 33427, Saint Paul, MN 55133-3427 (US). BORCHERS, Eric, J.; P.O. Box 33427, Saint Paul, MN 55133-3427 (US).

(74) Agents: OUYANG, Michael, K. et al.; Minnesota Mining and Manufacturing Company, Office of Intellectual Property Counsel, P.O. Box 33427, Saint Paul, MN 55133-3427 (US).

(81) Designated States: AL, AM, AT, AU, AZ, BB, BG, BR, BY, CA, CH, CN, CZ, DE, DK, EE, ES, FI, GB, GE, HU, IS, JP, KE, KG, KP, KR, KZ, LK, LR, LS, LT, LU, LV, MD, MG, MK, MN, MW, MX, NO, NZ, PL, PT, RO, RU, SD, SE, SG, SI, SK, TJ, TM, TR, TT, UA, UG, UZ, VN, ARIPO patent (KE, LS, MW, SD, SZ, UG), Eurasian patent (AM, AZ, BY, KG, KZ, MD, RU, TJ, TM), European patent (AT, BE, CH, DE, DK, ES, FI, FR, GB, GR, IE, IT, LU, MC, NL, PT, SE), OAPI patent (BF, BJ, CF, CG, CI, CM, GA, GN, ML, MR, NE, SN, TD, TG).

Published
With international search report.

(54) Title: METHOD AND APPARATUS FOR STEP AND REPEAT EXPOSURES

(57) Abstract

An excimer laser projection ablation system provides less than the necessary amount of illumination to a substrate to completely ablate a structure. The system then moves the substrate a distance less than the image field at the substrate and provides an additional level of illumination. The system continues to move the substrate and provides additional illumination until the structures are fully ablated. The method and system for performing an improved step and repeat process preferably are used to create uniform repeating structures or three-dimensional structures.

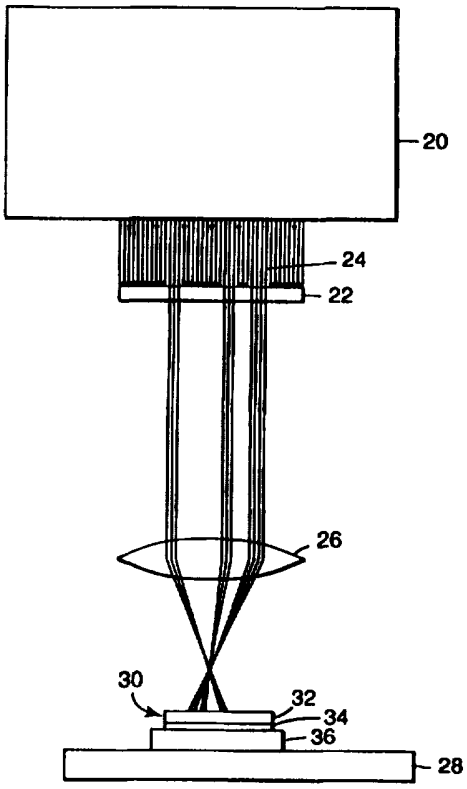

FOR THE PURPOSES OF INFORMATION ONLY

Codes used to identify States party to the PCT on the front pages of pamphlets publishing international applications under the PCT.

AM	Armenia	**GB**	United Kingdom	**MW**	Malawi
AT	Austria	**GE**	Georgia	**MX**	Mexico
AU	Australia	**GN**	Guinea	**NE**	Niger
BB	Barbados	**GR**	Greece	**NL**	Netherlands
BE	Belgium	**HU**	Hungary	**NO**	Norway
BF	Burkina Faso	**IE**	Ireland	**NZ**	New Zealand
BG	Bulgaria	**IT**	Italy	**PL**	Poland
BJ	Benin	**JP**	Japan	**PT**	Portugal
BR	Brazil	**KE**	Kenya	**RO**	Romania
BY	Belarus	**KG**	Kyrgystan	**RU**	Russian Federation
CA	Canada	**KP**	Democratic People's Republic of Korea	**SD**	Sudan
CF	Central African Republic			**SE**	Sweden
CG	Congo	**KR**	Republic of Korea	**SG**	Singapore
CH	Switzerland	**KZ**	Kazakhstan	**SI**	Slovenia
CI	Côte d'Ivoire	**LI**	Liechtenstein	**SK**	Slovakia
CM	Cameroon	**LK**	Sri Lanka	**SN**	Senegal
CN	China	**LR**	Liberia	**SZ**	Swaziland
CS	Czechoslovakia	**LT**	Lithuania	**TD**	Chad
CZ	Czech Republic	**LU**	Luxembourg	**TG**	Togo
DE	Germany	**LV**	Latvia	**TJ**	Tajikistan
DK	Denmark	**MC**	Monaco	**TT**	Trinidad and Tobago
EE	Estonia	**MD**	Republic of Moldova	**UA**	Ukraine
ES	Spain	**MG**	Madagascar	**UG**	Uganda
FI	Finland	**ML**	Mali	**US**	United States of America
FR	France	**MN**	Mongolia	**UZ**	Uzbekistan
GA	Gabon	**MR**	Mauritania	**VN**	Viet Nam

METHOD AND APPARATUS FOR STEP AND REPEAT EXPOSURES

Field of the Invention

The present invention relates generally to laser ablation technology. More particularly, it relates to an improvement to step and repeat exposure processes using excimer laser ablation of substrates to improve the uniformity of repeating microstructures on an ablated substrate or to create three-dimensional microstructures on an ablated substrate.

Background of the Invention

Laser ablation has long been used in the ophthalmic and semiconductor fields. In the past, for example, photolithographic processes were used to produce the vias that connect different levels of circuitry of semiconductor chips. Laser ablation processes have replaced the photolithographic processes in some instances and are now used for ablating the via patterns. In the optical field, on the other hand, laser ablation has been used for shaping contact lenses, such as smoothing their surfaces.

Many obstacles are present when using laser ablation processes, such as spot writing with a shaped beam, shadow mask systems, projection mask systems and phase mask systems. For those systems that use a mask, it is expensive and inefficient to provide perfectly uniform illumination of the mask. The distributions of the beam intensity from an excimer laser is roughly rectangular in cross-section. An ideal beam has a top-hat profile in the long dimension and a Gaussian cross-section in the short dimension. The non-uniform beam intensity can create nonuniformities in an ablated substrate. Figure 1a is a graphical representation of the energy profile of a typical excimer laser beam in cross-section. While the intensity of the beam is substantially uniform in the center portions of the beam cross-section, the intensity of the beam drops off near the beam edges. The nonuniformity of the beam intensity can translate to nonuniformities in the ablated materials, such as less material removal and formation of spurious posts due to contamination in the material being ablated in lower intensity areas

and straighter walls in the higher intensity areas. Therefore, methods and apparatuses have been developed to overcome the nonuniformities inherent in the beam intensity.

Beam homogenizer systems have been developed to improve the uniformity of the cross-section of laser beams. Figure 1b is a graphical representation of the energy profile of the excimer laser beam shown in Figure 1a in cross-section after passing through a beam homogenizer. Beam homogenizers output a substantially constant energy beam across a mask plane, thereby providing more even ablation across a substrate. Beam homogenizer systems included in laser ablation systems increase the cost of the laser ablation system, however, and therefore can be undesirable in lower cost systems. Moreover, beam homogenizer systems are less efficient than non-homogenized beams due to energy losses in the system and require more pulses to ablate the same amount of material because of the lower pulse energy.

Laser ablation systems, such as projection systems utilizing lenses, have additional problems creating uniform morphologies. Projection laser ablation systems use a projection lens to transfer an image of the desired pattern from the mask plane to the substrate plane. This image transfer is never perfect due to spherical and chromatic aberrations, coma, astigmatism, field curvature and distortion, and other higher order effects on the wavefront. These distortions can cause nonuniformities in the ablated substrates, thereby reducing the precision available to create uniform, micromachined surfaces. To partially overcome lens aberrations, higher quality, higher cost lenses may be used in projection systems. These high cost lenses, however, cannot be justified in all projection systems.

The laser ablation process can generate a substantial amount of debris from the ablated substrate, thereby causing additional obstacles to precision machining or uniform morphologies in the ablated substrate. When features are closely spaced and a large area is to be covered, some debris typically falls on areas that are to be later ablated. Substrates that are covered with a large amount of debris do not have the same ablation characteristics as clean substrates or substrates that are covered with only a small amount of debris. Particularly when ablating larger features, the generated debris can cause interference with the current or subsequent ablation sites. Debris removal systems have been developed for use with laser ablation systems to remove the debris remaining on the substrates to be ablated to minimize the amount of debris the laser

beam must penetrate to sufficiently ablate the surface of the substrate. One method of debris removal utilizes assist gases, such as helium or oxygen. Performing the ablation in a vacuum also reduces debris, but further adds complexity to the system. With assist gases or vacuums incomplete debris removal can occur, particularly with larger features, thereby resulting in residual formations.

Because a very high fluence is required to ablate material from a substrate, the area of the image field at the substrate is typically quite small, on the order of less than one square centimeter. Typical step and repeat processes allow production of a large number of images, the images being far removed from each other, such that debris produced by the process and nonuniformities between the images are not an issue. In order to cover large areas on a substrate, however, step and repeat processes or a mask scanning operations may be performed. In a step and repeat process, a first image is exposed to the necessary number of laser beam pulses such that the substrate is ablated to the desired depth. Then, the substrate is moved such that an unexposed area of the substrate is in the image field, preferably so a second image may be exposed immediately adjacent the first image. This process is repeated until the desired area is covered with the repeated images.

When step and repeat processes are used to cover large areas of a substrate, however, nonuniformities become an issue because it is difficult to hide the intersections between adjacent images over a large area of the substrate. Figure 2 shows an enlarged perspective view of a substrate having a pattern created with step and repeat imaging. The repeating pattern of square holes on the substrate may be produced by ablating adjacent square images having the repeating pattern of square holes. Intersection point 10 is the intersection of four images. In one image, walls 11 underexposed, thereby leaving polyimide residue on the top of the walls. In a second image, walls 12 were overexposed, thereby removing too much polyimide and leaving incomplete walls. Very slight differences in a pattern caused by, for example, the aforementioned nonhomogeneous beam profile, minor distortion in the image or attempting to ablate through the debris left by ablating the adjacent image is visible to the human eye. In mask scanning operations, a large area mask, with a pattern on it corresponding to the entire area to be covered is used and the mask is moved

synchronously with the substrate. These large area masks, however, are very expensive to create.

Laser ablation systems can also be used for micromachining. Microelectronics and micromechanics require production technologies to produce small structures and small parts. Laser ablation is well suited for precision production of small, precision structures, particularly applications requiring drilling, cutting, material removal and surface modification of materials. Excimer lasers have been used to machine metals, ceramics and polymers when small structures are required. For example, in a spot writing system, an excimer laser may be used as a stylus, where the laser beam has an ablating resolution of one micron. While this type of single spot writing system allows ablation of three-dimensional structures, the laser typically operates around 2000Hz. The rate at which the surface area is ablated is slow, thereby making this method impractical for covering large areas.

To ablate larger three-dimensional geometries, the three-dimensional geometry may be separated into slices parallel to the x-y plane. The thickness of each slice is equivalent to the removal depth of one or more laser pulses. Beginning with the largest mask, the surface associated with each slice is removed with a single mask. The process is continued with smaller and smaller mask size until the three-dimensional geometry has been created. The aforementioned method of creating three-dimensional structures are either expensive, have a limited application or are inefficient. For example, precision control mechanisms exist for moving the laser beam or the mask to precisely position the beam or mask relative to the substrate. Such accurate positioning allows precise ablation of a slice of the three-dimensional structure. Other costly and inefficient methods place the entire pattern on a single mask and shutter off unused portions of the mask, thereby not using all the light from the laser or require multiple masks to create the entire three-dimensional pattern.

Summary of the Invention

The present invention provides a method and apparatus for exposing a substrate to patterned radiation. The methods of the present invention improve the uniformity of repeating structures on a substrate as well as allow production of three-dimensional structures. One method modifies a step and repeat process by providing

less than the necessary level of illumination to the substrate to create a structure and providing the remaining amount of illumination at one or more later times. A second method modifies a step and repeat process by moving a substrate a distance less than the image field size between each exposure of the substrate to illumination. Alternatively, the second method exposes an area of the substrate to light passing through a plurality of portions of a patterned mask, each exposure occurring at different times. A system is also described for performing the methods.

Brief Description of the Drawings

The present invention will be more fully described with reference to the accompanying drawings wherein like reference numerals identify corresponding components, and:

Figure 1a is a graphical representation of the energy profile of a typical excimer laser beam in cross-section;

Figure 1b is a graphical representation of the energy profile of the excimer laser beam in Figure 1a after passing through a beam homogenizer;

Figure 2 is a picture of a scanned electron-beam microscope photograph of the intersection of four images of repeating structures using a step and repeat process;

Figure 3 shows the system of the present invention;

Figure 4 shows an example of a mask pattern having a repeating square hole pattern;

Figure 5 shows how the size of a mask pattern corresponds with the image field size at the substrate;

Figure 6 shows a first method of overlapping repeating features on a mask at an area of the substrate;

Figure 7 shows a second method of overlapping repeating features on a mask at an area of the substrate;

Figure 8 is a picture of a scanned electron-beam microscope photograph of a plurality of repeating structures created using the method of the present invention;

Figure 9 shows four quadrants of an image field, each quadrant having different fluence;

Figure 10a-10d show how the present invention improves the uniformity of ablated structures;

Figure 11 shows a mask used for creating three-dimensional structures;

Figure 12a-12d shows how the mask shown in Figure 11 can be used to create three-dimensional structures; and

Figure 13 is a picture of a scanned electron-beam microscope photograph of lenslets using the methods of the present invention.

Detailed Description of a Preferred Embodiment

In the following detailed description of the preferred embodiment, reference is made to the accompanying drawings which form a part hereof, and in which is shown by way of illustration a specific embodiment in which the invention may be practiced. It is to be understood that other embodiments may be utilized and structural changes may be made without departing from the scope of the present invention.

Figure 3 shows a laser ablation system of the present invention. The laser ablation system is preferably a laser projection ablation system utilizing a patterned mask, although a shadow mask system or phase mask system could be used. Projection imaging laser ablation is a technique for producing very small parts or very small structures on a surface of a substrate, the structures having sizes on the order of between one micron to several millimeters, whereby light is passed through a patterned mask and the pattern is imaged onto a substrate. While the present system is described using lasers, the illumination provided by the laser can be any kind of light, such as infrared or x-ray sources. Moreover, the present invention can be applied using sources that produce other types of radiation. Material is removed from the substrate in the areas that receive light.

Laser 20 is preferably a KrF excimer laser emitting a beam with a short wavelength of light, preferably on the order of 248 nm. Those skilled in the art will readily recognize that any type of excimer laser may be used, such as F_2, ArF, KrCl, or XeCl type excimer lasers. An excimer laser is preferred because an excimer laser can resolve smaller features and causes less collateral damage than lasers such as CO_2 lasers, which emit beams with a wavelength of approximately 10,600 nm and can be used with most polymers and ceramics that are transparent to lasers that are usually used for

processing metals, such as Neodymium doped Yttrium Aluminum Garnet (Nd:YAG) lasers. Excimer lasers are further preferred because at UV wavelengths, most materials, such as polymers, have high absorption. Therefore, more energy is concentrated in a shallower depth and the excimer laser provides cleaner cutting. Excimer lasers are pulsed lasers, the pulses ranging from 5-300 nanoseconds.

Mask 22 is preferably a patterned mask having pattern 24 manufactured using standard semiconductor lithography mask techniques. The patterned portions of mask 22 must be opaque to UV light while the support substrate must be transparent to UV light. In one embodiment, the patterned portions are preferably aluminum while the support substrate for mask 22 is preferably fused silica (SiO_2). Fused silica is preferred as a support material because it is one of the few materials that is transparent in the mid and far UV wavelengths. Aluminum is preferred as a patterning material because it reflects mid-UV light. Even more preferred is a fused silica with a patterned dielectric stack on top of it.

Imaging lens 26 may be a single lens or an entire optical system consisting of a number of lenses and other optical components. Imaging lens 26 projects an image of the mask, more specifically, an image of the pattern of light passing through the mask onto the surface of substrate 30. Lenses in optical systems have an optimal magnification of conjugate ratio, the conjugate ratio being the distance from the lens to the mask divided by the distance of the lens to the image. Substrate 30 may be any of a number of metals, ceramics, or polymers. Some inexpensive and clear polymers include polyimide, polyester, polystyrene, polymethymethacrylate and polycarbonate. Substrate 30 may also be a combination of materials, such as shown in Figure 3, where top layer 32 of substrate 30 is polyimide and bottom layer 34 is copper. Bottom layer 34 may be included for purposes such as an etch stop or to provide support for patterns that would not support themselves if cut through top layer 32.

Table 28 supports and positions ablated substrate 30. Substrate 30 is fixedly supported to table 28, such as by vacuum chuck 36, static electricity, mechanical fasteners or a weight. Table 28 can position substrate 30 by moving substrate 30 on the x, y and z axes as well as rotationally, such as along the z axes. Table 28 can move substrate 30 in steps down to approximately 5 nm, and more typically, approximately 0.1 microns, reproducible to an accuracy of approximately 100nm. This reproducibility

allows a step and repeat process to be used with the patterns to allow ablation of larger areas, on the order of many feet, on substrate 30. Table 28 may be manually positioned or, more preferably, computer controlled. A computer controlled table allows preprogramming of the movement of the table as well as possible synchronization of the table movement with the emission of light from the laser. The table can also be manually controlled, such as with a joystick connected to a computer.

A system similar to the system shown in Figure 3 can be used to create a repeating pattern using a step and repeat operation that overcomes nonuniformities caused by system limitations such as nonhomogeneous beam profiles, lens distortions and insufficient debris removal. The method of the present invention overcomes these problems to create uniform, repeating structures by exposing each predetermined area on a substrate to many different areas in the image field, thereby allowing the substrate to be exposed to variations in the beam strength and lens distortions within the image field. Moreover, the method does not produce a large amount of debris in each step of the step and repeat operation, thereby preventing a large accumulation of debris and overcoming the problem of debris interference in the imaging process.

The mask used with the method of the present invention preferably includes a repeating pattern to be ablated in the substrate for creating a uniform, repeating pattern. While a single structure can be created in some embodiments of the present invention, it is preferable to have at least two full patterns and more preferable to have a significantly larger number of features on the mask. Figure 4 shows an example of a mask pattern that could be used to ablate a pattern of square holes in a substrate. Those skilled in the art will readily recognize that a number of different shapes and geometries can be repeated in a mask pattern, such as channels, circles, polygons, letters and numbers. Those skilled in the art will further appreciate that the level of repetition need not be to the extent shown in Figure 4.

The method of the present invention can include two basic process modifications of a typical step and repeat process, each modification able to be used alone, together or in combination with step and repeat process steps. The first modification consists of providing less than the required dose of light to a first image position on the substrate before moving to a subsequent image position on the substrate. This will result in incomplete ablation of the pattern at the first image position. When a

pattern is chosen, the number of laser beam pulses necessary to ablate material from the substrate to a sufficient depth to create each feature is determined. For example, if the pattern requires ablating through 50 micron thick polyimide using a KrF excimer laser with a fluence of 800 mJ/cm^2, the excimer laser will ablate approximately 0.5 microns of polyimide per pulse. For such a pattern, approximately 100 pulses are necessary to remove sufficient polyimide to reach the required depth. In the first modification to typical step and repeat processes, rather than ablating the entire pattern, which would require 100 pulses from the excimer laser, some fraction of 100 pulses would be provided at a first step. Once the number of necessary pulses to fully ablate a structure is determined, the number of pulses provided at each step is determined. For example, a single pulse could be provided at a first step. Thus, an additional 99 pulses would subsequently be provided at later times to fully ablate the desired structure in that area of the substrate. The exposure is later finished when the same region of the substrate is exposed with light one or more times by the same image pattern with light passing through the same portion of the mask, the same image pattern with light passing through a different portion of the mask, or a different image pattern with light passing through a different portion of the mask. When the same image pattern is used with light passing through a different portion of the mask, the mask must have a pattern of repeating features to create a uniform structure on the substrate. When a different image pattern is used with light passing through a different portion of the mask, the mask must have features that correspond with the incompletely exposed areas of the substrate to create three-dimensional structures. When the exposure is finished with overlapping image patterns, more than one image position is used to fully expose a particular region of the substrate to create the desired structure.

The required strength, or energy/pulse (mJ), of each exposure depends on the substrate material, the desired depth of the ablation, the efficiency of the beam delivery system, and the desired wall angle. A typical excimer laser has a maximum energy of one J/pulse, with a 50% efficiency in the beam delivery system. For a polymer, for example, the threshold strength required for ablation is approximately 50 mJ/cm^2, while the most efficient processing strength is 200 mJ/cm^2, and a preferred level is on the order of 800 mJ/cm^2. Because of the efficiency of most beam delivery systems, typically only between 0.1 cm^2 and 0.5 cm^2 of the substrate is processed at a time. In

the present invention, while it is preferred that the strength of each exposure is the same, in another embodiment, the strength of each series of exposures varies, depending on the requirements of the pattern, such as the depth of the ablation.

The second process modification to the prior art step and repeat process involves moving an image less than one full image pattern dimension. Figures 5 and 6 will be used to explain how this process modification can allow different parts of a mask image to expose any one area of the substrate. Figure 5 is a schematic diagram of a laser projection ablation system having mask 50 and lens 52. Object field size 56 corresponds to the outer dimensions of the pattern on mask 50. At image 58, on the surface of the substrate, image field size 60 corresponds in form with the pattern on mask 50 and in size to the object field size 56 reduced by a ratio as determined by the magnification of lens 52. Figure 6 shows a portion of substrate 80 which has been exposed to light a plurality of times. The boundaries of first image 70 is shown ablated at a first location of substrate 80, the repeating pattern within first image 70 not shown. In prior art step and repeat processes, after the first image was completely ablated, the image ablated subsequent to first image 70, image 72, would be completely ablated adjacent or nearly adjacent first image 70. In the method of the present application, however, substrate 80 would be moved less than the image field size at the substrate such that second image 74, shown in dotted lines, would have a portion overlapping with first image 70. Consequently, the third ablated image would be image 74. When uniformity of a repeating pattern is the goal of the present invention, incomplete ablation is performed at each step, as described in the aforementioned first process modification. The overlap of aligned repeating patterns in the image allows subsequent exposures to complete the exposure to an area of the substrate.

In an alternative embodiment of the second modification to step and repeat processes, after first image 90 is ablated, substrate 100 is moved an amount equal to at least the image field size at substrate 100. This is similar to prior art step and repeat processes where second image 92 is adjacent first image 90. When the first modification is used in combination with the second modification, at each step the pattern is only partially ablated into substrate 100. Thus, no overlap occurs in a first series of ablation. In a second series of ablation, however, substrate 100 is moved such that at least a portion of the image field at substrate 100 overlaps an area on substrate

100 previously ablated in the first series of ablation. In Figure 7, first image of second series of ablation 102, shown in dotted lines, overlaps first image 90, second image 92 as well as two additional images from the first series of ablation. The second series of ablation may proceed similarly to the first series of ablation, wherein each subsequent image does not overlap with a preceding second series image, or it may proceed similarly to the process shown in Figure 6, where each subsequent image overlaps with a preceding second series image, or it may proceed using a combination of both. Similarly, in Figure 6, after the first series of overlapping images have been ablated, the next series or next plurality of series of ablated images may proceed with any combination of overlapping and non-overlapping images. When uniformity of a repeating pattern is the goal of the present invention, the first series of ablation preferably covers substantially all of the desired ablated area on the substrate. Moreover, the first series of ablation provide less than the required dosage of light, the remaining required dosage of light provided in subsequent series of ablation.

In a preferred embodiment for ablating uniform repeating structures, both the first modification and the second modification to a step and repeat process are utilized. For example, using a excimer laser projection ablation system as shown in Figure 3 can be used to create a repeating pattern of square holes. A 6mm x 6 mm mask containing a 46 x 46 array of elements, or 2116 elements, having a pattern similar to the pattern shown in Figure 4 may be used as the mask pattern. If ablating a polymer such as polyimide having a thickness of 50 microns, a fluence range of approximately 800 mJ/cm^2 is preferred, thereby removing approximately 0.5 microns/pulse. Therefore, approximately 100 exposures are necessary to remove the polyimide for each structure to the desired depth. While it is often preferred to step a single feature between exposures, because only 100 exposures are necessary and 2116 elements exist in the image field in the present example, a single feature step is not preferred. Rather than stepping a single feature, each step may be multiples of features, such as stepping four features horizontally when moving the substrate across a row and five features vertically when moving the substrate across a column.

Figure 8 shows an enlarged view of a portion of an ablated polyimide substrate using the method described above. In the ablated pattern of Figure 8, uniformity across the substrate is achieved because the method of the present invention

substantially eliminates accumulation of debris on the surface of the polyimide as well as averages out nonuniformities in intensity of the illumination of the mask. The incomplete ablation of the first modification facilitates debris removal. When only one pulse, or only a few pulses, are delivered by the laser before moving the substrate to the next image position, the debris accumulation is small enough that it does not substantially affect the ablation characteristics of the substrate material. In conjunction with the incomplete ablation, the movement of the substrate such that areas of the substrate are exposed to additional illumination during later series of ablation as described in the second modification allows completion of the ablation to the desired depth. The overlapping of image patterns at the substrate distributes the nonuniformities of the illumination of the beam across the entire ablated substrate surface, particularly when the image pattern is stepped a single feature between each incomplete exposure. This distribution exposes each ablated structure to a substantially similar pattern of relatively higher intensity portions of the beam cross-section and relatively lower intensity portions of the beam cross-section. In an embodiment where the image pattern is stepped more than a single feature between each incomplete exposure, such as the example above where the image pattern is stepped four features when moving horizontally and five features when moving vertically, the beam only need be substantially uniform over each 4x5 feature cross-sectional area to achieve uniformity.

Because the relative strength of the beam varies across its cross-section, the order in which each area of a substrate is exposed to a portion of the beam affects the uniformity of the finally ablated features in that area. The quality and result of an exposure varies with respect to the fluence of the beam. For example, higher fluence results in deeper ablation with straighter walls, more effective debris removal and less spurious post formation from contamination in the substrate. Conversely, lower fluence results in shallower ablation, often with some angle in the walls of the ablated feature. If an area of a substrate is exposed to a series of incomplete exposures, each exposure having a different fluence level, the shape of the finally ablated feature would vary depending on the order of the exposures. The wall angle, for example, would vary between different features as well as within a single feature, portions of the walls being more vertical when exposed to a higher fluence level and more angled when exposed to a lower fluence level.

In the method of the present invention, uniformity between features is further achieved because the order in which each area of a substrate is exposed may be planned to be the same for all areas of the substrate. In a highly simplified example, Figure 9 shows the boundaries of image field 120. Within image field 120, the intensity of the beam varies between the four quadrants, quadrants 122, 124, 126, and 128 of image field 120.

Figure 10a shows a portion of substrate 132 where an image pattern is first partially exposed within image field 120. Referring back to Figure 9, area 130 of substrate 132, shown in dotted lines within image field 120, corresponds with fourth quadrant 128 of image field 120. When substrate is moved horizontally and an image pattern is partially exposed for a second time, as shown in Figure 10b, area 130 of substrate 132 receives a second exposure from a different part of the mask and a different part of the cross-section of the beam, this time corresponding with quadrant 126 of image field 120. After ablation across the row is completed, a second row of ablation may commence. Figure 10c shows an image pattern being partially exposed for a third time, area 130 of substrate 132 receiving illumination from quadrant 124 of image field 120. Finally, during a fourth exposure, area 130 receives illumination from quadrant 122 of image field 120. Besides the outer borders of substrate 120, the outer border which will receive no illumination and the inner border which will receive insufficient illumination, the rest of substrate 120 will receive illumination in the same order as area 130, namely illumination from quadrant 128 first, quadrant 126 second, quadrant 124 third and quadrant 122 fourth, thereby facilitating uniformity between the ablated features. As shown in Figures 10a-10d, the method of the present invention only partially ablates a desired pattern on the edges of the ablated substrate. The borders formed by these partially ablated portions of the substrate typically will not have completed features and may be discarded.

The method of the present invention can further be utilized to create three-dimensional structures in an efficient and cost effective manner. More specifically, the method of the present invention can be used to created stepped patterns. In theory, only stepped patterns can be created if the laser ablation system has infinite resolution. In practice, however, limits in the system such as the resolution of the lens in a laser projection ablation system and the diffraction limit produce curvature on the walls of the

ablated features. Moreover, this wall angle can be controlled, thereby allowing the system to create curvature in three-dimensional patterns. To create curved structures, smaller step sizes and lower beam fluence are used.

To create three-dimensional structures, the desired structure is broken into cross-sectional contours or features. If curved structures smooth to the touch are desired, contours, and therefore step sizes of approximately 10 microns and less are requires. If curved structures smooth to sight are desired, however, step sizes of approximately 0.5 microns and less are required. After determining the number of contours necessary for each structure, the mask is divided into sections, preferably of equal size and equally spaced. Each mask section must be large enough to contain one of the contours necessary to ablate the desired three-dimensional structure. Then each contour is drawn and the mask is produced, each mask section having the necessary contours positioned on appropriate locations on the mask, as will later be described. Figure 11 shows a portion of a mask 150 having four contours, contours 152, 154, 156, and 158. While the portion of mask 150 shown in Figure 11 shows four contours used to create a single structure, any number of contours physically able to fit on a mask may be placed on the mask. Moreover, any number identical or different sets of contours able to create a plurality of identical or different repeating or three-dimensional structures may be placed on a single mask.

The mask is used to pattern light in a laser ablation system such as the system shown in Figure 3. Similar to the preferred embodiment for creating uniform repeating structures, the ablation of each contour is preferably performed by exposing the substrate to a single pulse of the laser beam to facilitate debris removal. In such a preferred embodiment, the depth of ablation for a particular contour will correspond to the fluence of the beam. In another embodiment, the substrate is exposed to a plurality of pulses before the substrate is moved such that greater depth of ablation is achieved. In yet another embodiment where greater depth of ablation is desired as well as a lower fluence, subsequent pulses are provided at later passes, rather than at the same step. Further, the entire mask is illuminated. It is not necessary to shutter off unused portions of the mask, thereby wasting illumination from the laser. The resulting exposure after the first exposure is a plurality of different shaped contours, each contour having the same depth, as shown in Figure 12a.

After the first exposure, substrate 160 is moved a distance less than the image field size at the substrate. More specifically, substrate 160 is moved such that the next desired contour is appropriately aligned in relation to the preceding ablated contour. Thus, when the contours are being arranged on the mask, it is necessary to arrange the contours in an order such that they will be ablated in the correct order, as well as in positions such that at each step they will be appropriately aligned. By placing the all the necessary contours at precise locations on the mask, the system of the present invention avoids needing multiple masks, mask alignment systems as well as expensive beam alignment systems. Figure 12b shows a portion of substrate 160 after a second exposure. In Figure 12b, the same number of pulses were used to create an ablation depth similar to the first exposure, although more or less pulses could be used. Variations on the movement of the substrate are similar to the aforementioned variations described for the purposes of uniformity.

Figure 12c shows a portion of substrate 160 after substrate 160 has been moved again and has been exposed a third time. Figure 12d shows a portion of substrate 160 after moving substrate 160 and a fourth exposure. In Figure 12d, the structure encloses in box 170 is the first completed structure, possibly a lenslet. When creating some structures, such as lenslets, for example, it may be preferable to first ablate the smallest feature first, such as the feature corresponding to contour 158 of mask 150 and expose the substrate to progressively larger contours. While two specific orders of ablation have been described for creating three-dimensional structures, any order of sizes of features may be arranged based on the desired three-dimensional structure. As shown in Figure 12d, structures 172, 174 and 176 are incomplete structures. In the method of the present invention, a border of incomplete structures will exist and can be ignored or discarded. Figure 13 shows an enlarged view of a plurality of lenslets that have been produced using the described method.

Although a preferred embodiment has been illustrated and described for the present invention, it will be appreciated by those of ordinary skill in the art that any method or apparatus which is calculated to achieve this same purpose may be substituted for the specific configurations and steps shown. This application is intended to cover any adaptations or variations of the present invention. Therefore, it is

manifestly intended that this invention be limited only by the appended claims and the equivalents thereof.

Claims:

1. A system for exposing a substrate to patterned illumination, said system comprising:

support means for supporting thereon said substrate;

movement means for moving said support means;

illumination means for producing illumination; and

a mask with a pattern of features thereon, said features needing a necessary level of illumination from said illumination means for sufficient formation on said substrate;

wherein said illumination means provides less than said necessary level of illumination at a first time, leaving a remaining amount of illumination to reach said necessary level of illumination and provides said remaining amount of illumination at one or more later times.

2. The system for exposing a substrate to patterned illumination according to claim 1, wherein said illumination means comprises an excimer laser system.

3. The system for exposing a substrate to patterned illumination according to claim 2, wherein said excimer laser system comprises:

an excimer laser for producing pulsed laser beams; and

an optical system for guiding said laser beams and projection an image of said mask onto said substrate.

4. The system for exposing a substrate to patterned illumination according to claim 1, wherein said pattern on said mask comprises a plurality of contours, each said contour corresponding to a cross-sectional slice of a three-dimensional structure.

5. A system for exposing a substrate to patterned illumination, said system comprising:

support means for supporting thereon a substrate;

movement means for moving said support means;

illumination means for producing illumination; and

a mask with a pattern of features thereon, said pattern transferred onto said substrate and forming an image having an image field size;

wherein said movement means moves said substrate a distance less than said image field size between each exposure of said substrate to said illumination.

6. The system for exposing a substrate to patterned illumination according to claim 5, wherein said movement means moves said substrate a distance equal to a single feature.

7. The system for exposing a substrate to patterned illumination according to claim 5, wherein said movement means moves said substrate a distance equal to a plurality of features.

8. A laser projection ablation system, said system comprising:

support means for supporting thereon a substrate;

movement means for moving said support means;

a laser for emitting pulsed laser beams;

a mask with a pattern of repeating features thereon, said features needing a necessary number of said pulsed laser beams from said laser for sufficient ablation on said substrate;

an optical system for guiding said laser beams and projection an image of said mask, said image having an image field size, onto said substrate;

wherein said laser provides less than said necessary number of pulsed laser beams at a first time, leaving a remaining number of pulsed laser beams to reach said necessary number of pulsed laser beams and provides said remaining number of pulsed laser beams at one or more later times and wherein said movement means moves

said substrate a distance less than said image field size between each exposure of said substrate to said pulsed laser beams.

9. A method of micromachining structures onto a substrate using patterned illumination, said structures being formed by features, said method comprising the steps of:

exposing said substrate to said patterned illumination to partially expose said structures within an image field;

moving said substrate a distance less than said image field;

repeating said exposing and moving steps until a predetermined area on said substrate has completely exposed structures.

10. The method of micromachining structures onto a substrate according to claim 9, wherein said structure is a three-dimensional structure and wherein each of said features corresponds to a cross-sectional slice of said three-dimensional structure.

11. A method of micromachining structures onto a substrate using patterned illumination, said structures being formed by features, said method comprising the steps of:

exposing said substrate to said patterned illumination to partially expose said structures within an image field;

moving said substrate a distance at least one said image field;

repeating said exposing and moving steps until a predetermined area on said substrate has partially exposed structures;

repositioning portions of said predetermined area on said substrate within said image field;

reexposing said portions of said predetermined area on said substrate to said patterned illumination;

repeating said repositioning and reexposing steps until said predetermined area on said substrate has fully exposed structures.

12. The method of micromachining structures onto a substrate according to claim 11, wherein said step of repositioning said predetermined area ensures that no said portions of said predetermined area are positioned in the same location in said image field as said portions of said predetermined area were positioned for a previous exposure.

13. A method of exposing a substrate using a patterned mask, said patterned mask having a plurality of portions, said method comprising moving said substrate between exposures such that an area of said substrate is exposed to illumination passing through more than one portion of said plurality of portions of said patterned mask.

14. A method of exposing a substrate using a patterned mask, said method comprising the steps of:

exposing an area of said substrate to illumination passing through a first portion of said patterned mask, said level of illumination being less than a necessary level of illumination;

reexposing said area of said substrate to illumination passing through a second portion of said patterned mask.

15. The method of exposing a substrate using a patterned mask according to claim 14, further comprising the step of repeating said reexposing step with illumination passing through a plurality of portions of said patterned mask until said substrate has been exposed to said necessary level of illumination.

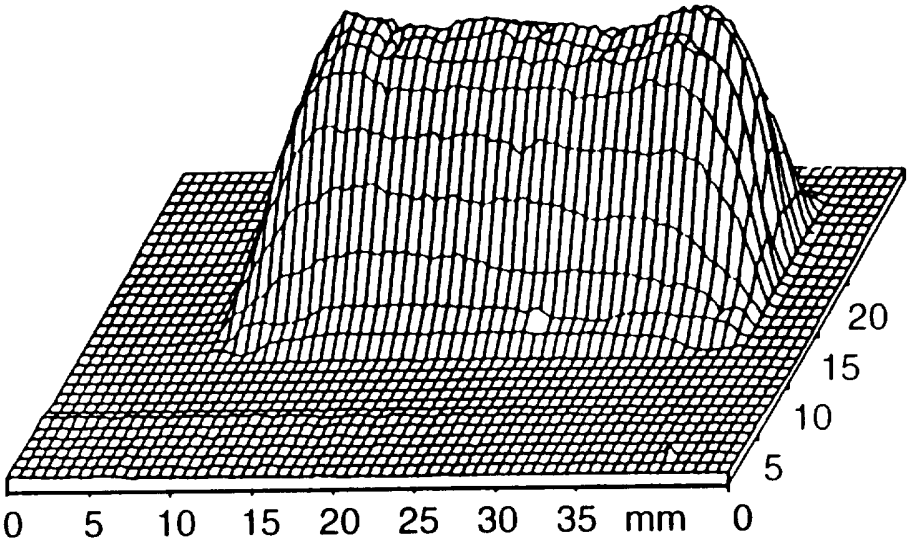

FIG.1a

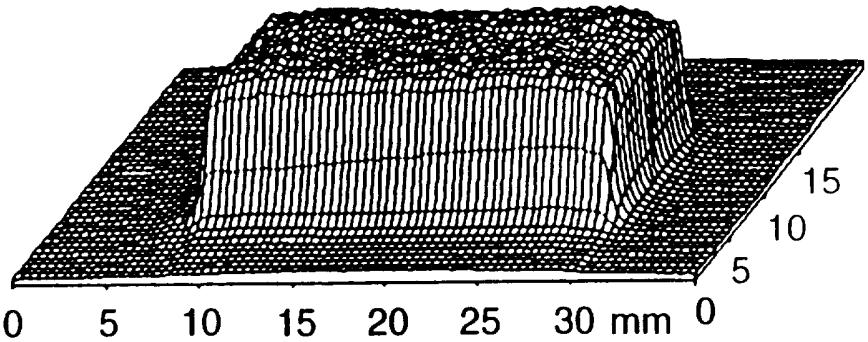

FIG.1b

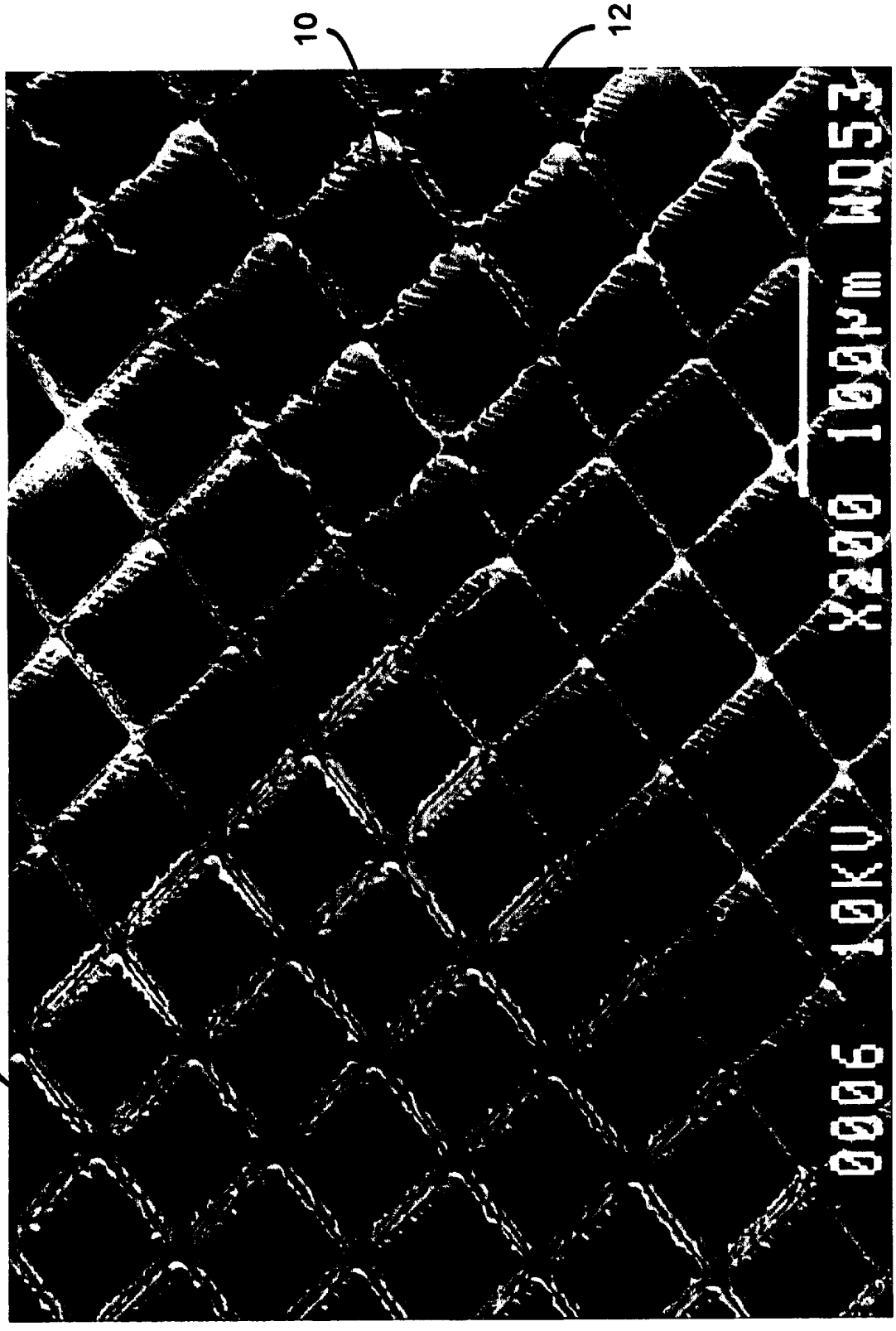

FIG. 2

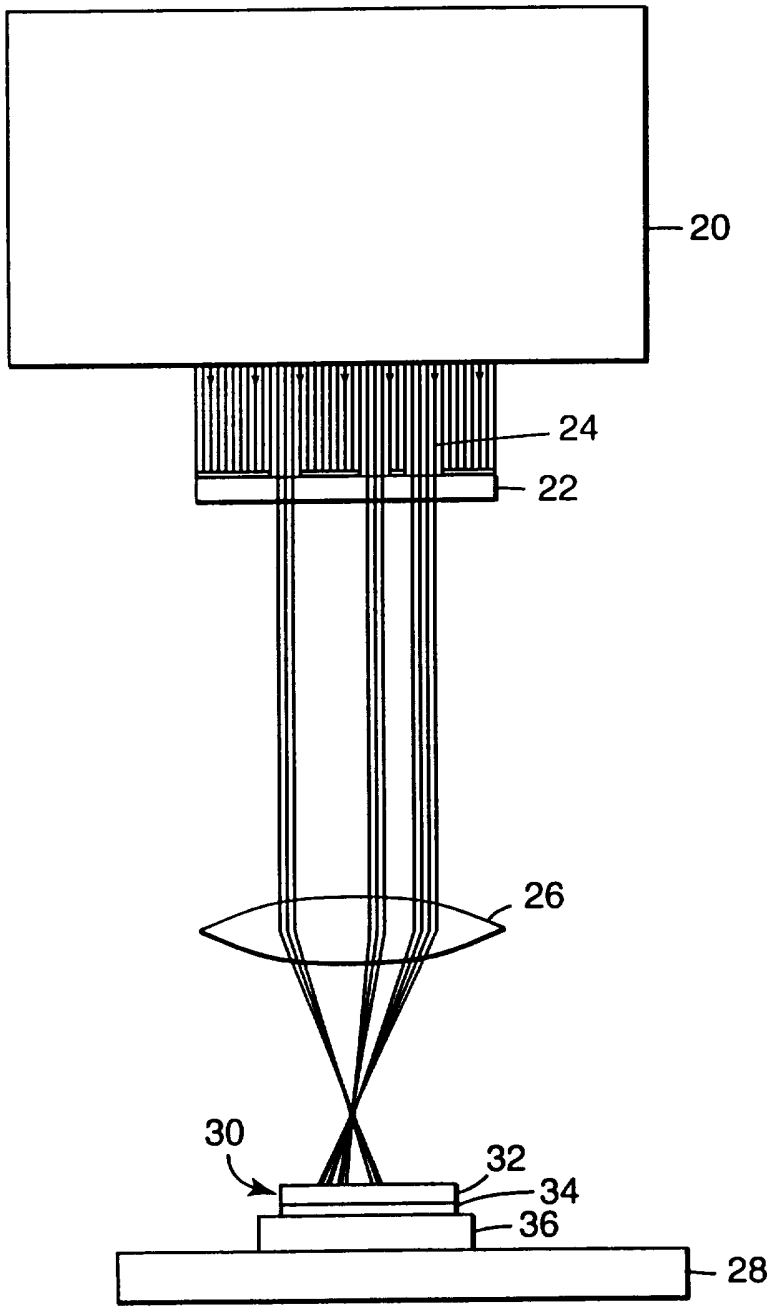

FIG. 3

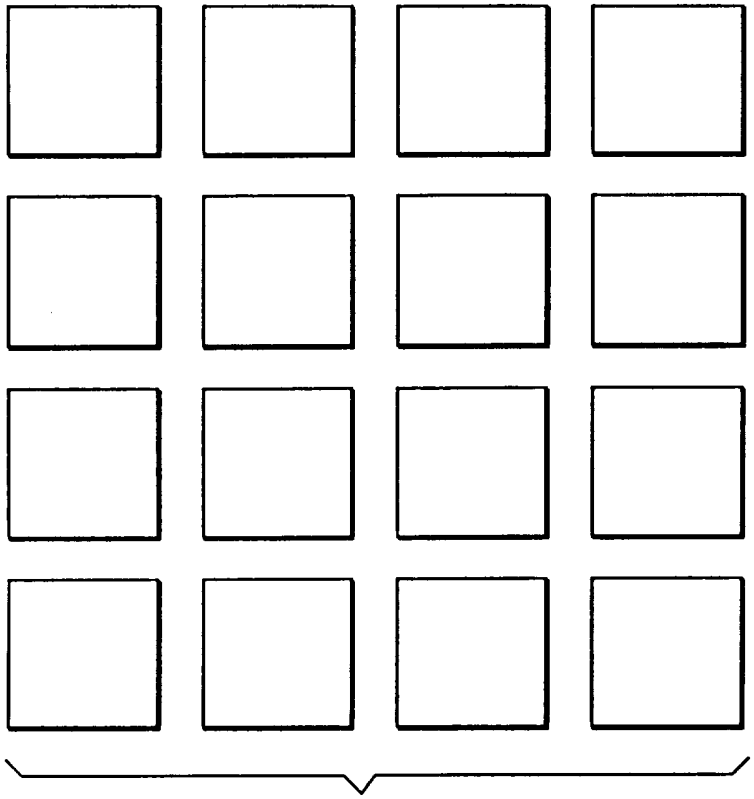

FIG. 4

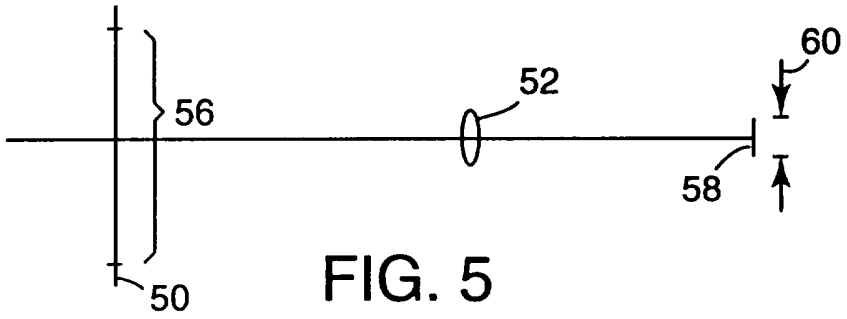

FIG. 5

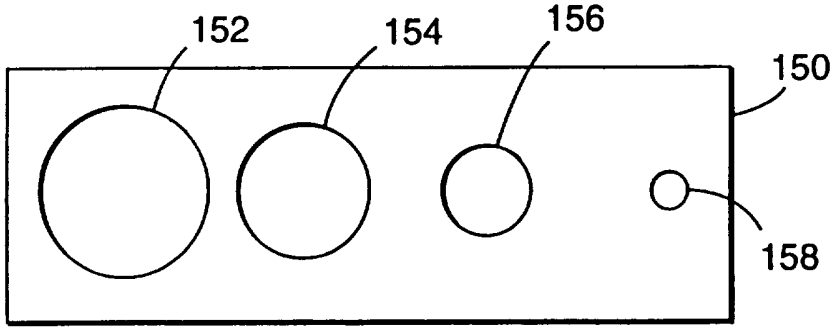

FIG. 11

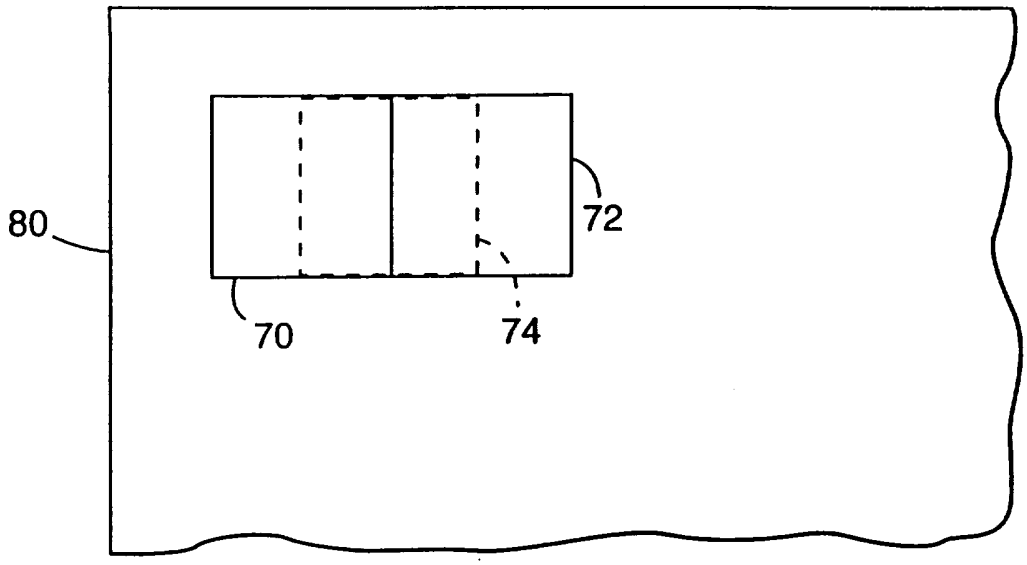

FIG. 6

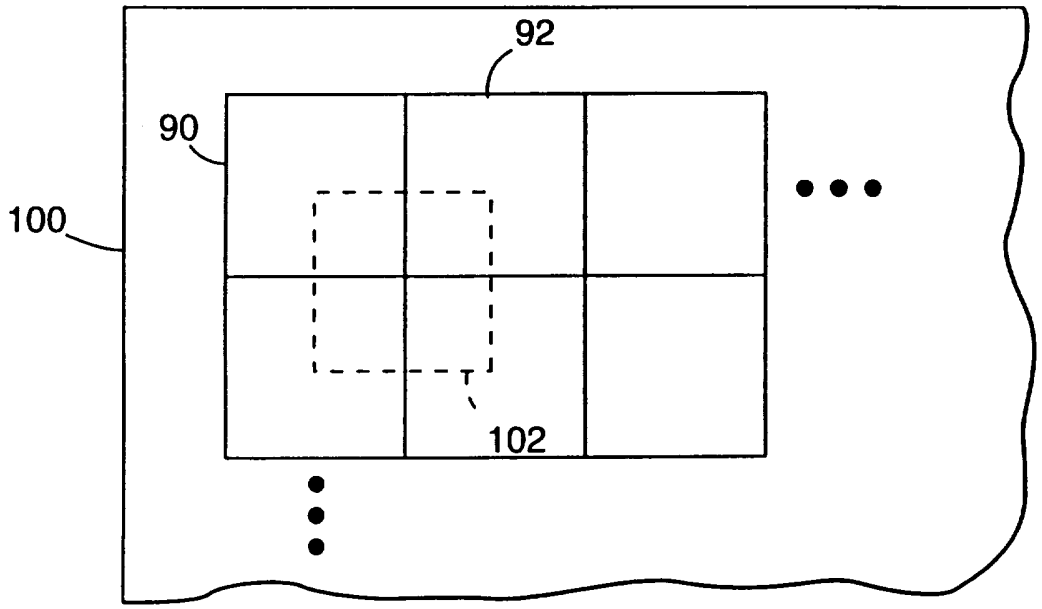

FIG. 7

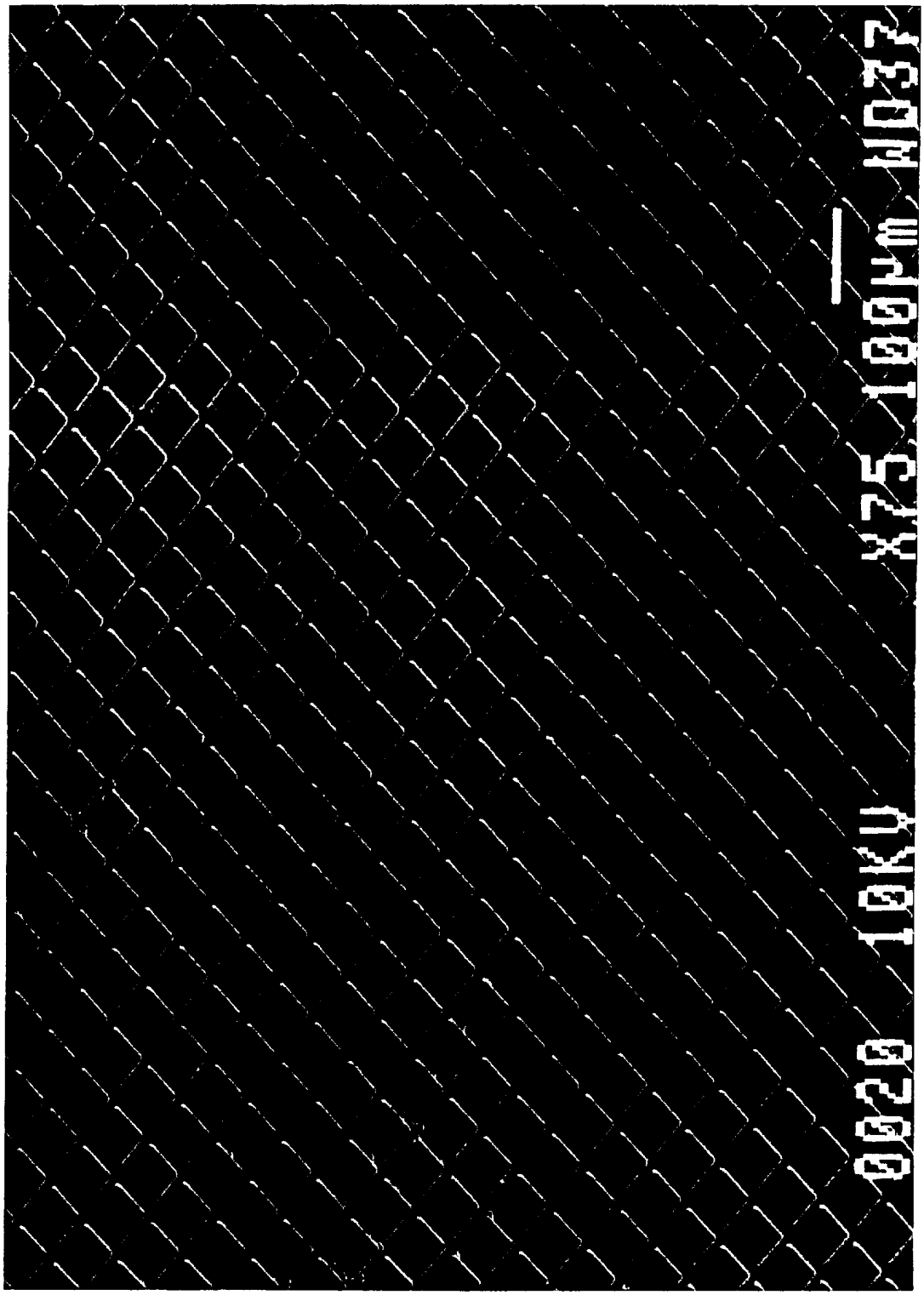

FIG. 8

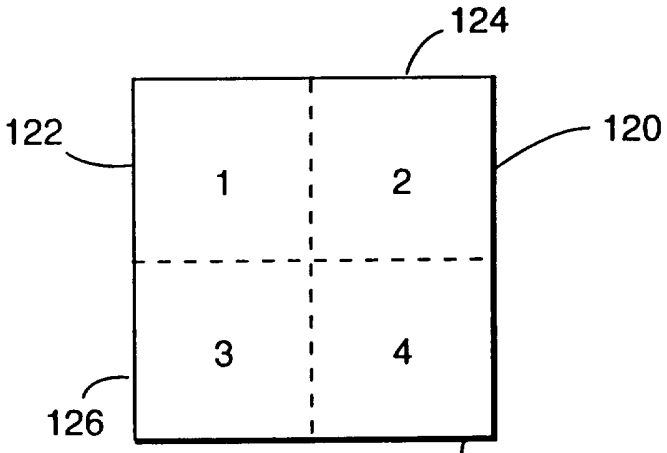

FIG. 9

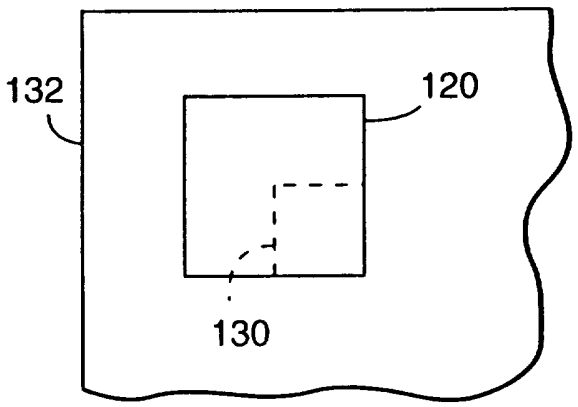

FIG. 10a

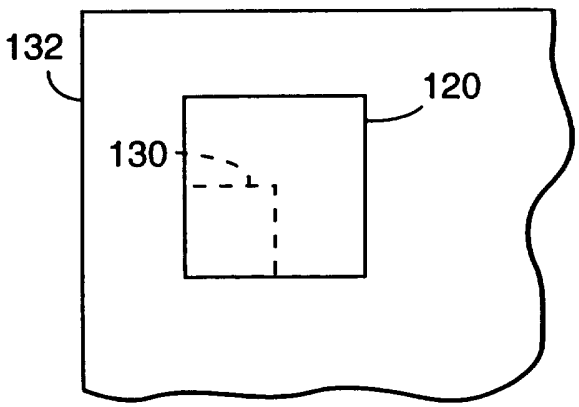

FIG. 10b

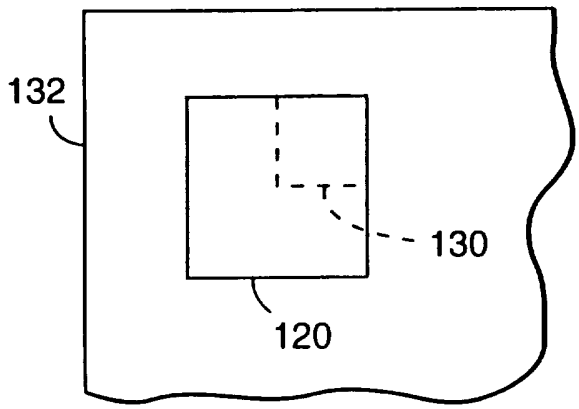

FIG. 10c

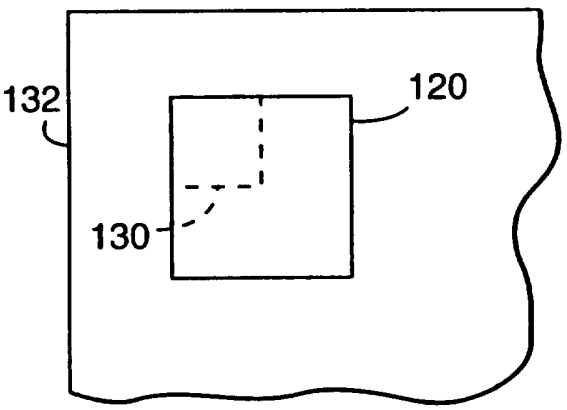

FIG. 10d

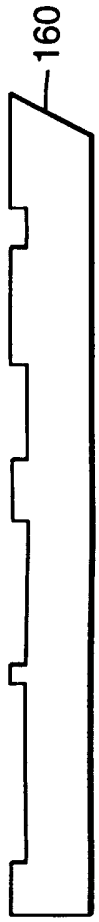

FIG. 12a



FIG. 12b



FIG. 12c

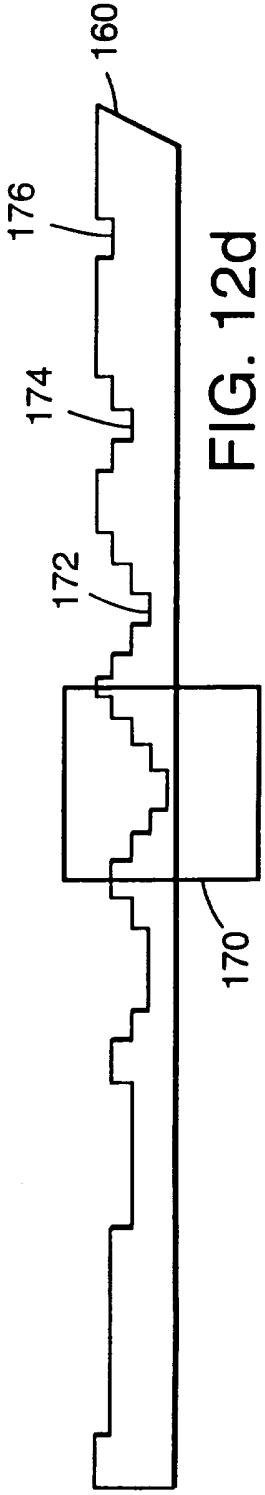

FIG. 12d

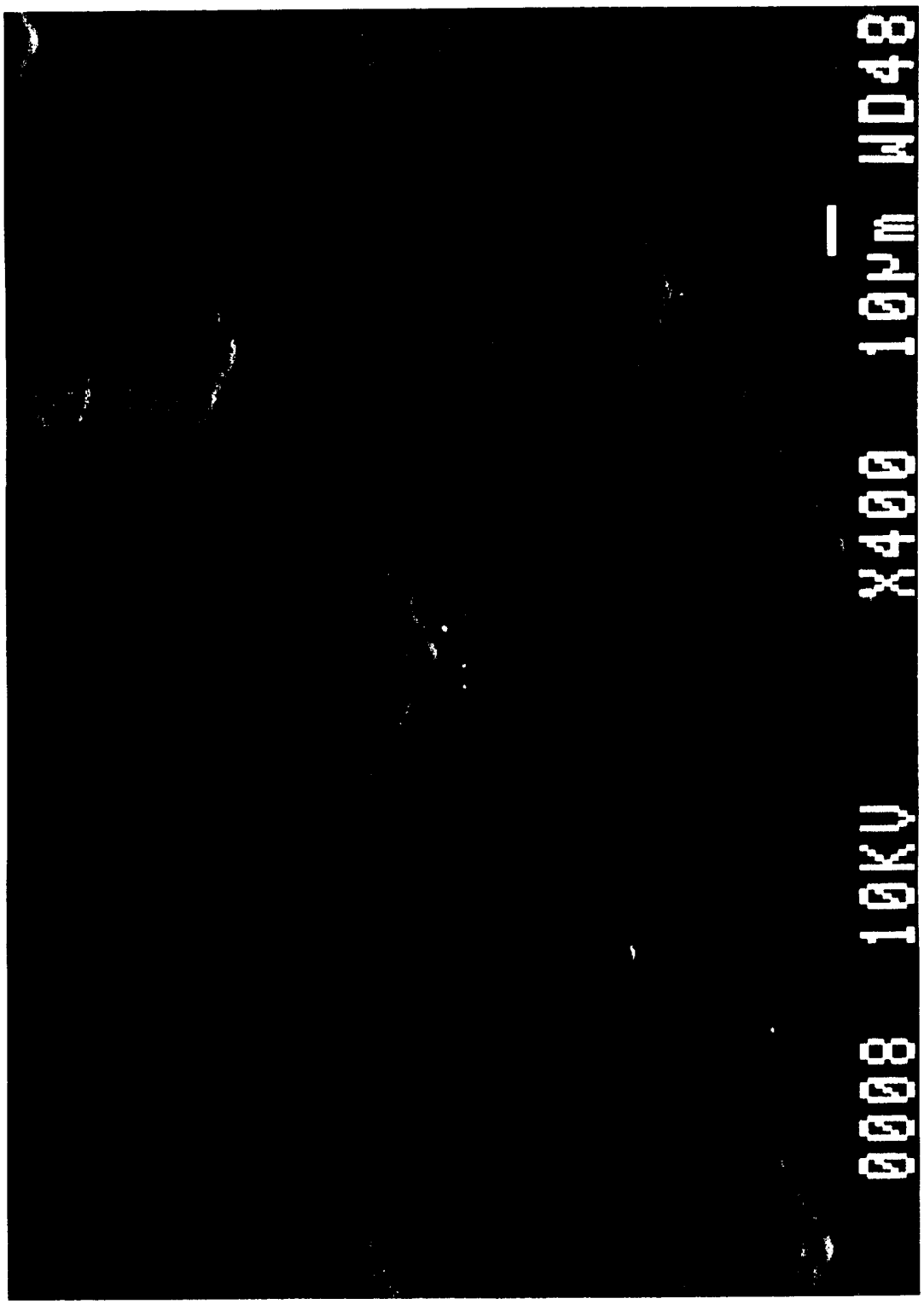

FIG. 13

INTERNATIONAL SEARCH REPORT

Inter nal Application No
PCT/US 96/04322

A. CLASSIFICATION OF SUBJECT MATTER
IPC 6 B23K26/06

According to International Patent Classification (IPC) or to both national classification and IPC

B. FIELDS SEARCHED

Minimum documentation searched (classification system followed by classification symbols)
IPC 6 B23K G02B

Documentation searched other than minimum documentation to the extent that such documents are included in the fields searched

Electronic data base consulted during the international search (name of data base and, where practical, search terms used)

C. DOCUMENTS CONSIDERED TO BE RELEVANT

Category *	Citation of document, with indication, where appropriate, of the relevant passages	Relevant to claim No.
X	WO,A,94 25259 (OMRON CORPORATION) 10 November 1994 see the whole document	1-15
X	US,A,4 822 975 (CANON KABUSHIKI KAISHA) 18 April 1989	1-6,9-11
A	see the whole document	8,13,14
X	EP,A,0 079 473 (SCHOTT-ZWIESEL-GLASWERKE AKTIENGESELLSCHAFT) 25 May 1983	1,4,5,7, 9-11,13, 14
A	see the whole document	3,6,8,15
X	WO,A,91 01514 (RAYCHEM LIMITED) 7 February 1991 see the whole document	1-3,5-9, 13

-/--

[X] Further documents are listed in the continuation of box C.

[X] Patent family members are listed in annex.

* Special categories of cited documents :

"A" document defining the general state of the art which is not considered to be of particular relevance

"E" earlier document but published on or after the international filing date

"L" document which may throw doubts on priority claim(s) or which is cited to establish the publication date of another citation or other special reason (as specified)

"O" document referring to an oral disclosure, use, exhibition or other means

"P" document published prior to the international filing date but later than the priority date claimed

"T" later document published after the international filing date or priority date and not in conflict with the application but cited to understand the principle or theory underlying the invention

"X" document of particular relevance; the claimed invention cannot be considered novel or cannot be considered to involve an inventive step when the document is taken alone

"Y" document of particular relevance; the claimed invention cannot be considered to involve an inventive step when the document is combined with one or more other such documents, such combination being obvious to a person skilled in the art.

"&" document member of the same patent family

2

Date of the actual completion of the international search	Date of mailing of the international search report
3 July 1996	12.07.96
Name and mailing address of the ISA European Patent Office, P.B. 5818 Patentlaan 2 NL - 2280 HV Rijswijk Tel. (+31-70) 340-2040, Tx. 31 651 epo nl, Fax (+31-70) 340-3016	Authorized officer Aran, D

Form PCT/ISA/210 (second sheet) (July 1992)

INTERNATIONAL SEARCH REPORT

Inter ıal Application No
PCT/US 96/04322

C.(Continuation) DOCUMENTS CONSIDERED TO BE RELEVANT

Category *	Citation of document, with indication, where appropriate, of the relevant passages	Relevant to claim No.
X	US,A,5 160 823 (HUTCHINSON TECHNOLOGY, INC.) 3 November 1992 see the whole document	1,5-8, 13-15
X	WO,A,94 29071 (BAUSCH & LOMB INCORPORATED) 22 December 1994 see the whole document	1,4-11, 13
A	EP,A,0 479 355 (N.V. PHILLIPS' GLOEIENLAMPENFABRIEKEN) 8 April 1992	1,5-13
X	see the whole document	14,15
A	FR,A,2 692 067 (LASER INTERNATIONAL (S.A.)) 10 December 1993	1,4-13
X	see the whole document	14,15
A	EP,A,0 346 116 (LRI L.P.) 13 December 1989 see the whole document	1-5,8-13
A	EP,A,0 417 952 (GENERAL ELECTRIC COMPANY) 20 March 1991	1,3-13
X	see the whole document	14,15

2

INTERNATIONAL SEARCH REPORT

Information on patent family members

Interr al Application No
PCT/US 96/04322

Patent document cited in search report	Publication date	Patent family member(s)	Publication date
WO-A-9425259	10-11-94	JP-A- 7001172	06-01-95
US-A-4822975	18-04-89	JP-A- 60158449	19-08-85
		JP-A- 61280619	11-12-86
EP-A-79473	25-05-83	DE-A- 3145278	26-05-83
		CA-A- 1208301	22-07-86
		JP-C- 1699165	28-09-92
		JP-B- 3051514	07-08-91
		JP-A- 58090390	30-05-83
		US-A- 4606747	19-08-86
WO-A-9101514	07-02-91	AT-T- 136131	15-04-96
		CA-A- 2056358	15-01-91
		DE-D- 69026258	02-05-96
		EP-A- 0482051	29-04-92
		JP-T- 4507479	24-12-92
		US-A- 5296673	22-03-94
US-A-5160823	03-11-92	NONE	
WO-A-9429071	22-12-94	AU-B- 7107594	03-01-95
		EP-A- 0702611	27-03-96
EP-A-479355	08-04-92	NL-A- 9002036	16-04-92
		JP-A- 4270082	25-09-92
		US-A- 5406042	11-04-95
FR-A-2692067	10-12-93	NONE	
EP-A-346116	13-12-89	AT-T- 110952	15-09-94
		CA-A- 1325832	04-01-94
		DE-D- 68917998	13-10-94
		DE-T- 68917998	26-01-95
		JP-C- 1723225	24-12-92
		JP-A- 2167164	27-06-90
		JP-B- 3074577	27-11-91
		US-A- 5219344	15-06-93
EP-A-417952	20-03-91	CA-A- 2021110	06-03-91

INTERNATIONAL SEARCH REPORT

Information on patent family members

Inter ıal Application No
PCT/US 96/04322

Patent document cited in search report	Publication date	Patent family member(s)	Publication date
EP-A-417952		CN-A- 1049966	20-03-91
		DE-D- 69014785	19-01-95
		DE-T- 69014785	13-04-95
		JP-A- 3155491	03-07-91