April 28, 1964 K. F. CANNON, JR 3,130,999

RECOVERY SYSTEM FOR UNDERWATER OBJECTS

Filed Oct. 5, 1962 2 Sheets-Sheet 1

FIG.1.

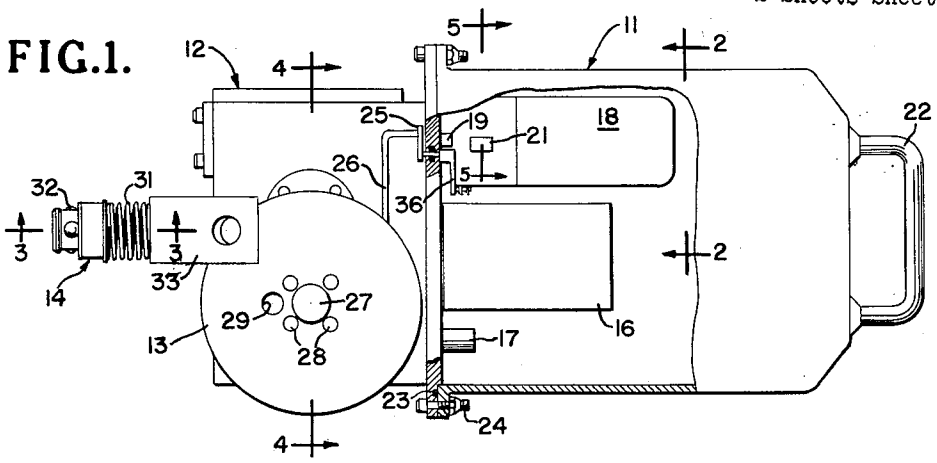

FIG.2.

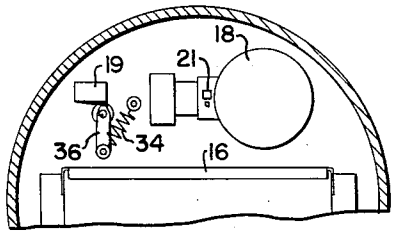

FIG.5.

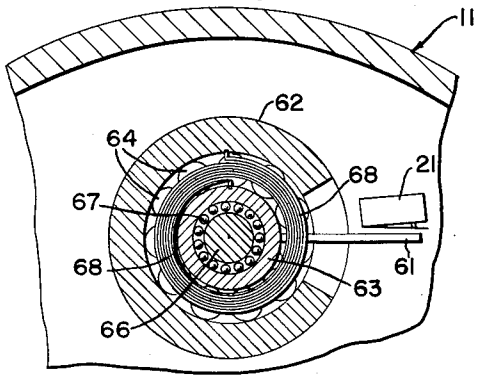

FIG.3.

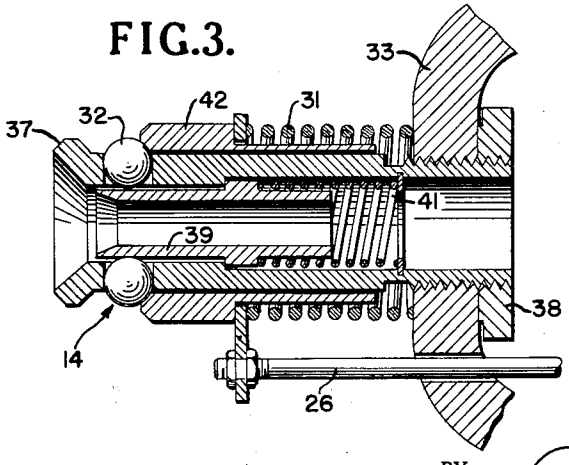

FIG.6.

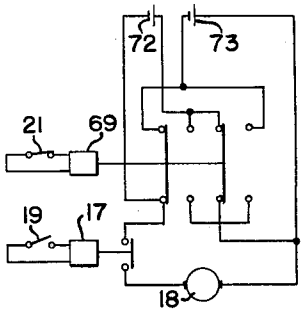

INVENTOR.
KENNETH F. CANNON, JR.

BY

ATTORNEY.

April 28, 1964 K. F. CANNON, JR 3,130,999

RECOVERY SYSTEM FOR UNDERWATER OBJECTS

Filed Oct. 5, 1962 2 Sheets-Sheet 2

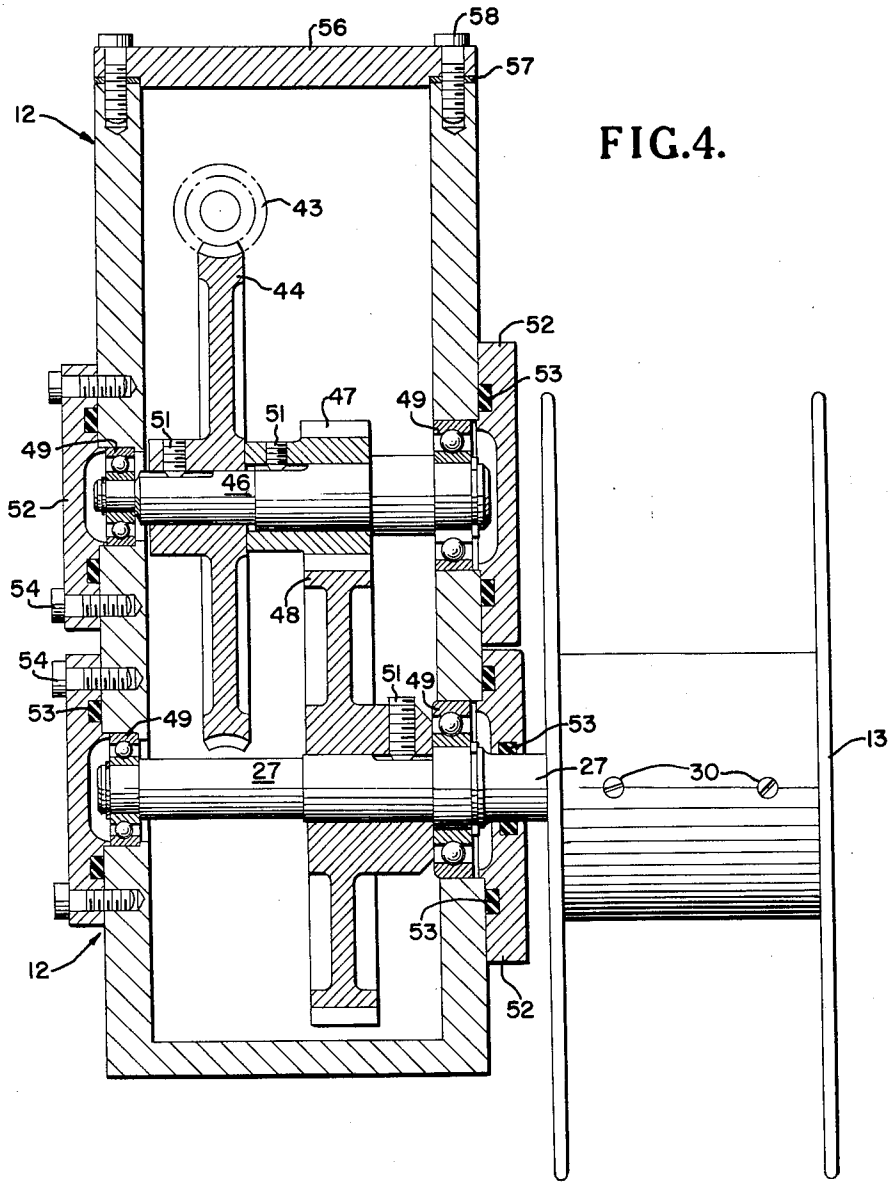

FIG.4.

INVENTOR.
KENNETH F. CANNON, JR.

BY J. E. Hodges

ATTORNEY.

United States Patent Office 3,130,999 Patented Apr. 28, 1964

3,130,999
RECOVERY SYSTEM FOR UNDERWATER OBJECTS

Kenneth F. Cannon, Jr., Bethesda, Md., assignor to the United States of America as represented by the Secretary of the Navy

Filed Oct. 5, 1962, Ser. No. 228,776
9 Claims. (Cl. 294—66)

(Granted under Title 35, U.S. Code (1952), sec. 266)

The invention described herein may be manufactured and used by or for the Government of the United States of America for governmental purposes without the payment of any royalties thereon or therefor.

The present invention relates to a recovery system for objects and more particularly to a fully automatic self-propelled recovery system for retrieving inaccessible objects.

In recovery apparatus, particularly that employed under water, two types have generally been in use; the one type in which recovery apparatus has been dropped down in the vicinity of the object to be recovered guided by a guideline, and the other type in which a remote control system from the boat or ship is utilized to direct an underwater search apparatus complete with television camera for effecting recovery. The first system is subject to waves and currents within the body of water which prevents the recovery apparatus from reaching the object to be recovered while the second system is very elaborate and cumbersome as well as expensive.

The purpose of the present invention is to provide a recovery apparatus for inaccessible objects, particularly those submerged underwater, in which a small, weak lead line is attached from the submerged object to a floating marker buoy. The lead line being utilized in the present system to lead or guide the self-propelled recovery apparatus to the submerged object and there attach itself to the object, thereby allowing the recovery of the object by means of the suitable recovery wire or rope carried by the recovery apparatus and attached to the object by the present recovery system.

An object of the present invention is to provide an automatic self-powered, self-attaching recovery apparatus which is capable of following a lead line to an inaccessible object and attaching thereto a suitable recovery line to accomplish recovery of the object.

Another object of the present invention is to provide a sensing apparatus for detecting and controlling the torque of the drive motor.

Still another object is to provide switching apparatus for controlling the power supply to the battery when the apparatus is attached to the object to be recovered.

Another object of the invention is to provide a reversible gear train for retrieving the recovery apparatus without damage to the lead line in the event the recovery apparatus fails to reach the inaccessible object.

With these and other objects in view, as will hereinafter more fully appear, and which will be more particularly pointed out in the appended claims, reference is now made to the following description taken in connection with the accompanying drawings in which:

FIG. 1 illustrates a side view, partially in section, of the recovery apparatus of the present invention;

FIG. 2 is a section of the device taken along lines 2—2 of FIG. 1;

FIG. 3 is a section of the device taken along lines 3—3 of FIG. 1;

FIG. 4 is a section of the apparatus taken along the lines 4—4 of FIG. 1;

FIG. 5 is a section of the apparatus taken along lines 5—5 of FIG. 1; and

FIG. 6 is a schematic diagram of the circuitry utilized in the present invention.

FIG. 1 illustrates a housing, generally indicated as 11, to which is attached a gear housing, generally shown as 12, with a take-up wheel 13 protruding from a side of the housing with a release mechanism, generally shown at 14, which is attached to the gear housing to direct and guide the lead line on the take-up wheel 13. Within the housing 11 is contained the power source, a D.C. battery package 16, which in this illustrative embodiment consists of two 12 volt batteries which supply power to the entire recovery mechanism, and a relay 17 which accomplishes the switching on and off of the power to the series wound armature and field of motor 18. Also within the housing 11 is a control switch 19 and a torque sensing relay switch 21. The additional unused space within the housing 11 provides a volume which tends to displace a sufficient amount of water so that, in operations within a body of water, the apparatus can float. The housing has a suitable handle 22 on one end thereof to provide a convenient carrying means for the vessel while an O-ring 23, together with bolts 24, provide a water tight seal for sealing the housing 11 to the gear housing 12. The gear housing 12 contains a reversible winch type set of worm and spur gears which reduce the speed of the output motor 18 and at the same time increase the torque and are of the type in which the pitch of the gears allows the reversing thereof by the application of a sufficient force. Extending from the release mechanism 14 and across gear housing 12 to control the relay switch control 19 is a switch control lever 26 which cooperates with lever 25, fixedly attached to lever 36 by means of a rotatable shaft, to effect a switching of relay switch 19. Extending from the gear housing 12 is a shaft 27 having the take-up wheel 13 attached thereto by set screws 30. Suitable bolts 28, to one of which is attached the lead line which extends through a lead line hole 29 attach the cheek plates to the drum of take-up wheel 13. Attached to the gear housing 12 is the release mechanism 14 which guides the lead line onto the take-up wheel 13 and has an automatic ball triggered release locking device for attaching and locking to a ball on the object to be retrieved. The release mechanism 14 has a spring 31 and a plurality of balls 32 with a retrieving line attaching bracket 33 containing a hole therethrough for attaching a suitable retrieving line, the cooperation of which will be explained more fully later.

In FIG. 2 there is illustrated the motor 18 together with the torque sensing relay switch 21 and the battery package 16 with the relay switch 19 showing the spring biasing means 34 which rotates the lever 36 to effect the opening of the contacts in relay switch 19 upon the withdrawal of the switch control lever 26 from the path of lever 25.

FIG. 3 is a view, in section, of the release mechanism 14 of FIG. 1 and illustrates the ball locking device of the present invention. A main housing 37 is attached to the retriever line bracket 33 by threads and a suitable locking nut 38 and within the bore of the housing 37 is a release trigger device 39, cylindrical in shape and having an external shoulder positioned midway between the ends, one end of which has a tapered sidewall to receive and be engaged by the ball which is attached to the lead line which passes through interior of the release trigger. A spring 41 normally urges the release trigger against the other end of the shoulder within the main housing 37 to keep the balls 32 disengaged. Upon the engagement of the ball upon the lead line with the release trigger 39 the release trigger moves against the biased spring 41 thereby releasing the balls 32 to allow the locking sleeve 42 to slide over the balls due to the biased action of the coil spring 31 thereby locking the plurality of balls 32 around the lead line to prevent the escapement of the ball upon the lead line. At the same time that the locking sleeve 42 ad-

vances over the balls 32, it also moves the switch control lever 26 to thereby remove the switch control lever from the lever arm 25 allowing the spring 34 of FIG. 2 to remove power from the battery to the motor 18.

FIG. 4 illustrates the details of the gear housing 12, of FIG. 1, in which the motor shaft with a worm 43 drives a worm gear 44 which rotates about a shaft 46, driving spur gear 47 which engages with spur gear 48 to further reduce the speed and increase the torque applied to the shaft 27 to drive the take-up wheel 13. All shafts supporting the gears are mounted in ball bearings 49 and are attached to the shafts by suitable screws 51. All of the bearings are covered with cover plates 52 which are attached to the housing by screws 54 and are sealed by O-rings 53 which also seal the shaft 27 to the outside water pressure up to a depth of at least 1000 feet. In a similar manner the housing 12 is sealed to the water pressure by a cover plate 56 sealed with a flat gasket 57 and attached to the remainder of the housing by suitable screws 58.

FIG. 5 illustrates the torque sensing device shown in FIG. 1 having a stationary annular housing 62 with an elongated neck portion 63 of the housing of the motor 18 with a plurality of balls 64 placed between the annular housing 62 and the elongated neck portion 63 of the motor to permit rotation of the motor housing in response to the torque output of the shaft 66 of the motor. The arm 61 is fixedly attached to the elongated neck 63 of the motor housing and is free to move in a limited manner due to the rotational torque force, on a spiral spring 68, produced by the torque output of the shaft 66 of the motor. If the shaft 66 supported by bearings 67, is rotating in a counter-clockwise direction, an opposite and equal force is created on the elongated neck 63 of the motor housing tending to rotate that portion in clockwise direction, which is restrained by the spiral spring 68 so that the rotational movement is a direct result of the torque as measured by the spiral spring 68. The arm 61 is fixedly attached to the elongated neck 63 and after the torque on the housing reaches a predetermined amount the arm 61 rotates in a clockwise direction to actuate a changing of the switch 21. The switch 21, as will be described in connection with FIG. 6, acts to switch the pair of batteries from a parallel to a series connection.

FIG. 6 schematically illustrates the wiring connections utilized in the present invention in which switch 21, as shown in FIGS. 1 and 5, controls the relay 69 which, in the position as illustrated, places the two batteries 72 and 73, contained within battery package 16 in parallel and in the other position places the two batteries in series. Switch 19, as shown in FIGS. 1 and 2, controls relay 17 which controls the turning on and turning off of power to the motor 18. The relay as shown in FIG. 6 places battery 72 in parallel with battery 73 while in the other position the batteries 72 and 73 are in series to double the voltage supply to the motor 18.

As disclosed in my co-pending application having a title Marker Buoy Release Mechanism, Serial Number 238,308, filed November 16, 1962, a missile, a practice bomb, or any object which is desired to be retrieved, can be dropped from an aircraft, with the buoy and release means of my co-pending application attached thereto, so that upon impact with the water the buoy is released from the object to be retrieved and a wire or a lead line is drawn from the buoy as the objects descends in the water leaving the buoy on the surface of the body of the water as a marker. The present invention may be utilized with this marker buoy so that when a ship or vessel approaches to retrieve the object the lead line connecting the buoy with the object, which is of insufficient strength to retrieve the submerged object, is removed from the buoy and threaded through the release mechanism 14, wrapped around the take-up wheel 13 with the end of the lead line extending through the lead line hole 29, and the end is attached to one of the suitable bolts 28. At this time a strong retrieving line of sufficient strength to support the object to be retrieved as well as the retriever mechanism is attached to retriever line bracket 33 by means of the hole therethrough and the retriever system is then in position to be dropped into the water, after power is supplied to the motor 18 from the batteries 72 and 73, contained in battery package 16, by means of the switch 19. As the motor 18, powered by the battery 16, drives the take-up wheel 13 through the gear mechanism within the gear housing 12 the lead line, attached to the object, is wound upon the wind-up wheel 13 and the retriever mechanism is pulled down into the water in following the lead line. At this time the motor 18, being of the D.C. series wound type in which the armature and field are wound in series is turning at slow speed, the two batteries 72 and 73 being in parallel supply one-half the rated voltage of the motor 18 so that the motor will not run away with itself, that is, going too fast, and will evenly wind up the lead line wire upon a take-up wheel 13. As the retriever mechanism descends or propells itself into deeper water more power is required to drive the take-up wheel as well as to pull the retriever line down into the water so that the motor 18 supplies more torque. As illustrated in FIG. 5, more torque tends to rotate the motor housing which is suspended between a plurality of ball bearings 64 so that the arm 61 after it reaches a predetermined torque, rotates in clockwise direction away from the switch 21 to thereby open the contacts of switch 21 to the solenoid 69 of FIG. 6 to act to release the solenoid 69 and switch the contacts to the other set of contacts so that the batteries 72 and 73 are then placed in series with each other. With a subsequent increase in the electrical power available to the motor 18 due to the batteries being in series, the torque is increased and the take-up wheel is able to descend still further into the water. The reason for the series parallel configuration of the batteries 72 and 73 is that under shallow water conditions applying rated power by series batteries the motor 18 tends to rotate too rapidly for the retrieving action since the speed of the motor increases as the torque is decreased in this type D.C. motor. The lead line is wound upon the take-up wheel 13, and as the retriever mechanism approaches the object submerged in the body of water the lead line, attached to a ball on the object to be retrieved, sized to engage the release trigger 39 (FIG. 3) thereby compressing the bias spring 41 which allows the balls 32 (FIG. 3) to close and encircle the lead line. At the same time the locking sleeve 42 is driven under the power of the spring 31 over the balls 32 to lock them in place in a position completely encircling the lead line, which action of the locking sleeve 42 also moves the switch control lever 26 from the path of lever arm 25 so that the lever 36 rotates under the power from spring 34 (FIG. 2), thereby allowing the switch control relay 19 to open and thereby release the relay 71 (FIG. 6) to remove electrical power from the motor 18 thereby halting the operation of the retriever mechanism. The retriever line is connected to the retriever line bracket 33, FIG. 1, so that the object may be removed from the body of water by pulling in the retriever line upon the ship. The gear mechanism, FIG. 4, is such that if it should occur, either due to insufficient power in the batteries, electrical failure or for some other reason the retriever mechanism would stop in its descent to the object to be retrieved, the retriever mechanism may be unwound by pulling on the retriever line connected to the retriever line bracket 33, FIG. 3, since the worm gear 43 is designed so that it may be reversed that is, the pitch of the meshing gears is such that a force applied will cause the motor 18 to rotate in the opposite direction.

Although the retriever mechanism has been described to be used in connection with underwater recovery type systems, it is not intended that the invention be limited to this particular embodiment since the principles involved can easily be adapted to be utilized to retrieve any inaccessible object in which it is preferable that a man not enter the surrounding medium and as long as there is a lead line attached to the object which the retriever mech-

anism can utilize to guide itself to the object to be recovered.

Various modifications are contemplated and may obviously be resorted to by those skilled in the art without departing from the spirit and scope of the invention, as hereinafter defined by the appended claims as only an illustrative embodiment thereof has been disclosed.

What is claimed is:

1. Recovery apparatus for retrieving inaccessible objects by self-propulsion along a predetermined path and attaching a recovery line to the object comprising

means for guiding the recovery apparatus along a predetermined path to the object,

self-contained power means connected to and driving the guide means along the predetermined path,

attaching means operatively connected to the guide means for positively and automatically connecting the recovery apparatus to the object upon termination of the predetermined path at the object,

and a recovery line connected to the guide means for retrieving the guide means and the object after the guide means and the object have been coupled together.

2. Apparatus as recited in claim 1 wherein said self-contained power means comprises

an electric motor having a rotatable shaft output,

a battery power source contained within the recovery apparatus and connected to the electric motor for driving said motor,

and a speed reducing torque increasing reversible gear means connected between the shaft of said motor and the guide means for applying the shaft power output of the motor to the guide means.

3. Apparatus as recited in claim 2 wherein said attaching means comprises

a spring biased cylindrical tube encircling a lead line forming the predetermined path and adapted to be engaged and actuated by a ball on the lead line,

a plurality of locking balls operatively connected to said cylindrical tube and released by the actuation of said cylindrical tube for engaging and locking the attaching means on the lead line,

and spring biased retaining means slideably connected to said locking balls for driving and maintaining the locking balls in a locked position upon actuation of said cylindrical tube.

4. Apparatus as recited in claim 3 wherein said means for guiding the recovery apparatus comprises

a take-up wheel rotated by said reversible gears and adapted to wind up the lead line connected to the object to be recovered.

5. Apparatus as recited in claim 4 including

torque sensing means connected to said motor for detecting the torque output of said motor

and electrical switch means connected to said sensing means and in an electrical circuit with said battery and said motor for controlling the electrical power applied to said motor.

6. Apparatus as recited in claim 5 wherein

said battery comprises at least two cells and said electrical switch means has at least two positions, one

for connecting said cells in parallel and the other for connecting the cells in series.

7. Apparatus as recited in claim 6 wherein said torque sensing means comprises

means for supporting and simultaneously permitting rotation of the electric motor housing,

spring restraining means connected between the shaft of said motor and the support means for confining rotation of the electric motor housing to an amount in direct proportion to the torque on the shaft of said electric motor,

and means connected to said motor means and to said electrical switch means for changing the position of said electrical switch means whenever the torque output of the shaft exceeds a predetermined amount.

8. Apparatus as recited in claim 7 further comprising

another electrical switch connected in series with said electrical motor and said battery and being connected to and opened by said spring biased retaining means upon actuation of said last named means by said cylindrical tube.

9. Recovery apparatus for propelling itself along a guide line attached to an object and for connecting itself to the object to be recovered having a ball attached thereto and a guide line of insufficient strength to support said object connected to the ball comprising,

a self-propelled recovery apparatus having

a ball actuated locking means,

a take-up means,

a gear means,

electrical motor means,

a battery,

and a switch means;

said electrical motor means being powered by said battery and controlled by said switch means connected in an electrical circuit with the motor means and the battery means;

said gear means being operably connected to and driven by said electrical motor means for simultaneously reducing the speed and increasing the torque of the electrical motor means;

said take-up means being operably connected to and driven by said gear means for guiding said recovery apparatus along the guideline;

said ball actuated locking means completely encircling a portion of the guideline and forming a part of the recovery apparatus and having

a ball sensing means for determining the presence of said ball,

clamping means activated by said ball sensing means for clamping onto said ball,

and switch control means operatively connected to said ball sensing means and said switch means for controlling said electrical means by opening said switch means.

References Cited in the file of this patent

UNITED STATES PATENTS

2,873,997	Thomas	Feb. 17, 1959
3,003,804	Noble	Oct. 10, 1961